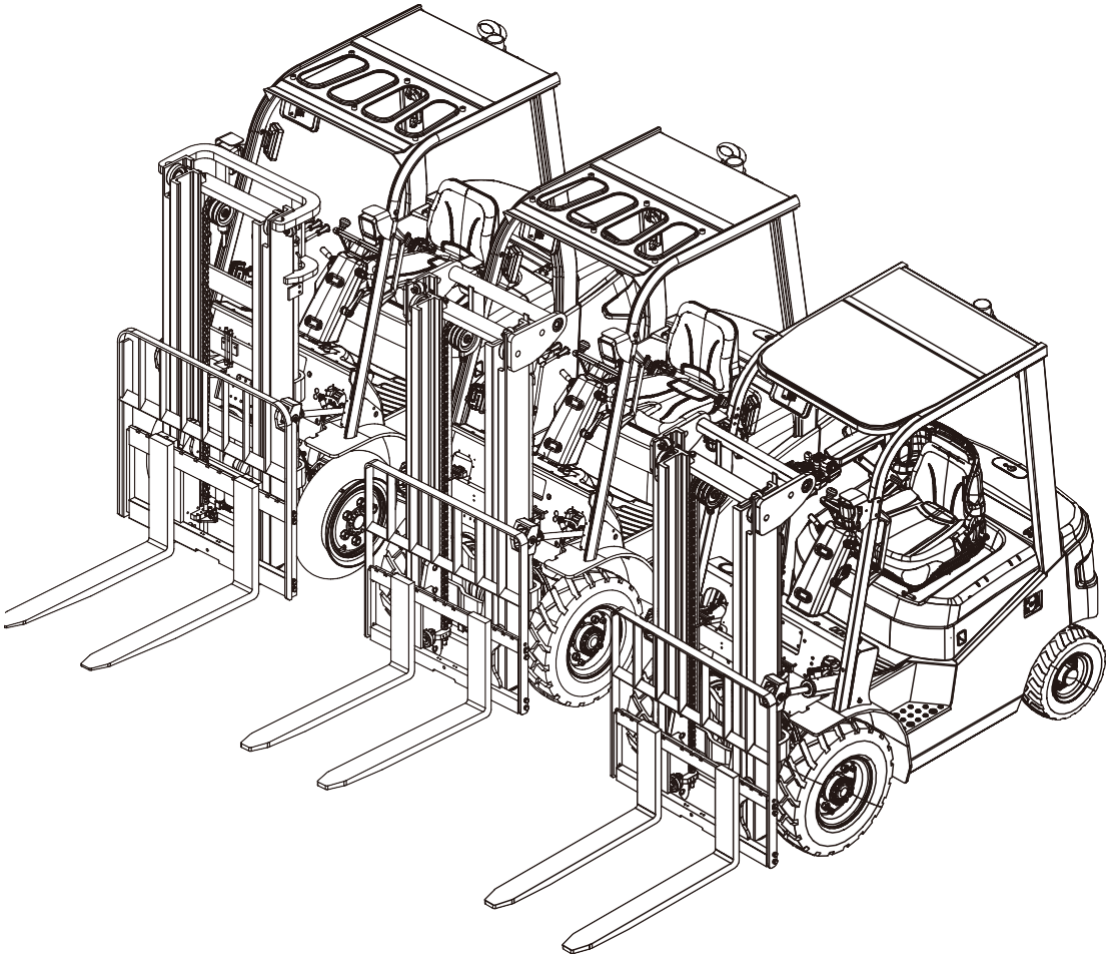

CBH 2.0
CBH 2.5
CBH 3.0
CBH 3.5

Electric Forklift Truck

Operation Manual

52549771
(en-GB)
V2 11/25

Foreword

This operation manual provides instructions to ensure the safe operation of the counterbalance lift truck. The instructions are clear and concise.

Our trucks are continuously being developed. We reserves the right to make changes to the design, equipment, and technical specifications of the system. This operation manual does not provide guarantees for specific features of the truck.

► Safety notices and text mark-ups

Safety instructions and important explanations are indicated by the following graphics:

⚠DANGER

Means that failure to comply can cause risk to life and/or major damage to property.

⚠WARNING

Please strictly adhere to these safety instructions to avoid personal injury or major damage to equipment.

⚠CAUTION

Please pay attention to the important safety instructions.

ⓘNOTE

Pay attention to Instruction.

ALL RIGHTS RESERVED

2025.11 01st EDITION

► Conformity marking

The manufacturer uses the conformity marking to document the conformity of the counterbalance lift truck with the relevant directives at the time of placing on the market:

- CE: in the European Union (EU)
- UKCA: in the United Kingdom (UK)

The conformity marking is applied to the dataplate. A declaration of conformity is issued for the EU and UK markets.

An unauthorised structural change or addition to the counterbalance lift truck can compromise safety, thus invalidating the declaration of conformity.

► Schematic views

View of functions and operations

This documentation explains the (usually sequential) chain of certain functions or operations. Schematic diagrams of a counterbalance truck are used to illustrate these procedures.

These schematic diagrams are not representative of the structural state of the documented truck. The diagrams are used solely for the purpose of clarifying procedures.

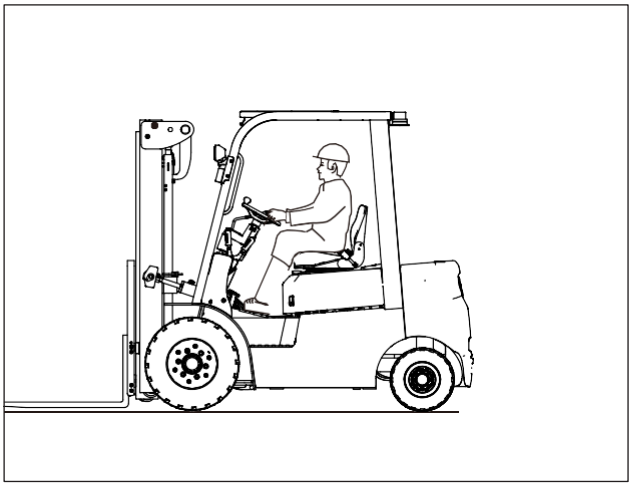

Declaration of Conformity

CE

Manufacturer

Jungheinrich AG, 22039 Hamburg, Germany

Description
Industrial truck

Type	Option	Serial no	Year of manufacture
CBH 2.0 CBH 2.5 CBH 3.0 CBH 3.5			

On behalf of

Date

EU DECLARATION OF CONFORMITY

The undersigned hereby declare that the powered truck described in detail complies with the current versions of European Directives 2006/42/EG (Machinery Directive) and 2014/30/EU (Electromagnetic Compatibility - EMC). The manufacturer is authorised to compile the technical file.

Declaration of Conformity (○)

Product:	CBH 2.0 | CBH 2.5 | CBH 3.0 | CBH 3.5 Serial number/type number
Manufacturer:	Jungheinrich Aktiengesellschaft 22039 Hamburg, Germany
UK representative:	Jungheinrich UK Ltd Sherbourne House Sherbourne Drive Tilbrook Milton Keynes MK7 8HX

Authorised to compile documentation:

The manufacturer is authorised to compile the technical documentation and its representative is authorised to make documentation available upon reasoned request for a period of at least 10 years from the date of first placement of the product on the UK market.

The manufacturer bears sole responsibility for issuance of this Declaration of Conformity.

The subject of the Declaration as outlined above satisfies the applicable UK legislation:

Supply of Machinery (Safety) Regulations 2008 No. 1597

and

Electromagnetic Compatibility Regulations 2016 No. 1091

Signed for and on behalf of:

Jungheinrich Aktiengesellschaft

Table of contents

1 GENERAL 1

1.1 Introduction 1
1.1.1 Mounting of attachments 2
1.1.2 Modification 2
1.1.3 Forklift truck handover 3
1.1.4 Permissible operating conditions 3
1.1.5 Intended uses 4
1.1.6 Impermissible uses 5

1.2 Definition of responsible persons 5
1.2.1 Drivers 5
1.2.2 Users 5
1.2.3 Specialist 5
1.2.4 User right, duties and rules of behaviour 6
1.2.5 Driver right, duties and rules of behaviour 6

2 TRUCK DESCRIPTION 7

2.1 Truck overview 7
2.1.1 Functional description 13
2.1.2 Display instrument 14
2.1.3 Standard version specifications CBH 2.0 | CBH 2.5 17
2.1.4 Standard version specifications CBH 3.0 | CBH 3.5 20
2.1.5 Dimensions 23
2.1.6 Specifications according to RED guideline (Radio Equipment Directive) for radio units 24
2.1.7 Identification points 25
2.1.8 Description - Warning sign “Correct behaviour” 32
2.1.9 Truck data plate 34
2.1.10 Load capacity plate 34

2.2 Controls, body and others 35
2.2.1 Adjust and replace forks 43
2.2.2 Seat 44
2.2.3 Travel direction lever 45
2.2.4 Mechanical lever controls 46

2.3 Related safety instruction and standard (for CE) 47

3 SAFETY 48

3.1 Safety instructions 48

3.2 Regulations for the operation of trucks 60
3.2.1 Driver authorization 60
3.2.2 Unauthorized use of truck 60
3.2.3 Damage and faults 60
3.2.4 Repairs 60
3.2.5 Hazardous area 61
3.2.6 Safety devices and warning signs 61
3.2.7 Travel routes and work areas 61
3.2.8 Driving conduct 61
3.2.9 Nature of loads to be carried 61

3.3 The structure and stability of truck 62
3.3.1 The structure of the truck 62
3.3.2 Load center 62
3.3.3 Wind loads 62

3.4 Gravity center and stability 62

4 OPERATION 65

4.1 Operator's daily checklist **65**
4.1.1 Preparing the truck for operation 65

4.2 Using the truck **66**
4.2.1 Commissioning 66
4.2.2 Environmental considerations 66
4.2.3 During running-in 66
4.2.4 Defining directions 67
4.2.5 Truck starting 67
4.2.6 Driving 67
4.2.7 Driving on ascending and descending gradients 68
4.2.8 Steering 68
4.2.9 Braking 69
4.2.10 Parking 69

4.3 Handling loads **70**
4.3.1 Adjust fork distance 70
4.3.2 Lifting loads 70
4.3.3 Transport loads 72
4.3.4 Depositing loads 72

4.4 Transport **73**
4.4.1 Location for lifting and/or slinging points 73
4.4.2 Securing the truck for transport 74
4.4.3 Towing 75

4.5 Battery and charger **76**
4.5.1 Information for battery and charger 76
4.5.2 Safety regulations for charging the battery 78
4.5.3 Charging Procedure with integrated charger (only CBH 2.0) 81
4.5.4 Charging procedure with external charger 84
4.5.5 Battery removal and installation 85

4.6 Cleaning **90**
4.6.1 Cleaning the truck 90
4.6.2 Cleaning the electrical system 91
4.6.3 Cleaning load chains 91

5 MAINTENANCE **92**

5.1 Operational safety and environmental protection **92**

5.2 Maintenance safety regulations **92**

5.3 Servicing and inspection **94**
5.3.1 Operator 94
5.3.2 Specialist (Service technician) 96
5.3.3 Periodic replacement of safety-critical parts 98

5.4 Lubrication points **99**
5.4.1 Lubricant chart 99
5.4.2 Lubricant table 101

5.5 Maintenance instructions **106**
5.5.1 Servicing wheels and tyres 112
5.5.2 Restoring the truck to service after maintenance and repairs 116

5.6 Decommissioning the trucks **116**
5.6.1 Prior to decommissioning 116
5.6.2 Daily storage 117
5.6.3 Long-term storage 117
5.6.4 Final decommissioning, disposal 118

5.7 Restoring the truck after decommissioning **118**
5.7.1 Procedure 118

6 TROUBLESHOOTING 119

7 LITHIUM BATTERY 123

7.1 Lithium battery use and maintenance 123

7.2 Special lithium-ion safety rules 123
7.2.1 Intended use 124
7.2.2 Reasonably foreseeable misuse 124
7.2.3 Accessories 124
7.2.4 BMS (Battery Management System) 124
7.2.5 Battery usage guidelines and manufacturer compliance 125

7.3 Warning indications 125
7.3.1 Labelling for lithium-ion battery maintenance instructions 128

7.4 Potential hazards 128
7.4.1 Physical damage: 128
7.4.2 Short circuits: 128
7.4.3 Temperature effects 129
7.4.4 Examples of where to store a non-functional battery 129
7.4.5 Fire hazard 129
7.4.6 Material discharge 130

7.5 Touch voltage hazard 130

7.6 Battery featuring circular meter 131

7.7 Battery Data plate 132

7.8 Information on the conformity of lithium-ion batteries 133

7.9 Lithium-ion battery routine inspection 133

7.10 Instructions on faulty batteries inspection 133

7.11 Checking batteries for signs of malfunction 134

7.12 Hazard of faulty or discarded battery and recycle 134

7.13 Charging 135

7.14 Storage 136

7.15 Transportation 137
7.15.1 Shipping faulty batteries 138

7.16 Instructions for disposal 138

7.17 Common Problems and Solutions 139

7.18 Service 139
7.18.1 Cleaning 139
7.18.2 Optimize Battery Life 139
7.18.3 Maintenance table 140

NOTE

The appendix contains further manufacturer documentation (e.g. for the batteries, chargers and attachments).

1 General

1.1 Introduction

This counterbalance lift truck is designed for lifting and transporting loads. Always follow the instructions provided in this manual when operating, using, or maintaining the truck. Any other use may result in personal injury or damage to equipment and property. Never overload the truck with unbalanced or excessive loads. The maximum permissible load is specified on the truck's **data plate** or load capacity plate.

Any use beyond the defined scope is prohibited and may result in harm to personnel, damage to the truck, or other property. All **data plates** and safety labels must be kept clean and clearly visible at all times.

This truck is equipped with an LFP lithium-ion battery that **prevents** self-ignition and ensures safe operation. Compared to diesel-powered forklifts, it can reduce energy consumption by 30% to 50% due to its lithium-ion technology.

⚠ WARNING

Moving of a connected industrial truck with the mains socket switched off.

If an industrial truck is being charged at an external mains socket, the automatic immobiliser detects this process and deactivates the truck travel functions. When charging an industrial truck at a mains socket that can be switched off, the industrial truck can start moving when the socket is switched off because the immobilizer detects only live mains sockets. This can cause damage to the electrical building installation as well as electric shocks and electrically induced fires.

- Before commissioning the truck, disconnect the mains cable from the mains socket and stow away in the designated position on the truck.
- If no additional protective measures have been taken [1)], do not charge the industrial truck at a mains socket that can be switched off.
- This warning must be taken into account by the operating company when analysing the risk.

[1] *One possible protective measure is the optional equipment "plug detection, Interlock-function".*

1.1.1 Mounting of attachments

The mounting or installation of any attachments which will interfere with, or supplement, the functions of the truck is permitted only after written approval by the manufacturer has been

obtained. If necessary, the approval of local authorities has to be obtained. Any approval obtained from local authorities does not, however, make the approval by the manufacturer unnecessary.

Check that loads are handled safely before commissioning a truck with attachments. It may be necessary to make adjustments, depending on the type of attachment, e.g. to pressure settings or adjusting stops and operating speeds.

1.1.2 Modification

Unauthorized modifications to the truck may result in serious injury or death.

Do not remove, disable, or modify any safety devices or protective components. This includes, but is not limited to, alarms, lights, mirrors, overhead guards, and load backrest extensions. If equipped, the overhead guard provides protection against falling objects but cannot offer complete protection in all situations.

Exception: A modification or alteration to a powered truck may only be carried out by the user if the original manufacturer is no longer in business and there is no legal successor. In such cases, the user must ensure that:

a) The modification or alteration is designed, tested, and implemented by a qualified engineer with expertise in counterbalance lift trucks and related safety standards.

b) A permanent record is maintained, documenting the design, testing, and implementation of the modification or alteration.

c) Necessary updates are made to the load capacity plate(s), warning labels, identification tags, and the instruction manual.

d) A permanent and clearly visible label is affixed to the truck, stating:

- The nature of the modification or alteration
- The date it was performed
- The name and address of the person or organization that carried out the work

1.1.3 Forklift truck handover

To avoid the inconvenience of making a claim after use, check the forklift truck is in perfect condition and repair and confirm your satisfaction with the vehicle on the manufacturer's product qualification certificate upon handover.

1.1.4 Permissible operating conditions

- Suitable for indoor and outdoor use.
- Maximum permissible operating altitude: up to 2000 m.
- Minimum ambient temperature under normal outdoor conditions during operation: −20 °C.
- Average ambient temperature during continuous operation: +25 °C.
- Maximum ambient temperature for short-term operation (≤ 1 hour): +40 °C.
- Minimum ambient temperature under normal indoor conditions during operation: +5 °C.
- Maximum relative air humidity: 95 % (non-condensing).
- Do not drive across or diagonally on inclines.
- Transporting loads downhill is prohibited.
- When driving on an incline, the maximum permissible gradient is:
  - Below A % when fully loaded
  - Below B % when unloaded
    (Refer to the "Gradeability" section in the Standard Version Specifications for exact values A and B.)
- IPX4 waterproof rating.

NOTE

Conditions of operation road surface: the truck should run on solid, flat, level and paved road surfaces (including both running and lifting).

NOTE

The forklift may only be operated temporarily in low-temperature environments (−20 °C to 0 °C), as the permissible battery operating temperature ranges from 0 °C to 40 °C. For prolonged use in cold storage or low ambient temperatures, special precautions must be taken to protect the truck and battery system.

The lithium-ion battery has specific temperature requirements for charging and discharging:

- *Charging temperature range: 0 °C to 40 °C*
  Charging below 0 °C (especially high-rate charging) may damage the battery.
  We recommend a charging temperature range of 5 °C to 40 °C.
- *Discharging temperature range: −20 °C to 55 °C*
  At low ambient temperatures (−20 °C to 0 °C), the discharge capacity will be reduced compared to operation at moderate temperatures. This is a normal effect.
- *Prolonged battery operation at temperatures between 40 °C and 60 °C may accelerate internal aging and reduce the battery's overall service life.*
- *For this reason, we recommend a continuous working temperature range of 0 °C to 40 °C.*
- *Optimal operating temperature range: 15 °C to 35 °C*

⚠ WARNING

Operating the truck under extreme conditions can result in malfunctions and accidents. Special equipment and authorization are required if the truck is to be used in extreme conditions, especially in dust-laden or corrosive environments. Operation in explosive atmospheres is not permitted.

1.1.5 Intended uses

- The counterbalance lift truck is intended exclusively for lifting and transporting loads as indicated on the load capacity plate.
- Any damage or defect to the truck or its attachments must be reported immediately to a supervisor. Defective equipment must not be used until it has been properly repaired.
- Safety devices and switches must not be removed, disabled, or rendered inoperative.
- System settings may only be changed with the manufacturer's approval.
- Transport is permitted only in areas explicitly approved by the user or their authorized representative. Loads must be deposited or stored **only in designated locations**.
- Inclines used by counterbalance lift trucks must:
  - Not exceed the maximum gradients specified by the manufacturer.
  - Have a sufficiently rough surface to ensure traction.
- Hazardous areas along driving routes must be clearly marked or secured using standard traffic signs and additional warning signs, where necessary.
- Driving routes must be:
  - Properly paved, level, and free of obstacles
  - Equipped with ramps over drainage channels, railway tracks, etc., if required, to ensure smooth passage
- Compliance with EU Directive 89/654/EEC (Minimum Health and Safety Requirements for the Workplace) is mandatory. For countries outside the EU, applicable national regulations must be observed.
- When operating on public roads, national traffic laws must be followed, including any seasonal restrictions (e.g. for winter conditions).
- The user is responsible for ensuring that adequate fire protection measures are in place in the truck's vicinity.
- The truck may only be used for **towing trailers** if specifically approved for this purpose by the manufacturer. In such cases:
  - The maximum towing load defined in the operator's manual must not be exceeded
  - Braking systems of the truck and trailer must function together reliably
  - Driving and braking characteristics must not be impaired

1.1.6 Impermissible uses

The user or driver, and not the manufacturer, is liable if the truck is used in a manner that is not permitted. The following list is exemplary and is not intended to be exhaustive.

- Do not stack loads or turn when driving on a ramp.
- Never park the truck in a place that may obstruct fire extinguishers, fire escapes or aisles.
- Do not leave the truck unattended when the load is raised.
- Do not stand on the fork arms when raised.
- Do not increase the truck's load capacity, e.g. by attaching an additional weight.
- Follow safety instruction (Refer to Page 48 Section “Safety Instructions”).

1.2 Definition of responsible persons

1.2.1 Drivers

This truck may only be operated by persons who are authorized in accordance with applicable national regulations. Operators must be properly trained in the use of counterbalance lift trucks, must have demonstrated their ability to operate and handle loads to the employer or an authorized representative, and must have received instructions specific to the truck in use.

1.2.2 Users

A user is a natural person or legal entity responsible for the truck. The user may operate the truck themselves or delegate the task of operating the truck to someone else (e.g., a

driver/operator). In specific circumstances, such as leasing, responsibility will be borne by the user according to the effective contract between the owner of the vehicle and the personnel operating the truck.

1.2.3 Specialist

A qualified person is defined as a service engineer or a person who fulfils the following requirements:

- A completed vocational qualification that demonstrates their professional expertise, such as a vocational certificate or a similar document.
- Professional experience indicates that the qualified person has gained practical experience of counterbalance lift trucks over a proven period during their career. During this time, this person has become familiar with a wide range of symptoms that require checks to be carried out, such as based on the results of a hazard assessment or a daily inspection
- Recent professional involvement in the field of the counterbalance lift truck test in question and an appropriate further qualification are essential. The qualified person must have experience of carrying out the test in question or of carrying out similar tests.

Moreover, this person must be aware of the latest technological developments regarding the counterbalance lift truck to be tested and the risk being assessed

1.2.4 User right, duties and rules of behaviour

Everyone operating the truck has read and understood this manual and has been approved in the relevant truck operator training. Operate the truck in a safe manner to avoid endangering the lives and health of the driver and/or others. Adhere to all warnings and instructions in this manual. This manual is available for use by drivers/operators.

1.2.5 Driver right, duties and rules of behaviour

For the purposes of the present operating instructions, the operating company is defined as any natural or legal person who either uses the truck himself, or on whose behalf it is used. In special cases (e.g. leasing or renting) the operating company is considered to be the person who is to carry out the specified operational duties in accordance with existing contractual agreements between the owner and operator of the counterbalance lift truck.

The operating company must ensure that the truck is used only for its intended purpose and that dangers to the health and safety of the operator and third parties are prevented. Further more, accident prevention regulations, safety regulations and operating, servicing and repair guidelines must be followed. The operating company must ensure that all operator have read and understood these operating instructions.

2 Truck Description

2.1 Truck overview

► **Truck components (CBH 2.0)**

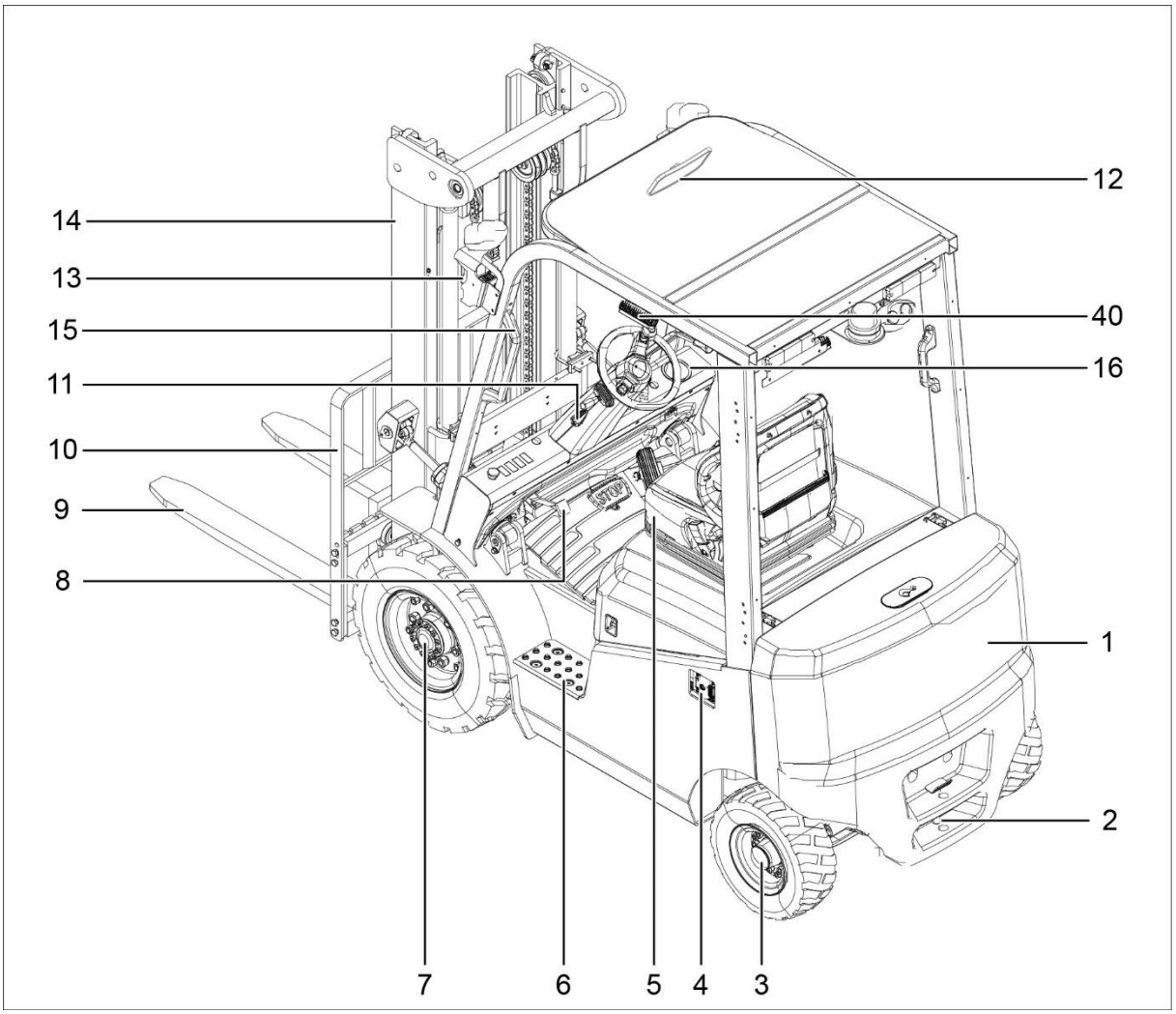

1	Counterweight	10	Load backrest
2	Towing pin	11	Steering column tilting angle adjuster
3	Steer wheels	12	Rearview mirror
4	Charging port	13	Headlights
5	Seat	14	Mast
6	Safety step	15	Handrail
7	Driving wheel	16	Cup holder
8	Parking brake pedal	40	Red light (optional equipment)
9	Fork arms		

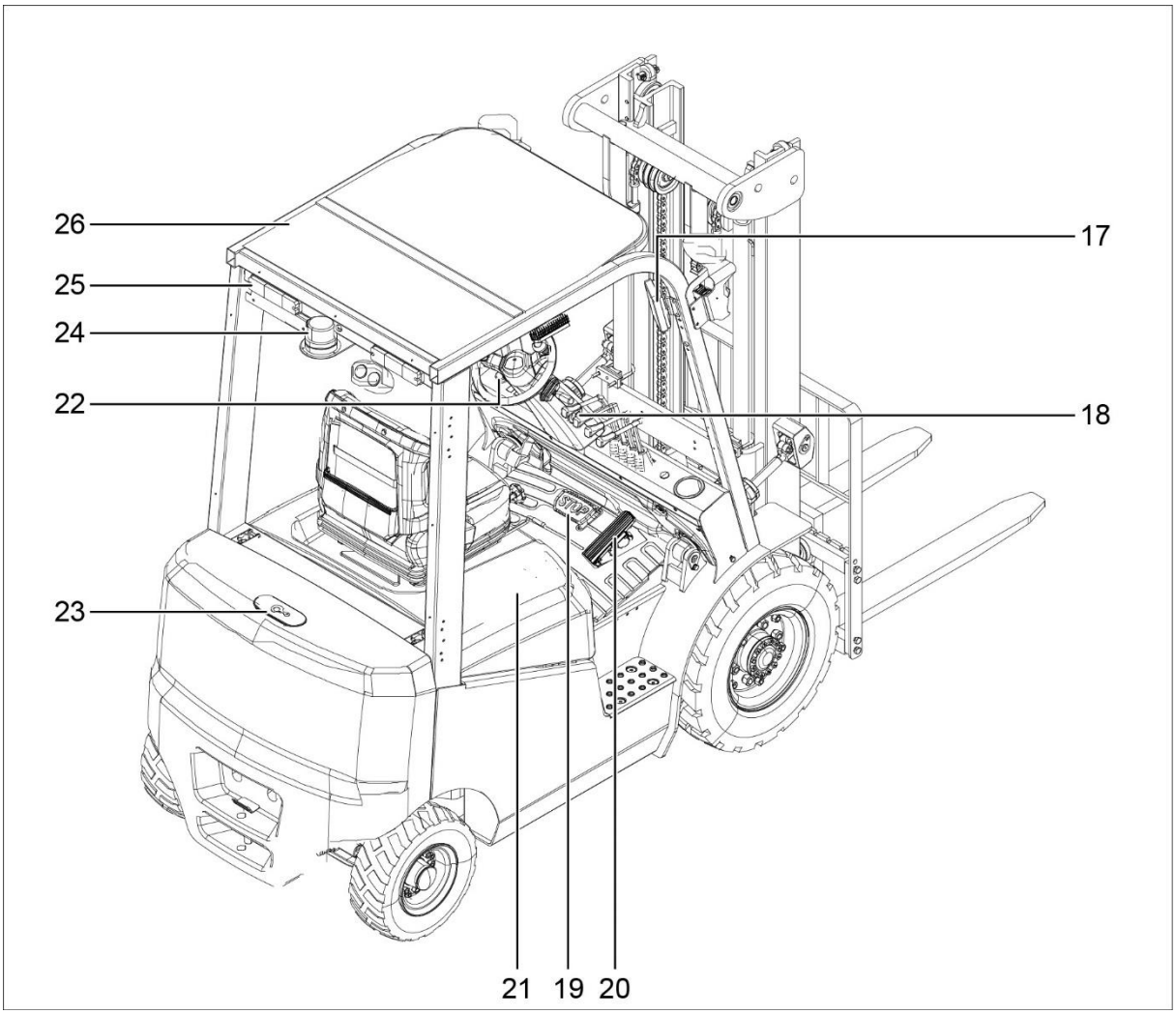

17	Display	22	Emergency stop switch
18	Key switch	23	Sling point
19	Brake pedal	24	Caution light
20	Accelerator pedal	25	Rear combination lights
21	Battery hood	26	Overhead guard

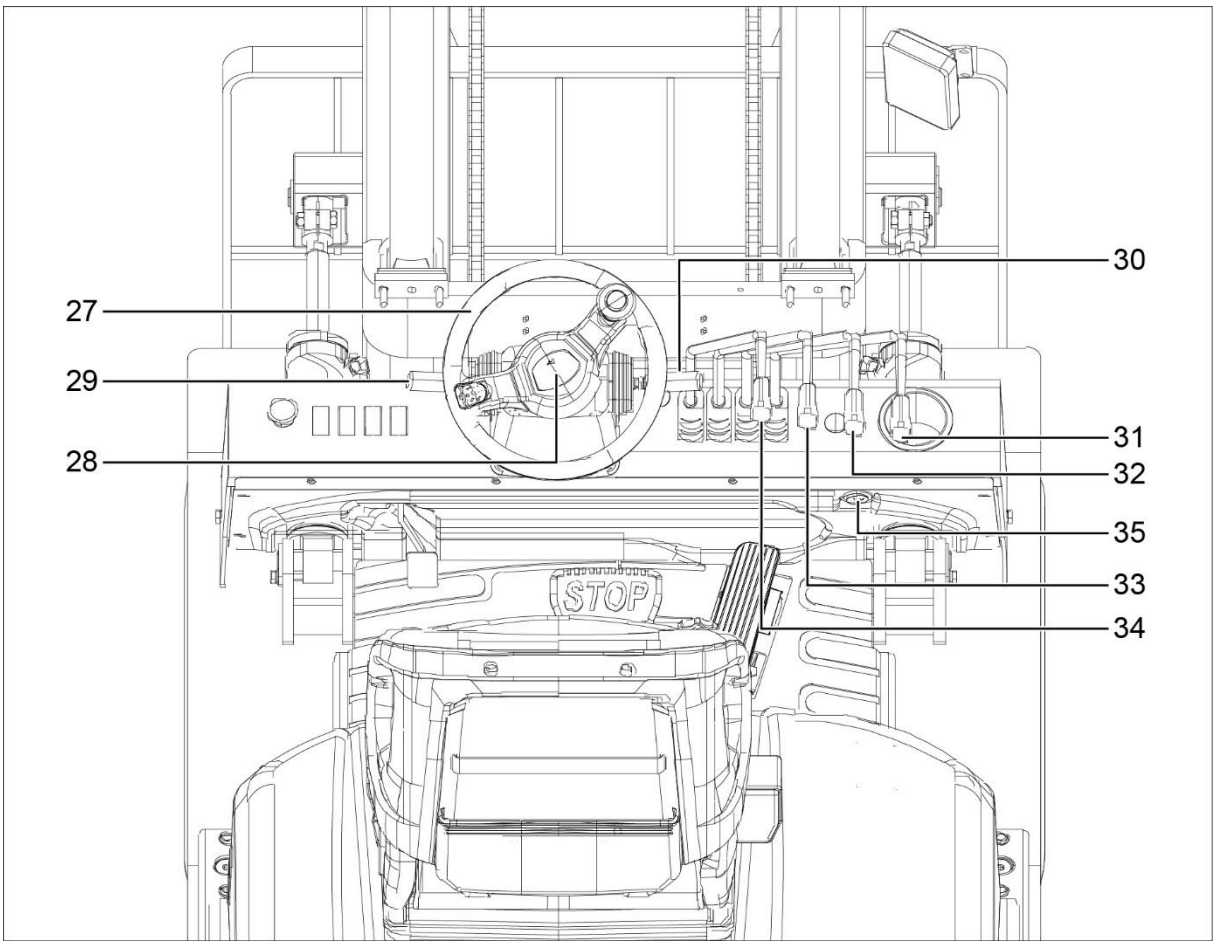

27	Steering wheel	32	Sideshifter lever
28	Horn button	33	Tilting lever
29	Travel combination switch	34	Lifting lever
30	Combination light switch	35	USB 5V/3.1A
31	Attachment lever		

► **Truck components (CBH 2.5 | CBH 3.0 | CBH 3.5)**

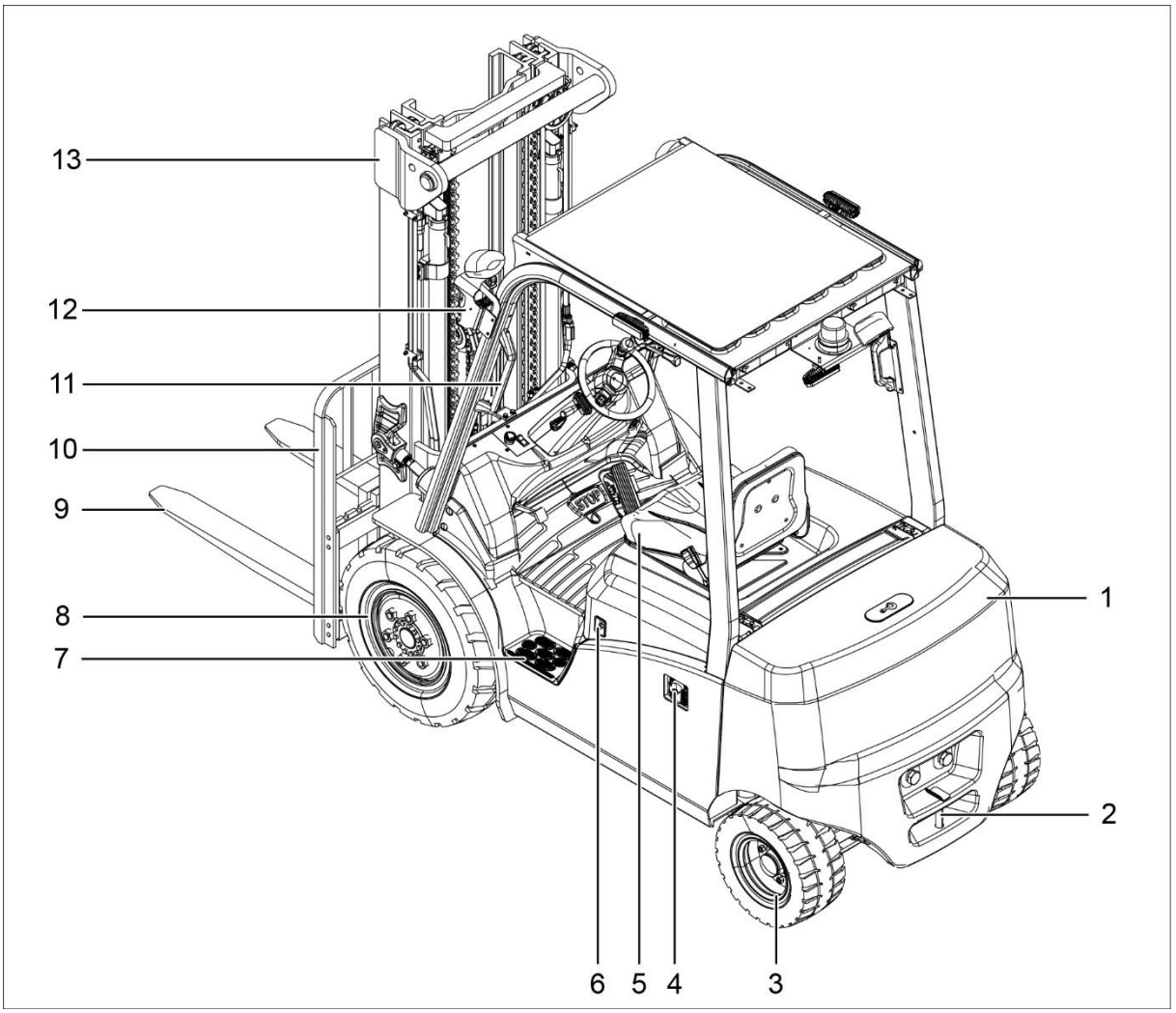

1	Counterweight	8	Driving wheels
2	Towing pin	9	Fork arms
3	Steer wheels	10	Load backrest
4	Charging port	11	Handrail
5	Seat	12	Headlight
6	Opening seat switch	13	Mast
7	Safety step		

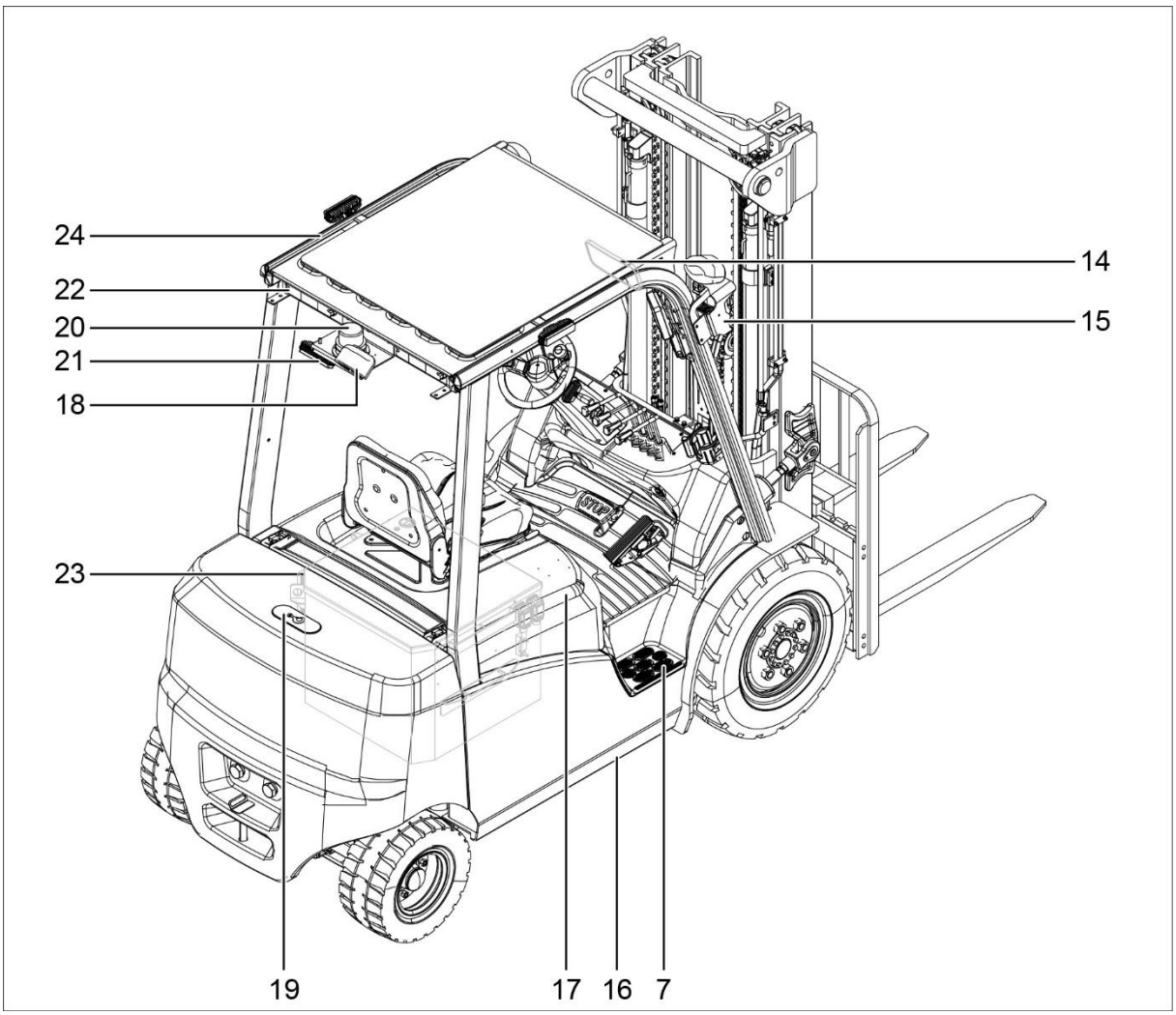

7	Safety step	19	Sling point
14	Rearview mirror	20	Caution light
15	Headlight	21	Red light (optional equipment)
16	Chassis	22	Rear combination lights
17	Battery hood	23	Battery
18	Blue light (optional equipment)	24	Overhead guard

► **For truck adopted mechanical valve**

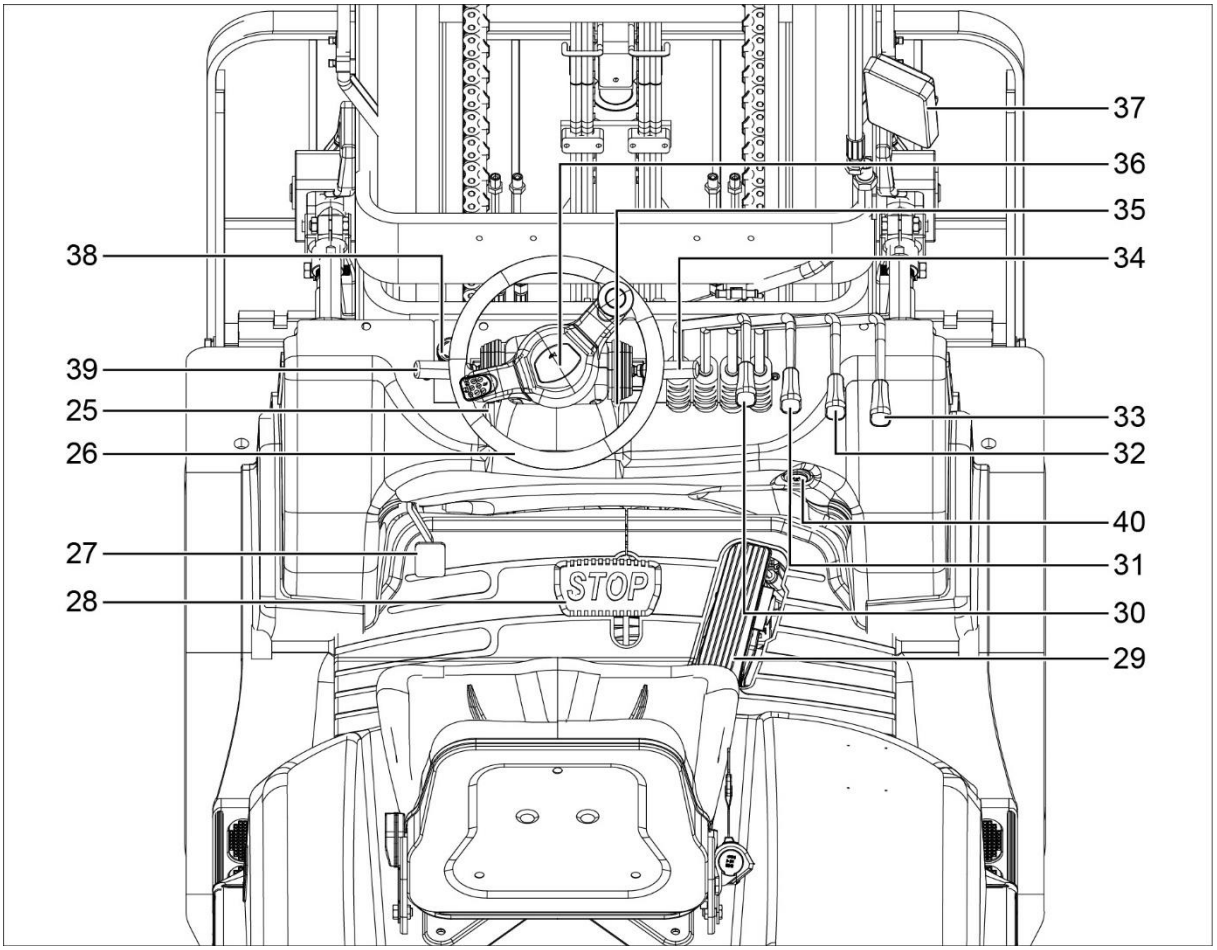

25	Steering column tilting angle adjuster	33	Attachment lever
26	Steering wheel	34	Combination light switch
27	Parking brake pedal	35	Key switch
28	Brake pedal	36	Horn button
29	Accelerator pedal	37	Display Instrument
30	Lifting lever	38	Emergency stop switch
31	Tilting lever	39	Travel Combination Switch
32	Sideshifter lever	40	USB 5V/3.1A

2.1.1 Functional description

- **Chassis**

  The chassis, together with the counterweight, forms the load-bearing base structure of the counterbalance lift truck. It supports all major components of the vehicle.

- **Operator position and overhead guard**

  The overhead guard is available in different versions and protects the operator against falling objects and external impacts.

  All controls are ergonomically arranged.

  The steering column and driver's seat are individually adjustable.

  Control and display units enable real-time monitoring during operation, ensuring a high level of safety.

- **Steering**

  The hydraulic steering system offers high efficiency and ergonomic handling.
  The height and tilt of the steering column can be adjusted to suit various operators.
  The low dashboard design ensures maximum legroom.
  Smooth steering operation improves handling and helps reduce overall energy consumption.

- **Wheels**

  The truck is equipped with either super-elastic tires.

- **Drive and brake system**

  The drive system consists of a drive axle assembly, reduction gearbox, traction motor, and wheels. Power is supplied by a battery.
  The front-wheel drive provides consistent traction under all operating conditions.
  The braking system includes:

  - Service brake: activated hydraulically by foot.
  - Parking brake: mechanically applied by foot or hand.

  Both braking systems act on a wet disc brake integrated in the wheel hub transmission of the drive axle.

- **Hydraulic system**

  A multi-pilot valve ensures sensitive control of all hydraulic functions via the control levers.
  A speed-controlled hydraulic pump provides efficient and proportional hydraulic power supply.

- **Mast**

  The truck is equipped with a two or three-stage telescopic mast.
  The narrow mast profiles ensure excellent visibility of the forks and attachments.
  The fork carriage and mast rollers are permanently lubricated, providing maintenance-free operation.

- **Attachments**

  Trucks can be equipped with mechanical or hydraulic attachments, depending on the application.

2.1.2 Display instrument

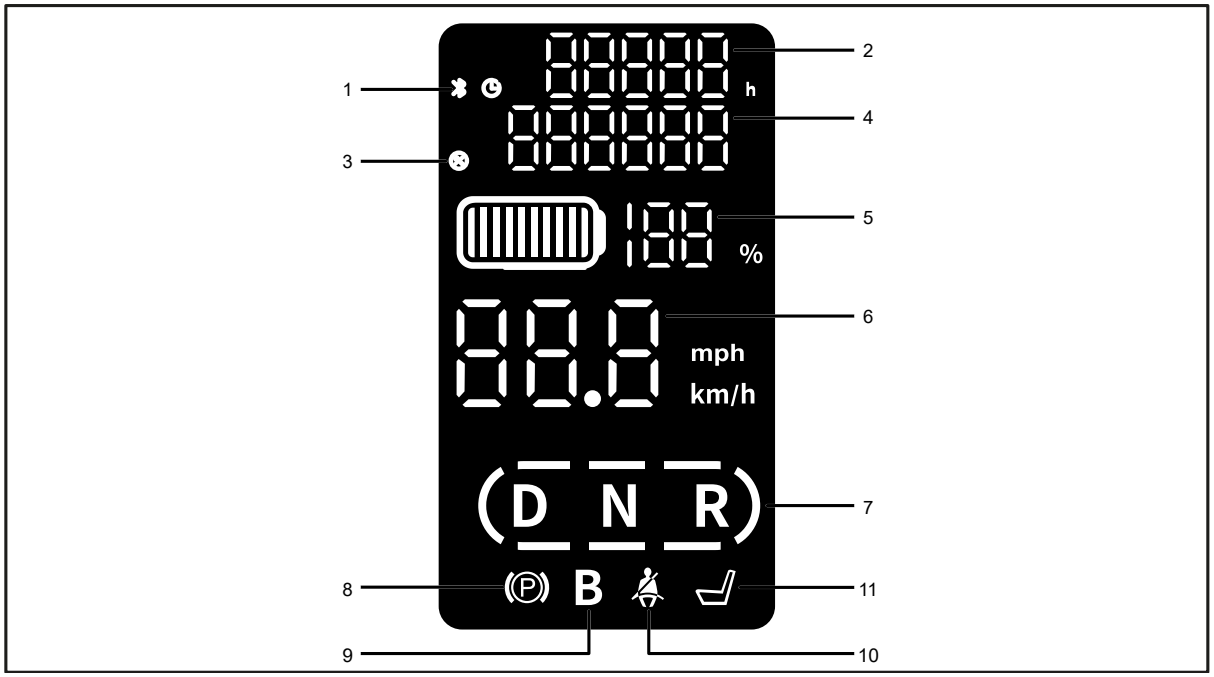

ITEM	EXPLANATION	ICON
1	Indicates active Bluetooth connection. *This function is reserved for the manufacturer's customer service.*	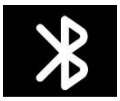
2	Display full working hours. The blue light will light up when the Bluetooth is connected and will go out when the connection is lost.	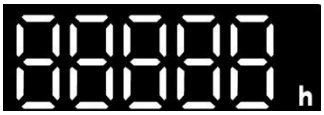
3	Fault Indicator.	
4	Displays the fault code when a fault occurs, and LED "Fault Indicator" (3) will illuminate.	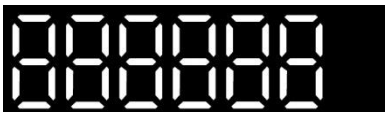
5	Displays the remaining battery charge as a percentage. The value on the right is the percentage of electric capacity, and the number of electric capacity bars (0-10 bars) on the left is different according to the remaining electric capacity.	

ITEM	EXPLANATION	ICON
6	Displays the current travel speed. The right side is the speed unit, which can be changed to mph or km/h according to customer requirements.	
7	Indicates current drive direction: • N = Neutral (no direction selected) • D = Drive (forward) • R = Reverse	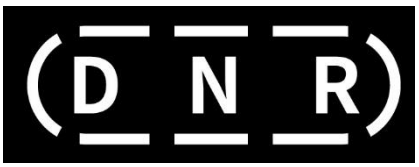
8	Parking brake indicator: • This lamp lights up when the parking brake is applied.	
9	Service brake indicator: • This lamp lights up when the service brake is engaged.	
10	Safety belt indicator: • This lamp lights up if the driver is not wearing the seat belt. • The seat belt is not fastened	
11	Seat indicator: • This lamp lights up when the driver leaves the seat, indicating that the operator is not seated as required.	

► Drive Modes

This truck is equipped [2)] with selectable performance drive modes on the LED display. These can be toggled by touching and holding “N”. The current drive mode is shown in the original “N” position on the display.

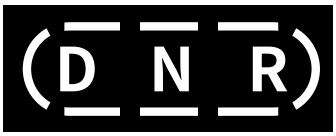

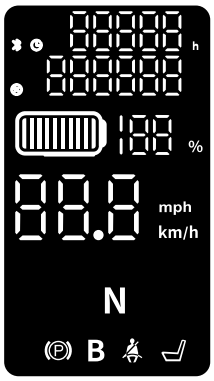

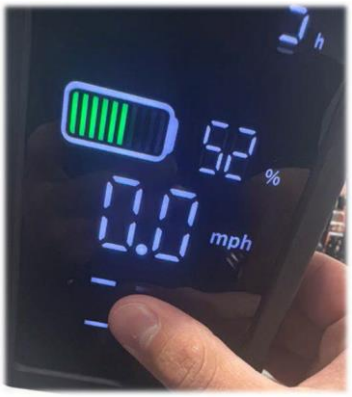

Mode Definition
There are three selectable drive modes: “E”, “S”, “P”. These modes can also be customized but it requires dealer or factory support.

- “E” mode (“Eco” Energy Efficient)
  white bar on
  - Lowest travel speed
  - Lowest acceleration rate
  - Lowest lift speed

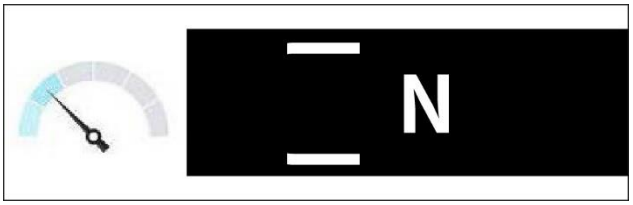

- “S” mode (“Standard”):
  white and green bars on
  - Max travel speed
  - Medium acceleration rate
  - Max lift speed

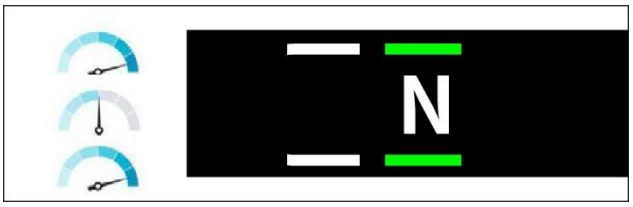

- “P” mode (“Performance”):
  white, green and red bars on
  - Max travel speed
  - Max acceleration rate
  - Max lift speed

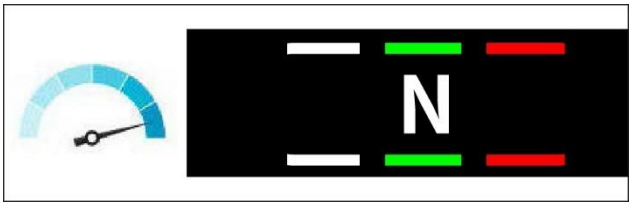

[2] If your truck display shows a dotted oval around the “N”, the truck does not have the selectable performance drive mode feature.

2.1.3 Standard version specifications CBH 2.0 | CBH 2.5

Distinguishing mark					
1.1	Manufacturer			AntON	AntON
1.2	Model designation			**CBH 2.0**	**CBH 2.5**
1.3	Drive			Electric	Electric
1.4	Operator type			Seated	Seated
1.5	Load capacity	Q	kg	2000	2500
1.6	Load center distance	c	mm	500	500
1.8	Load distance, centre of drive axle to fork	x	mm	495	495
1.9	Wheelbase	y	mm	1540	1740
Service weight					
2.1	Service weight (incl. battery)		kg	3549	3977
2.2	Axle loading, laden front/rear		kg	4930/619	5795/682
2.3	Axle loading, unladen front/rear		kg	1635/1909	1865/2112
Tyres					
3.1	Tyre type			Solid rubber	Solid rubber
3.2	Tyre size, front			7.00-12	7.00-12
3.3	Tyre size, rear			18X7-8	18X7-8
3.5	Wheels, number front/rear (x=drive wheels)		mm	2x/ 2	2x/ 2
3.6	Tread width, front	b10	mm	975	975
3.7	Tread width, rear	b11	mm	955	955

Chassis					
4.1	Tilt of mast/fork carriage forward/backward	α/β	°	6/ 10	6/ 10
4.2	Retracted mast height	h1	mm	2090	2090
4.3	Free lift	h2	mm	120	120
4.4	Lift height	h3	mm	3000	3000
4.5	Height, mast extended	h4	mm	4025	4025
4.7	Height of overhead guard (cabin)	h6	mm	2165	2165
4.8	Seat height/standing height	h7	mm	1095	1095
4.12	Tow coupling height	h10	mm	310	311
4.12.1	2nd coupling height		mm	-	-
4.19	Overall length	l1	mm	3535	3695
4.20	Length to face of forks	l2	mm	2385	2545
4.21	Overall width	b1/b2	mm	1154	1154
4.22	Fork dimensions	s×e×l	mm	40×122×1150	40×122×1150
4.23	A,B Fork carriage class/type A, B			2A	2A
4.24	Fork carriage width	b3	mm	1040	1040
4.31	Ground clearance, laden, below mast	m1	mm	125	125
4.32	Ground clearance, center of wheelbase	m2	mm	150	170
4.34.1	Aisle width for pallets 1000×1200 crossways	Ast	mm	3824	3995
4.34.2	Aisle width for pallets 800×1200 lengthways	Ast	mm	4024	4195
4.35	Turning radius	Wa	mm	2129	2300
4.36	Smallest pivot point distance	b13	mm	661,5	838

Performance data					
5.1	Travel speed, laden/unladen		km/h	14/15	16/17
5.2	Lifting speed, laden/unladen		m/s	0.40/0.41	0.50/0.56
5.3	Lowering speed, laden/unladen		m/s	0.54/0.56	0.54/0.56
5.5	Drawbar pull, laden/unladen		N	2090	2270
5.6	Max. drawbar pull, laden/unladen		N	12570	13760
5.7	Gradeability, laden/undaden		%	7/14	14/25
5.8	Max. gradeability, laden/unladen		%	15/20	20/25
5.9	Acceleration time, laden/unladen		s	7.9/7.5	6.6/6.4
5.10	Service brake			Hydraulic	Hydraulic
5.11	Parking brake			Mechanical	Mechanical
Electric-engine					
6.1	Drive motor rating S2 60 min		kW	10	17
6.2	Lift motor rating at S3 15%		kW	16	26
6.4	Battery voltage/nominal capacity		V/Ah	80V / 230Ah	80V / 230Ah
6.5	Battery weight		kg	——	——
6.6	Energy consumption according to DIN EN 16796		kWh/h	6.77	7.10
6.6.1	Energy consumption according to EN cycle		kWh/h	0.115	0.118
6.7	Turnover output according to VDI 2198		t/h	116	150
6.8	Energy consumption according to line 6.7		kWh/h	5.88	6.21
Drive/lift mechanism					
8.1	Type of drive control			AC	AC
Addition data					
10.1	Operating pressure for attachments		bar	180	180
10.2	Oil volume for attachments		ℓ/min	35	35
10.5	Steering design			Hydraulic	Hydraulic
10.7	Sound pressure level at the driver's ear		dB(A)	< 74	< 74

2.1.4 Standard version specifications CBH 3.0 | CBH 3.5

Distinguishing mark					
1.1	Manufacturer			AntON	AntON
1.2	Model designation			**CBH 3.0**	**CBH 3.5**
1.3	Drive			Electric	Electric
1.4	Operator type			Seated	Seated
1.5	Load capacity	Q	kg	3000	3500
1.6	Load center distance	c	mm	500	500
1.8	Load distance, centre of drive axle to fork	x	mm	481	486
1.9	Wheelbase	y	mm	1740	1740
Service weight					
2.1	Service weight (incl. battery)		kg	4335	4644
2.2	Axle loading, laden front/rear		kg	6575/760	7355/789
2.3	Axle loading, unladen front/rear		kg	1880/2455	1870/2774
Tyres					
3.1	Tyre type			Solid rubber	Solid rubber
3.2	Tyre size, front			28X9-15	28X9-15-
3.3	Tyre size, rear			200/50-10	200/50-10
3.5	Wheels, number front/rear (x=drive wheels)		mm	2x/ 2	2x/ 2
3.6	Tread width, front	b10	mm	1010	1010
3.7	Tread width, rear	b11	mm	955	955

Chassis					
4.1	Tilt of mast/fork carriage forward/backward	α/β	°	6/ 10	6/ 10
4.2	Retracted mast height	h1	mm	2070	2070
4.3	Free lift	h2	mm	135	135
4.4	Lift height	h3	mm	3000	3000
4.5	Height, mast extended	h4	mm	4095	4095
4.7	Height of overhead guard (cabin)	h6	mm	2180	2180
4.8	Seat height/standing height	h7	mm	1110	1110
4.12	Tow coupling height	h10	mm	307	307
4.12.1	2nd coupling height		mm	-	-
4.19	Overall length	l1	mm	3712	3773
4.20	Length to face of forks	l2	mm	2562	2623
4.21	Overall width	b1/b2	mm	1210	1210
4.22	Fork dimensions	s×e×l	mm	45×122×1150	50×122×1150
4.23	A,B Fork carriage class/type A, B			3A	3A
4.24	Fork carriage width	b3	mm	1100	1100
4.31	Ground clearance, laden, below mast	m1	mm	130	130
4.32	Ground clearance, center of wheelbase	m2	mm	185	185
4.34.1	Aisle width for pallets 1000×1200 crossways	Ast	mm	4060	4114
4.34.2	Aisle width for pallets 800×1200 lengthways	Ast	mm	4260	4314
4.35	Turning radius	Wa	mm	2379	2428
4.36	Smallest pivot point distance	b13	mm	838	838

Performance data					
5.1	Travel speed, laden/unladen		km/h	16/17	16/17
5.2	Lifting speed, laden/unladen		m/s	0.42/0.5	0.42/0.5
5.3	Lowering speed, laden/unladen		m/s	0.43/0.44	0.43/0.44
5.5	Drawbar pull, laden/unladen		N	2770	3030
5.6	Max. drawbar pull, laden/unladen		N	16280	18100
5.7	Gradeability, laden/undaden		%	12/23	10/19
5.8	Max. gradeability, laden/unladen		%	20/25	18/25
5.9	Acceleration time, laden/unladen		s	6.7/6.3	6.5/6
5.10	Service brake			Hydraulic	Hydraulic
5.11	Parking brake			Mechanical	Mechanical
Electric-engine					
6.1	Drive motor rating S2 60 min		kW	17	17
6.2	Lift motor rating at S3 15%		kW	26	26
6.4	Battery voltage/nominal capacity		V/Ah	80V / 230AH	80V / 280AH
6.5	Battery weight		kg	——	——
6.6	Energy consumption according to DIN EN 16796		kWh/h	10.73	11.43
6.6.1	Energy consumption according to EN cycle		kWh/h	0.179	0.184
6.7	Turnover output according to VDI 2198		t/h	180	217
6.8	Energy consumption according to line 6.7		kWh/h	10.01	9.86
Drive/lift mechanism					
8.1	Type of drive control			AC	AC
Addition data					
10.1	Operating pressure for attachments		bar	180	180
10.2	Oil volume for attachments		ℓ/min	35	35
10.5	Steering design			Hydraulic	Hydraulic
10.7	Sound pressure level at the driver's ear		dB(A)	< 74	< 74

2.1.5 Dimensions

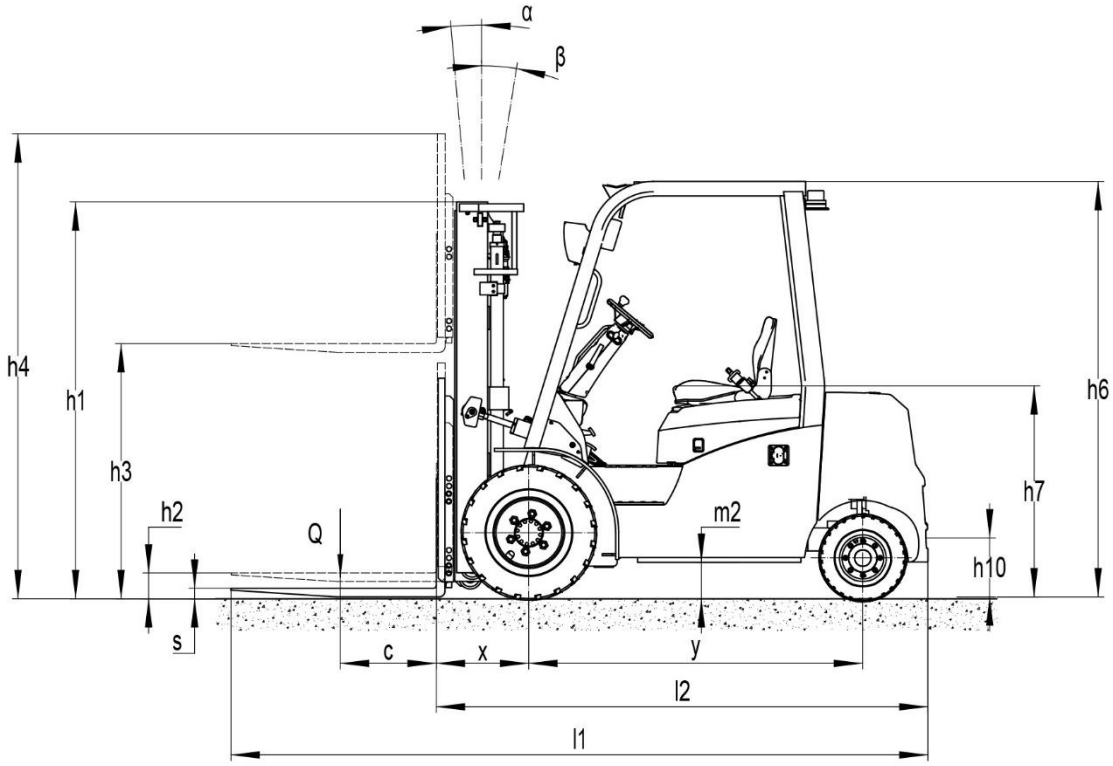

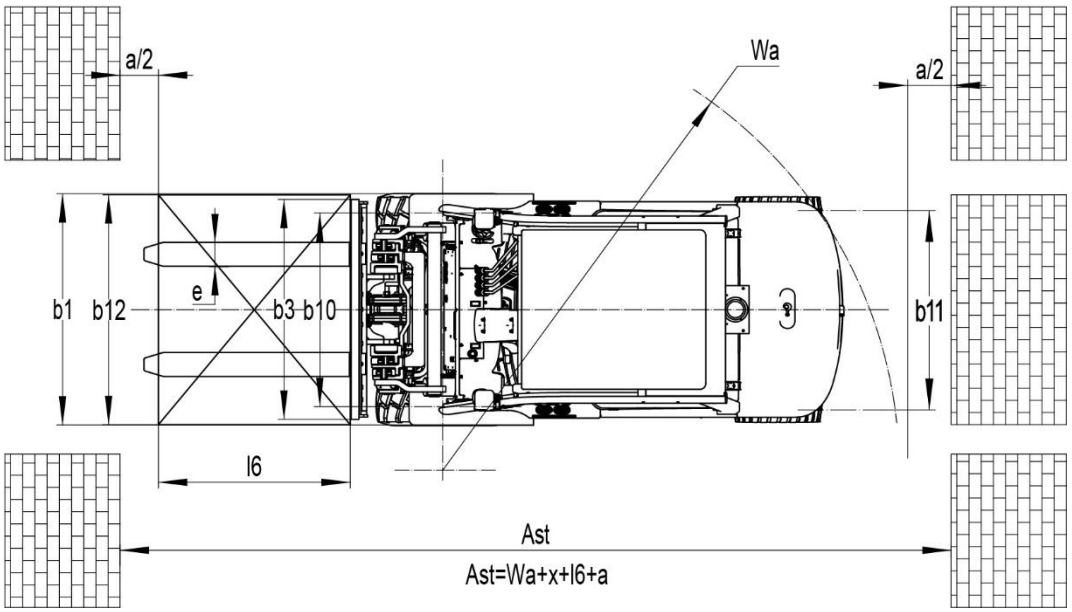

2.1.6 Specifications according to RED guideline (Radio Equipment Directive) for radio units

The table contains any components installed according to the European Directive 2014/53/EU. The table shows the affected frequency range and the emitted transmission power for each component.

Component	Frequency range	Transmission power
Display - Bluetooth	2.402 - 2.480 GHz	< 10 mW
Telematics Box	2G 900 MHz	< 3.2 W
Telematics Box	2G 1800 MHz	< 1.6 W
Telematics Box	4G 700–2600 MHz	< 316 mW
Telematics Box	GNSS 1559–1610 MHz	Receiver only

When subsequently integrating attachments into the truck, remember that the rules on interference must be observed.

2.1.7 Identification points

▶ **CBH 2.0 – 3.5**

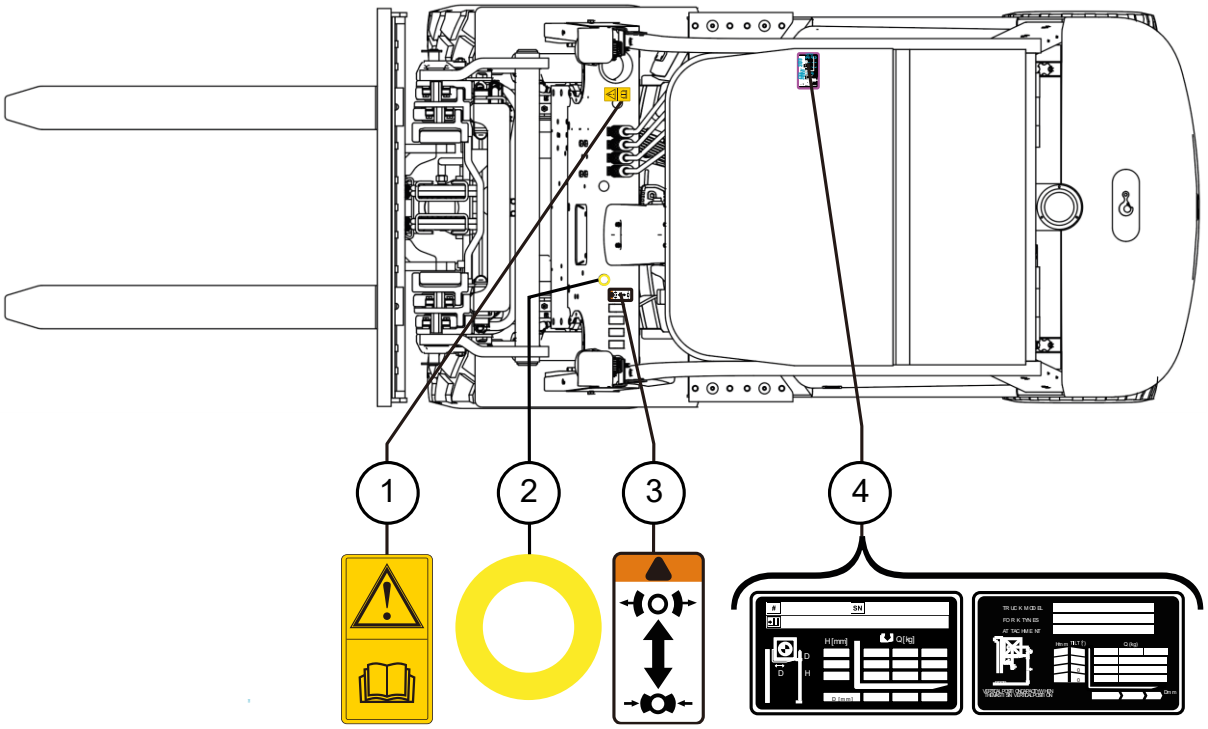

Item	Description
1	Read the “Instruction handbook” before operation
2	Emergency stop switch
3	Parking brake label Load capacity plate
4	Load capacity plate, see page 34.

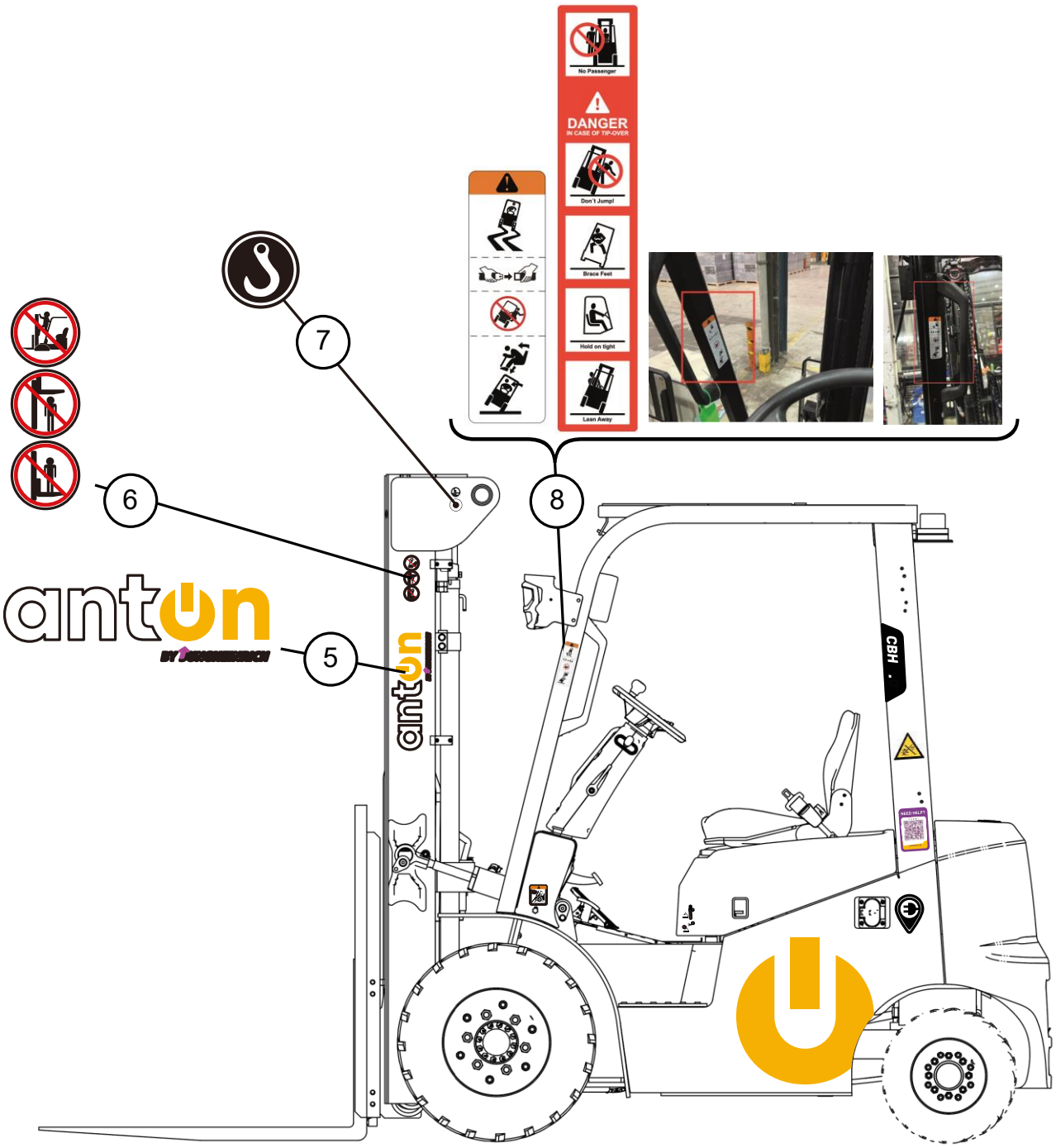

Item	Description
5	AntON logo B
6	Before operation: • Never climb the masts. • Never permit anyone to walk or stand under upraised forks or attachments. Do not allow anyone to stand on the forks.
7	Use a hoist lift the truck via sling point. Sling point position see the sling point label of the truck. Please refer to our electronic version operation manual for during hoisting.
8	Warning sign “Correct behaviour”, see page 32.

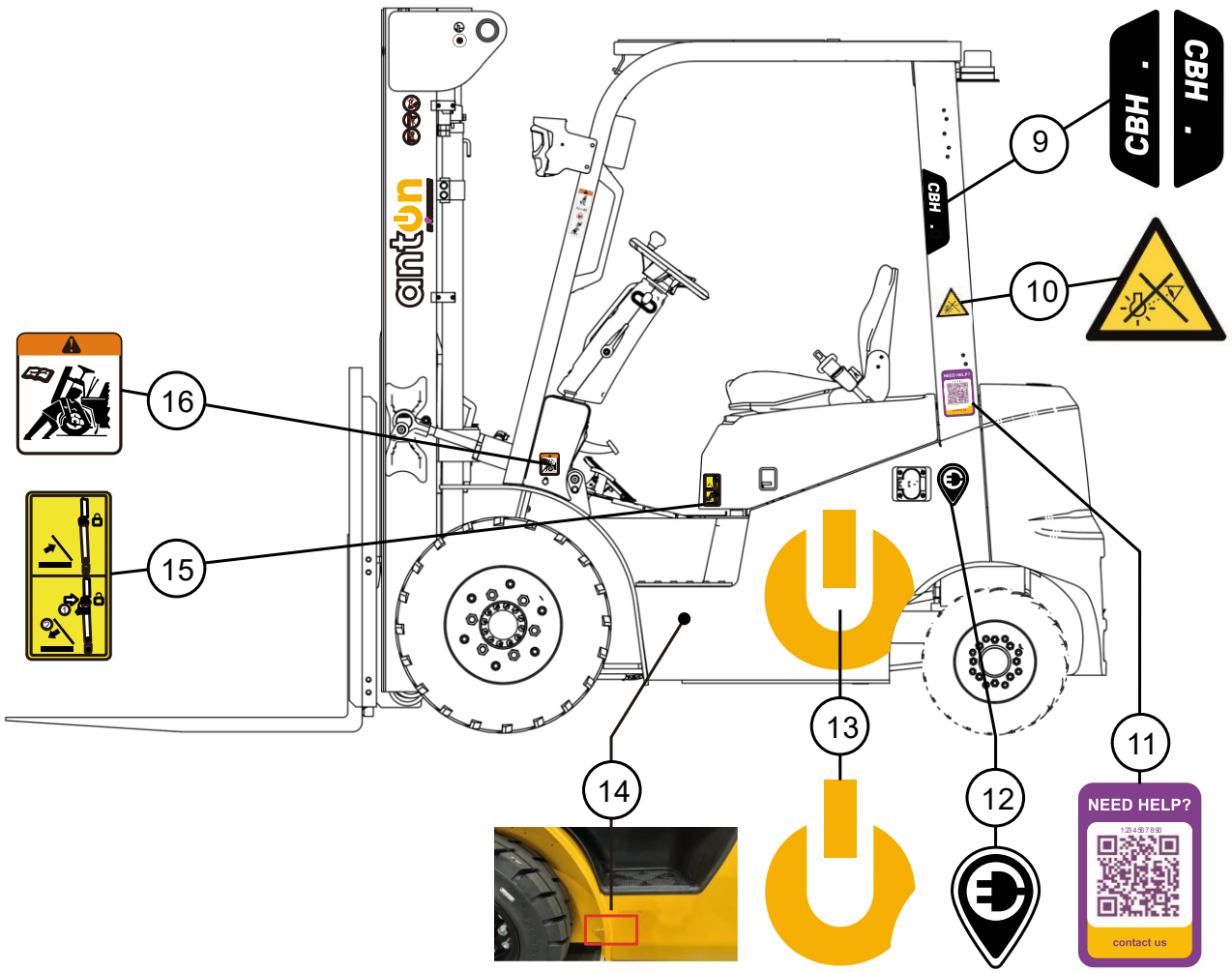

Item	Description
9	Type designation
10	Do not look directly at the blue light
11	QR code
12	Charging indicator
13	AntON logo A
14	Serial No.
15	Gas spring indicator
16	In the run-in period - after approx. 100 service hours - or after repair work, the owner must check the wheel nuts/bolts and re-tighten if necessary.

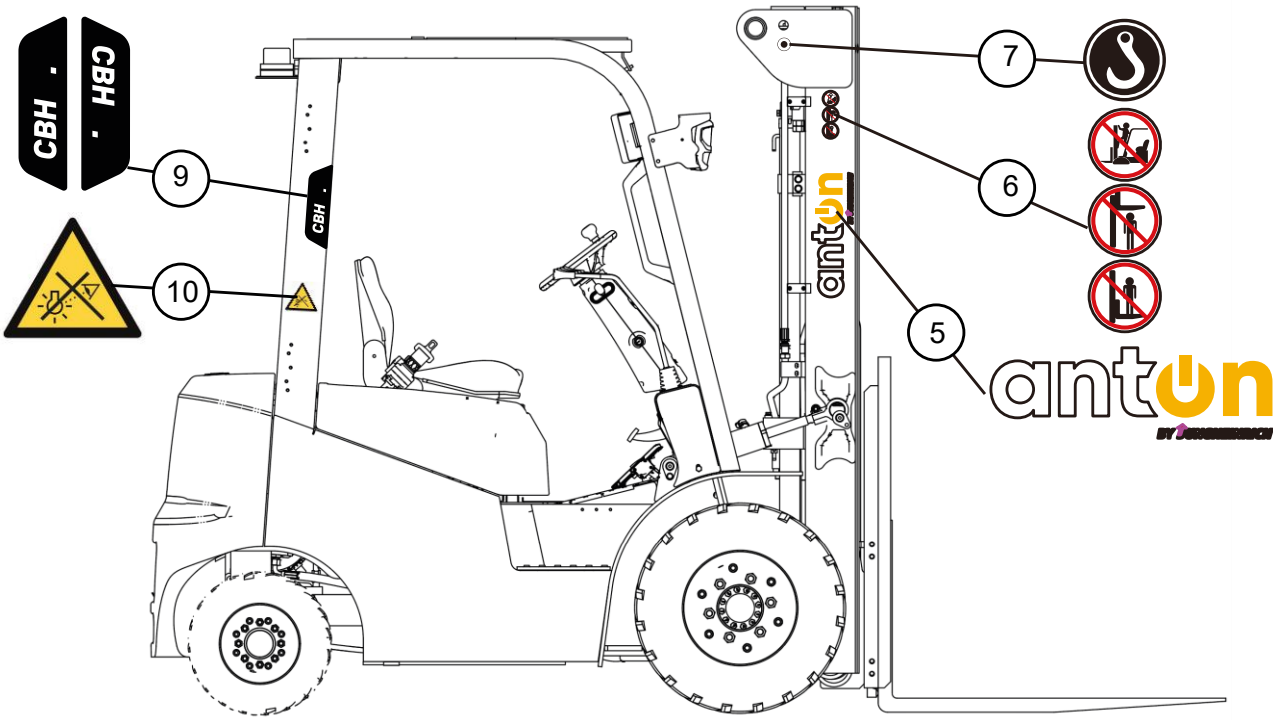

Item	Description
5	AntON logo B
6	Before operation: • Never climb the masts. Never permit anyone to walk or stand under upraised forks or attachments. Do not allow anyone to stand on the forks.
7	Use a hoist lift the truck via sling point. Sling point position see the sling point label of the truck. Please refer to our electronic version operation manual for during hoisting.
9	Type designation
10	Do not look directly at the blue light

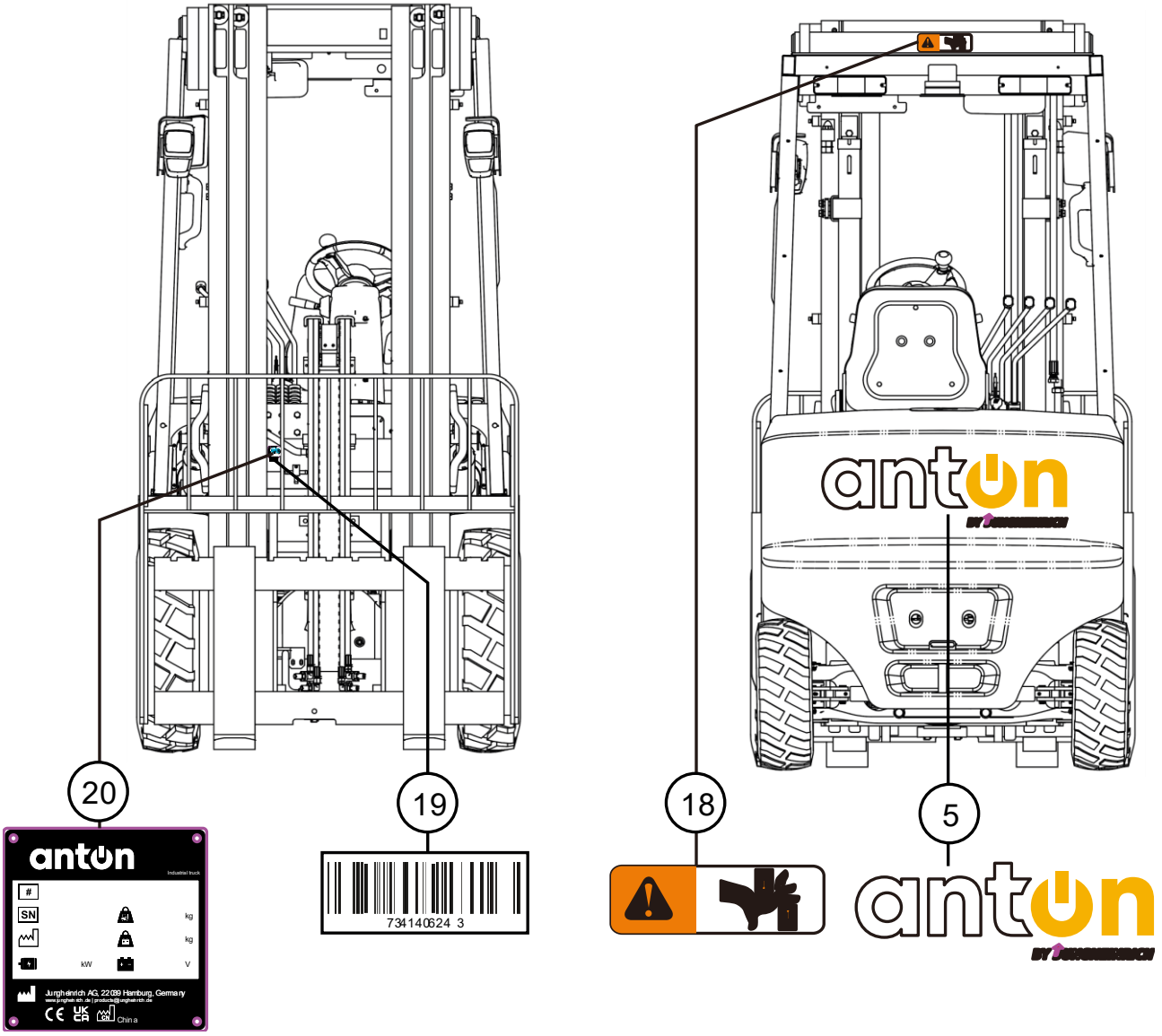

Item	Description
5	AntON logo B
18	Risk of serious injury or death due to entrapment. Never place your hands in between the inner and outer masts.
19	Serial No. Barcode
20	Truck data plate, see page 34.

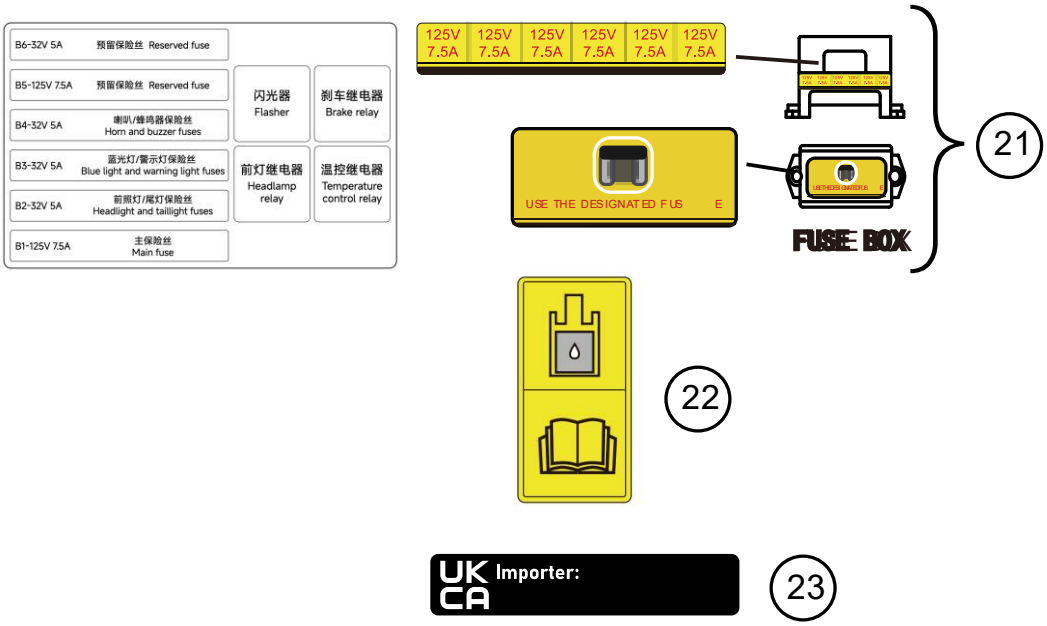

Item	Description
21	Fuse box
22	“Fill Hydraulic fluid port” label
23	“UKCA Importer” label

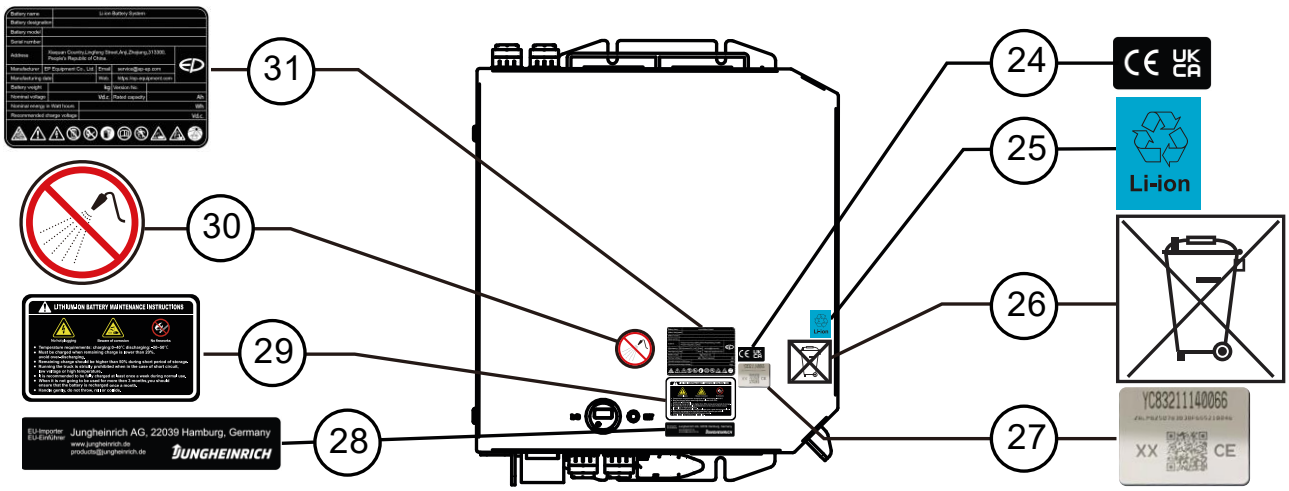

Item	Description
24	CE/UKCA label
25	Disposal – do not dispose of lithium-ion batteries in household waste" notice, see page 138.
26	
27	Remote Connection QR Code
28	JH battery label: • JH battery label is only present in countries of the European Union
29	Lithium-ion battery maintenance instructions, see page 128.
30	Do not spray with water
31	Battery data plate, see page 132.

2.1.8 Description - Warning sign “Correct behaviour”

▶ **Asia-Pacific (APAC) version / European (EU) version**

Description	
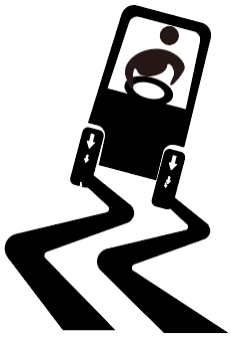	The stability of your truck is ensured if used properly and as intended. But once it tips over during unapproved applications or incorrect operation, always follow the instructions below:
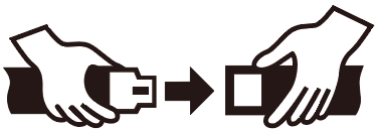	Stay buckled up.
	Don’t jump.
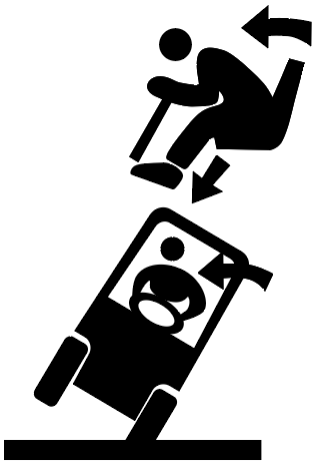	Hold on tight. Brace feet. Lean away.

► **Australia and New Zealand (AU & NZ) version**

Description	
	The stability of your truck is ensured if used properly and as intended. But once it tips over during unapproved applications or incorrect operation, always follow the instructions below: No passenger;
	Don’t jump.
	Brace feet.
	Hold on tight.
	Lean away.

2.1.9 Truck data plate

For queries regarding the truck or ordering spare parts please quote the truck serial number.

Item	Description
1	PRODUCT NAME
2	SERIAL NO.
3	MANUFACTURE DATE
4	RATED DRIVE POWER
5	UNLADEN MASS
6	MIN/MAX BATTERY WEIGHT
7	BATTERY VOLTAGE

2.1.10 Load capacity plate

NOTE

The load capacity plates are designated for the following regions:

- *Plate (1):* Asia-Pacific (APAC) version / European version
- *Plate (2): Australia and New Zealand (AU & NZ) version*

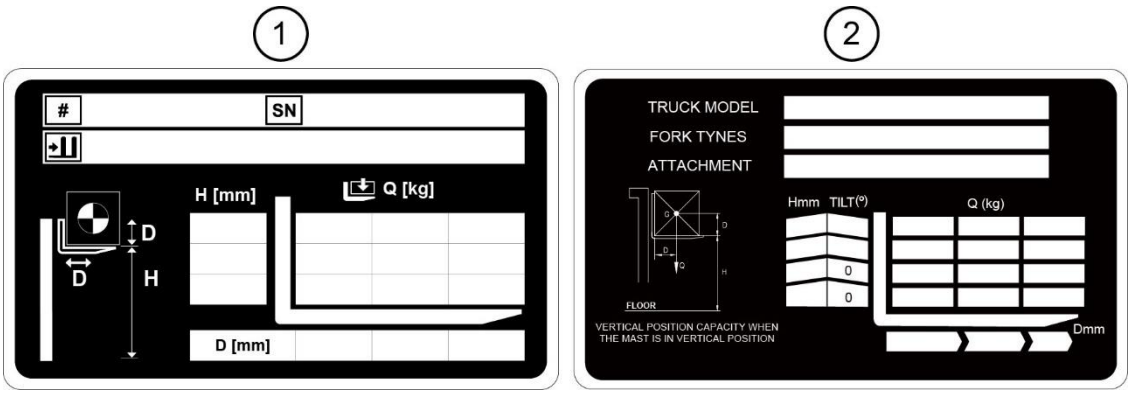

The load capacity plate specifies the rated lifting capacity Q (in kg) of the truck when using a vertical mast with the factory-installed forks.
The maximum permissible load is shown in a table format, based on:

- The load centre of gravity D (in mm)
- The lift height H (in mm)

The capacity plate only reflects the configuration of the truck as originally delivered, including standard forks.

2.2 Controls, body and others

▶ Steering wheel

- When the steering wheel is turned to the right (position B), the truck turns right.
- When the steering wheel is turned to the left (position A), the truck turns left.
- The rear end of the forklift swings out when turning.

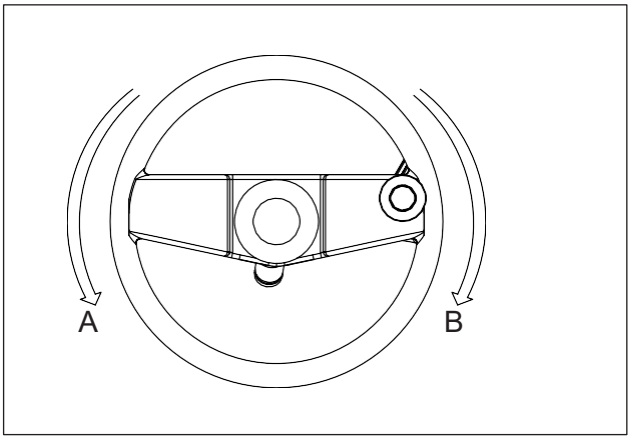

⚠ WARNING

- *The truck is equipped with a hydraulic steering system that automatically deactivates after the truck remains stationary for a few seconds.*
- *Steering functionality is temporarily impaired when the hydraulic pump motor stops*
- *The hydraulic pump motor restarts automatically when the accelerator pedal is pressed.*
- *The hydraulic pressure for steering then reengages.*

▶ Key switch

The key switch has two positions: ON and OFF.

- The truck's power supply is cut off when the key is turned to the OFF position.
- The power supply is activated when the key is turned to the ON position.

To start the truck:

- Set the direction lever to the neutral position.
- Remove your foot from the accelerator pedal
- Turn the key to the ON position

Remove the key after operation to prevent unauthorized use of the truck

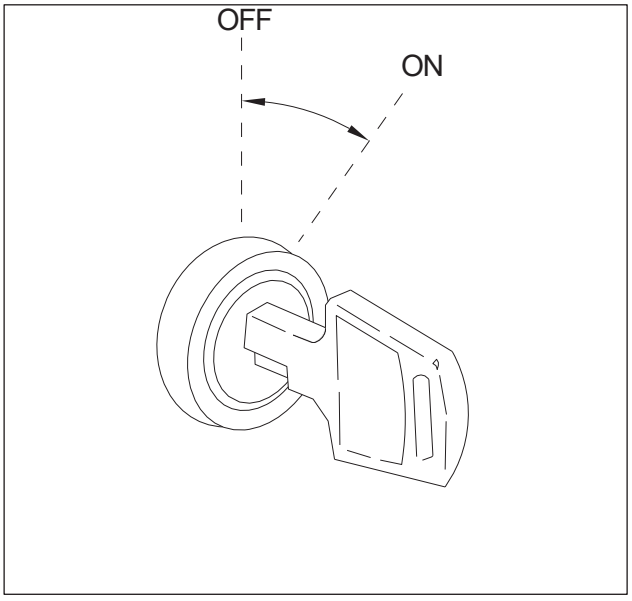

⚠ WARNING

If the direction lever is not in the neutral position or the accelerator pedal is pressed, the truck will not start when the key switch is turned to ON. In this case, a fault code will appear – this is normal behavior. Return the direction lever to the neutral position and take your foot off the accelerator pedal before attempting to start the truck. The fault code will disappear automatically.

▶ Horn button

Pressing the horn button (1) activates the horn.

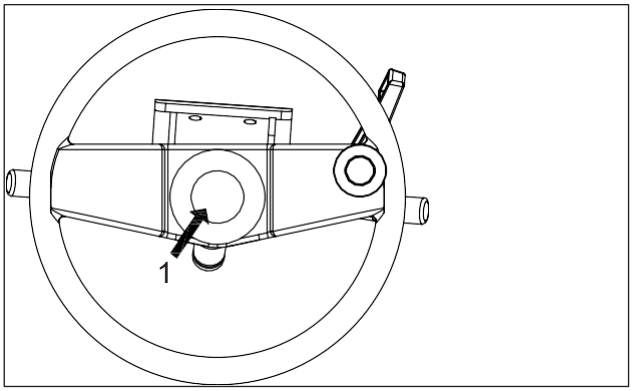

▶ Combination light switch

The combination light switch includes both the turn signal and light functions.

Turn signal: Push or pull this switch, the corresponding signal light flashes.

Push Forward	⬅	Left turn light flashes
Neutral		Off
Pull back	➡	Right turn light flashes

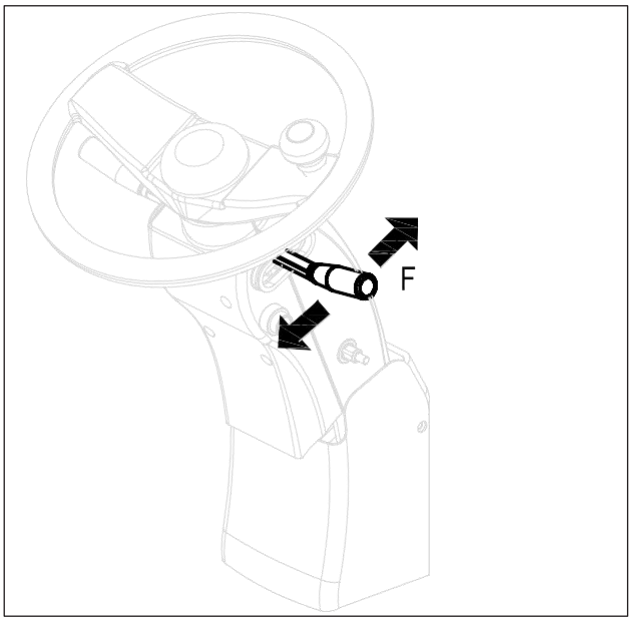

⚠ CAUTION

The turn signal lever does not automatically return to the neutral position.
It must be manually reset after use.

▶ Parking brake pedal (or hand brake lever)

To park the truck securely, fully depress the parking brake pedal (3) when stopping.

To release the brake when starting the truck, depress the pedal again. The pedal will automatically return to its upper position.

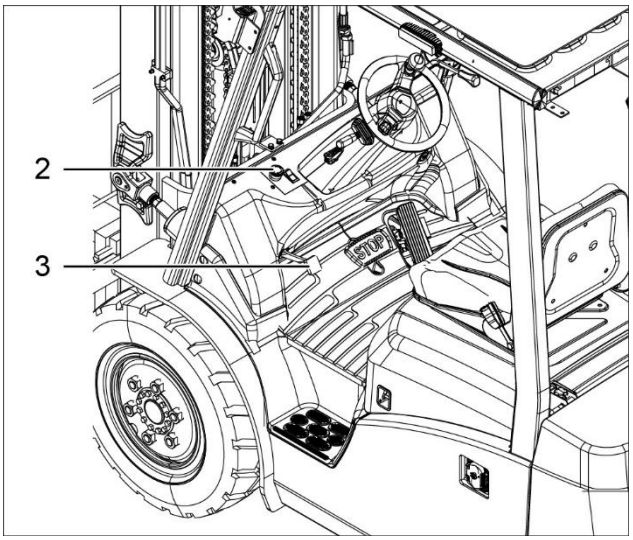

⚠ CAUTION

For trucks equipped with a parking-brake pedal

Fully depress the parking-brake pedal to the floor in one continuous, firm action.

If the pedal was not fully depressed and does not return to its normal released position, depress it again firmly until the parking brake is fully released.

- *Do not drive until you have verified that the parking brake is released.*

⚠ CAUTION

An audible alarm will sound if the operator leaves the seat without activating the parking brake.

▶ Emergency stop switch

In an emergency, press the red mushroom-shaped button (2) to disconnect the vehicle's main power supply. Once activated, the truck can no longer drive, steer or lift.

⚠ CAUTION

Do not use the emergency stop switch to shut down the truck during normal operation.
Use the key switch for standard shutdown procedures.
If the emergency stop is activated while driving, the truck may continue to roll and power steering will be disabled.

▶ Steering column adjuster

The tilt angle of the steering column (1) is adjustable within a range of 12.5°.

To unlock the steering column, turn the right adjustment lever counterclockwise.

To lock it again, turn the lever clockwise.

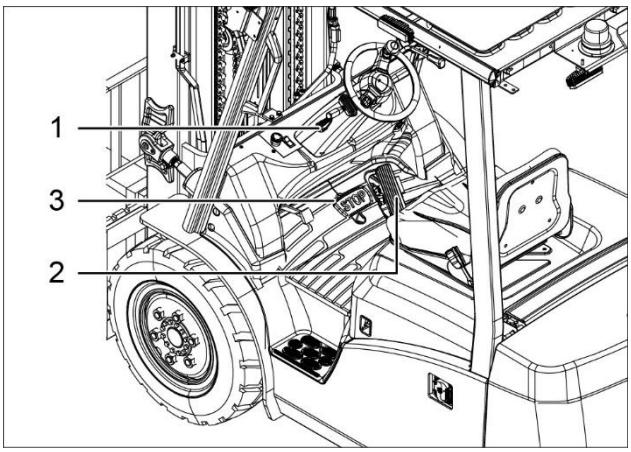

▶ Brake pedal

Pressing the brake pedal (3) slows down or stops the truck.

⚠ CAUTION

Do not press the accelerator and brake pedals simultaneously – this may damage the drive motor.

▶ Accelerator pedal

Gradually press the accelerator pedal (2) to activate the drive motor. The truck will begin moving. The more the pedal is depressed, the faster the truck travels.

▶ Light switch

The rotary knob on the multifunction switch controls the lighting.

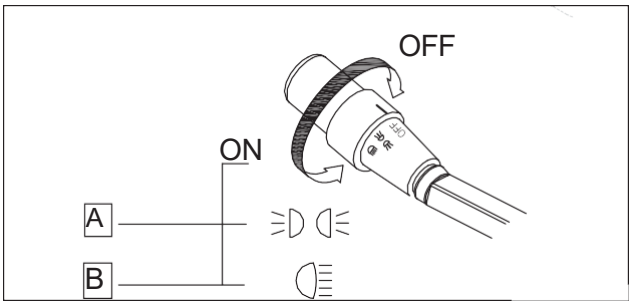

ⓘ NOTE

A: Position light

B: Headlight

▶ Headlights

The headlights (4) are located on the front pillars of the overhead guard. Keep the lights clean and protect them from impact or damage. Replace any damaged lights immediately.

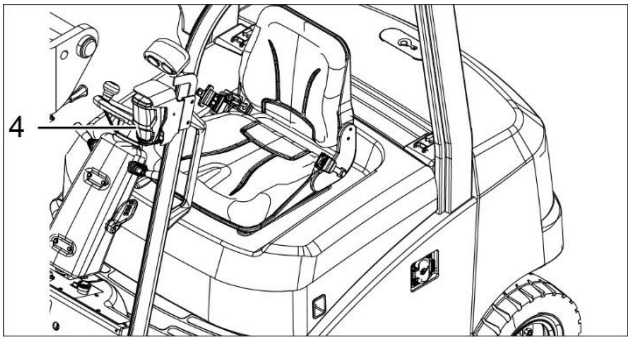

▶ Rear combination lights

The rear combination lights (5) include:

- Turn signal lights (6)
- Brake lights (7)
- Reversing lights (8)

Keep the light units clean and protect them from damage. Replace any defective lights immediately.

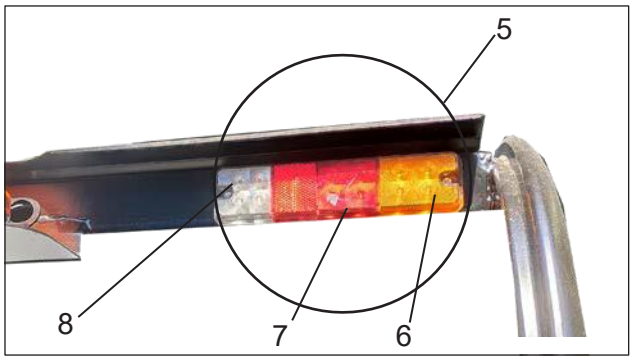

▶ **Blue light (optional equipment)**

When the key switch is turned on, the front blue light (5) switches on automatically.

If the truck is reversing, the rear blue light (6) activates to provide a visual warning.

This alerts nearby persons to the truck's movement or presence.

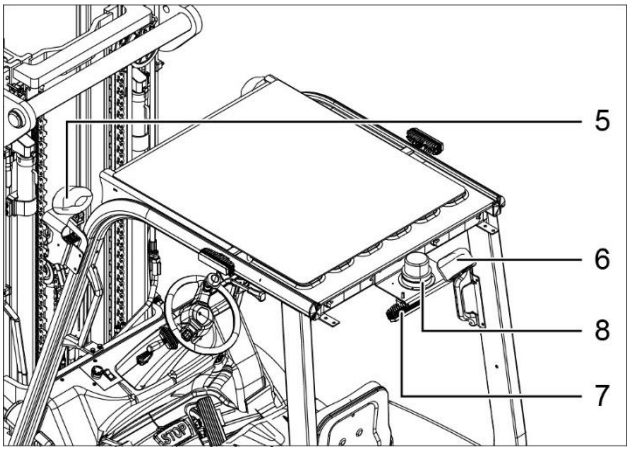

▶ **Red light (optional equipment)**

When the key switch is turned on, the red light (7) switches on automatically.
It provides a visual warning to indicate the truck's position or movement.

▶ **Warning light**

The warning light (8) flashes automatically when the key switch is turned on.

▶ **Fork pin**

Raise the fork stop pin and rotate it 90° to reposition the forks as required for the load.

Then release the pin to lock the forks in position.

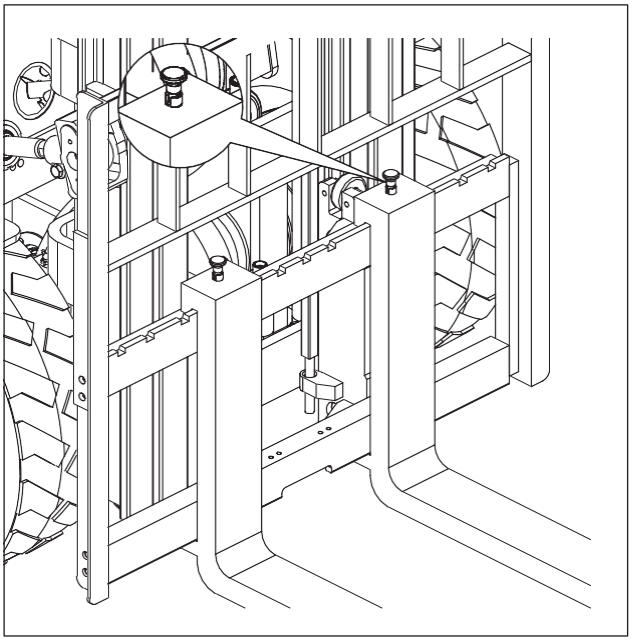

⚠ WARNING

- Adjust fork spacing symmetrically relative to the truck's centerline.
- Ensure the fork stop pins are securely locked after adjustment.
- The lower crossbar of the fork carriage provides an opening for fork removal.
- Do not lock forks in this opening, as this may cause them to fall during operation.

▶ Gas spring

To open the battery cover, raise it and let the gas spring (5) support the cover in the open position.

To close the cover, press the release button on the gas spring (in direction of the arrow) while gently lowering the cover and locking it with the latch.

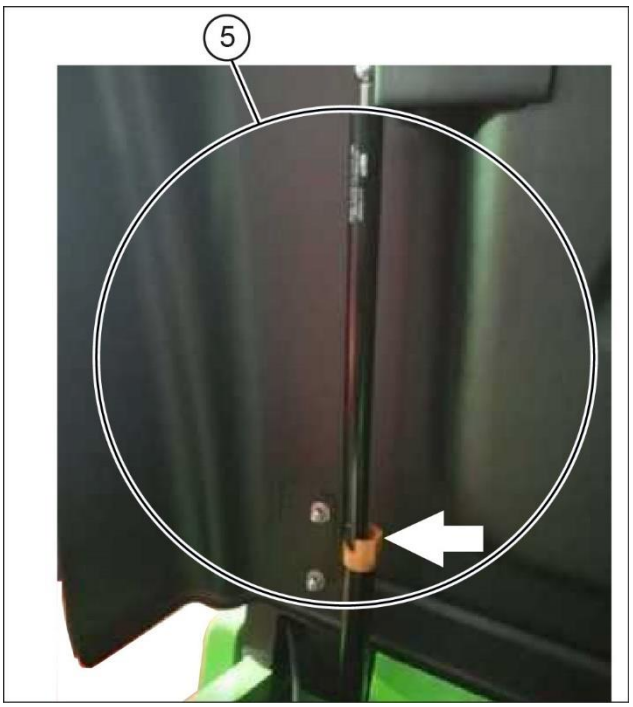

▶ Battery hood

- Pull the lever (2), then open the battery hood (1) carefully.
- Before performing service work under the hood, always turn off the key switch to prevent electric shock.

  Exception: If no part of the body (hands, feet, head, etc.) touches any components, the hood and key switch may remain open/active to allow acoustic diagnosis of a malfunction

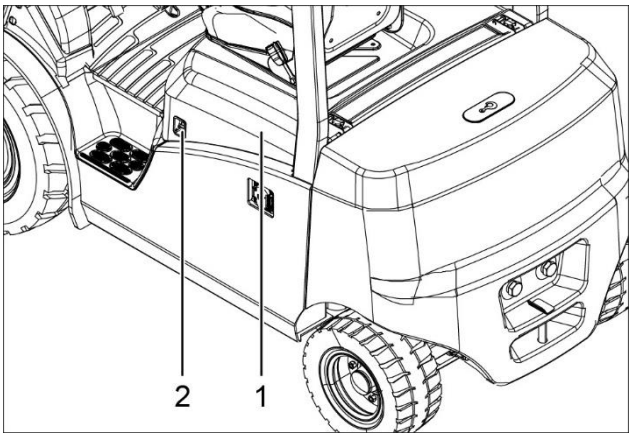

▶ Overhead guard

The overhead guard (3) protects the operator from falling objects. It must provide sufficient impact resistance. Do not operate the truck without the overhead guard installed.

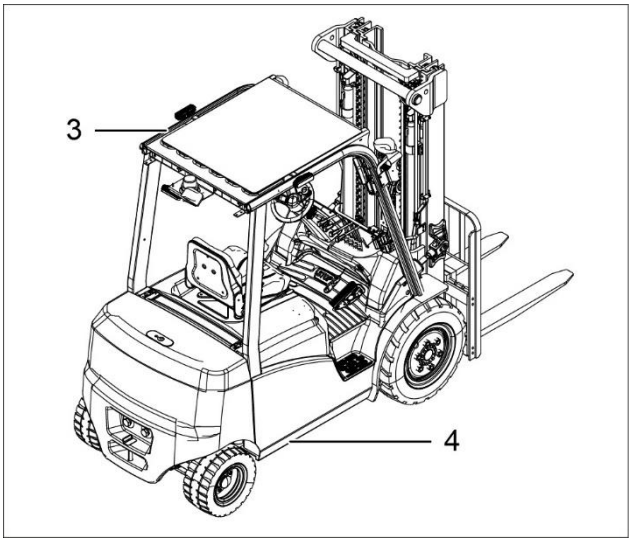

▶ Chassis

The chassis (4), together with the counterweight, forms the main structural base of the truck.

It supports the vehicle’s core assemblies and components.

▶ Rearview mirror

Adjust the rearview mirror (2) to ensure proper visibility and a correct viewing angle.

For a clear view, clean the mirror prior to operation.

Driving with the reversing mirror requires practice and experience. Drive carefully and reduce speed.

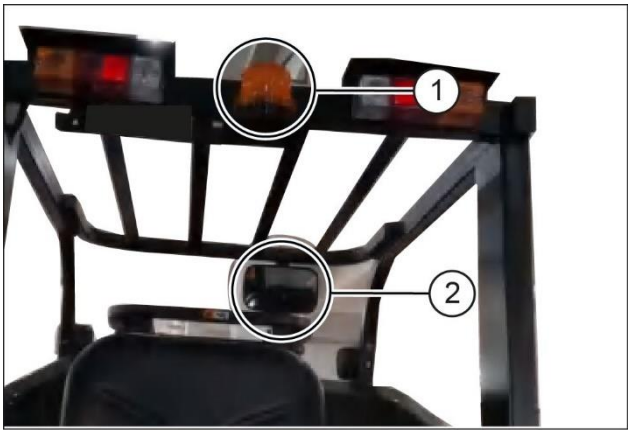

▶ Load backrest

The load backrest is an important safety component designed to prevent loads from falling.

To ensure safety, check that the load backrest extension is securely mounted and in proper condition.

To remove the load backrest, unscrew the bolts (3) on the left and right sides and detach the backrest.

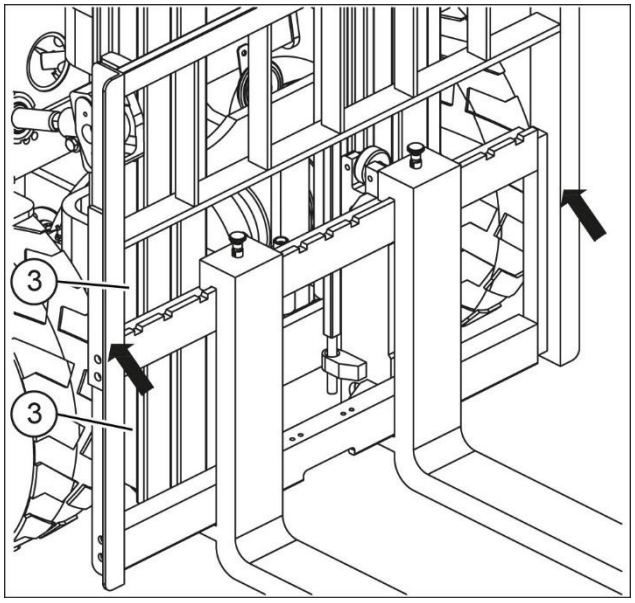

⚠ DANGER

Loads should be arranged so that they do not project beyond the edge of the truck loading surface and cannot slip, topple over or fall off.

▶ Horn switch handle

When reversing, press the horn button (4) located on the armrest to warn anyone behind the truck.

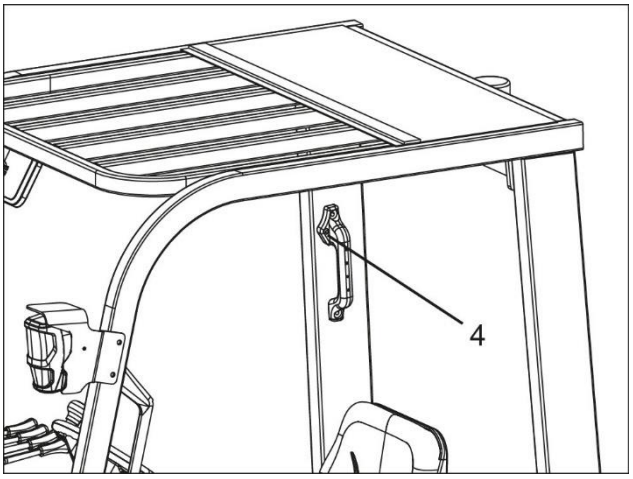

▶ Operating attachments

Attachments are optional equipment installed by the user (e.g. lateral forks, clamps).
Observe the specified working pressure and operating instructions for each attachment.
Install an additional operating lever for attachment use if required.

NOTE

After installation, attach a label to the battery hood indicating the updated load capacity.
Also attach an operating instruction label to the rear side of the attachment control lever.

⚠ CAUTION

Attachments not originally supplied with the truck must be approved by your dealer.
Safe operation must be ensured, particularly with regard to load capacity and stability after installation.

▶ OPS System (Operator Presence Sensing)

The OPS system ensures that the driver is seated correctly.
If the seat is not occupied properly, the drive function is disabled and lifting/lowering is blocked.
This prevents unintended operation and reduces the risk of accidents if the driver leaves the seat.

2.2.1 Adjust and replace forks

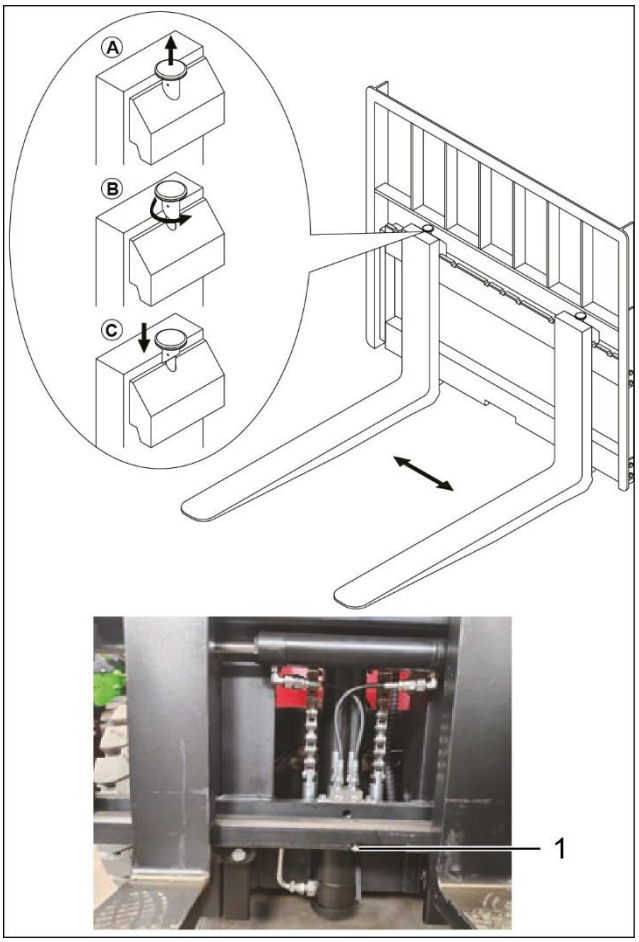

▶ **Adjust fork distance**

To ensure safe load handling, adjust the fork spacing to match the dimensions of the pallet or load before operation.
Procedure:

- Pull the fork locating pin upward (A) and turn it 180° (B) to unlock.
- Adjust the forks symmetrically based on the fork carriage center line.
- After adjustment, turn the locating pin back into position until it locks into place (C).

⚠ CAUTION

Ensure the locating pin is fully locked into the fork carriage slot.
Loose forks may shift while driving, causing the load to slip or fall.
Be cautious when adjusting fork spacing.

▶ **Fork removal**

To remove the forks, unscrew the fixed bolt (1) in the center of the fork carriage.

Move the fork into the center opening of the fork carriage beam.

Tilt the forks forward and lower them until they are free of the fork carriage. Then back up the truck.

▶ **Fork assembly**

Place the forks on the ground in front of the truck. Lower the fork carriage to the lowest position and slowly drive forward. Align the upper and lower slots of the forks with the corresponding beams of the fork carriage. Raise the fork carriage completely and ensure both forks are seated properly. Secure the forks by reinstalling the fixed bolt from above.

2.2.2 Seat

▶ **Adjust seat position**

Pull the seat adjustment lever (2) and slide the seat to the desired position.

Release the lever to lock the seat in place.

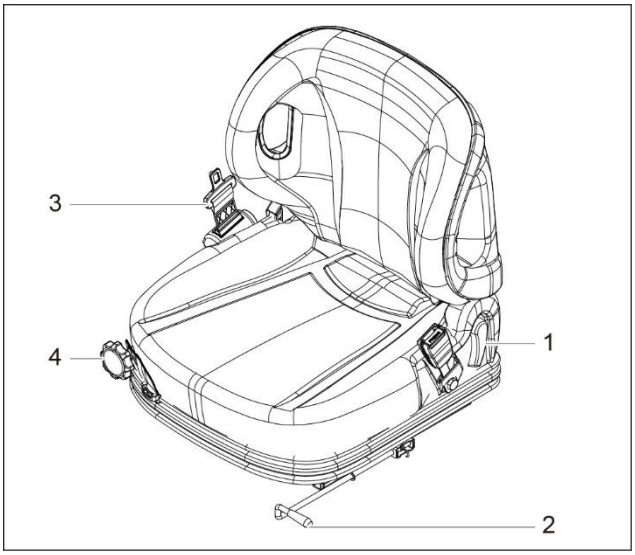

⚠ WARNING

Always lock the seat in position before driving. Never adjust the seat while the truck is in motion.

▶ **Adjust the driver's seat according to weight:**

- Sit down in the seat.
- If the weight setting is correct, the seat suspension will function effectively. If not, re-adjust the weight setting.
- Use the weight adjustment lever (4) to set the driver's weight:
  - Turn in "–" direction to reduce the weight setting.
  - Turn in "+" direction to increase the weight setting.
- Once properly adjusted, the seat can be used safely.

▶ **Adjust seat back**

Rotate the seat back adjustment knob (1) clockwise to adjust inclination.

Release the knob to lock the seat back in place.

▶ **Safety belt**

Fasten the safety belt (3) before starting the truck. It protects the driver in case of an accident. Clean the belt regularly and check for damage.

ⓘ NOTE

Only for the region Australia and New Zealand (AU & NZ).
The travel and hydraulic movements of the truck are only enabled if the following activation sequence is observed:

1. *Sit on the driver's seat.*
2. *Switched on the truck.*
3. *Wear seat belt.*

If the driver's seat is exited or the seat belt lock is opened during operation, the truck is braked to a halt. Travel and hydraulic operations are disabled. The travel and hydraulic movements are only enabled when the operator returns (driver's seat is occupied) and the seat belt has been fastened again.

▶ **Correctly use safety belt**

Sit properly on the seat.

Check that the belt is not twisted.

Fasten the belt and ensure the buckle is locked securely.

▶ **Periodically check the safety belt**

Check if safety belt is damaged or cracked.

Check if the metal pieces of safety belt(including anchor point) are worn or damaged.

Check if lock catch for safety belt or traction machine functions normally.

⚠WARNING

In any case, if there is damage or flaw etc. on the safety belt, please repair or replace it immediately.

Never do any changes to the safety belt. Replace a new one after each accident.

⚠DANGER

The seat belt should be fastened when using the forklift truck! The seat belt can only be used by one person. For the driver's safety, the vehicle doors must be shut tightly when the truck is in operation.

2.2.3 Travel direction lever

▶ **Mechanical Controls**

For switching travel direction of truck: Forward (F), Reverse (R) and Neutral (N).

The travel combination switch is used to switch between forward and reverse directions of travel. When the combination switch is pushed forward and the accelerator pedal is depressed, the forklift truck will travel forward. When the travel combination switch is pulled back, the forklift will travel in reverse.

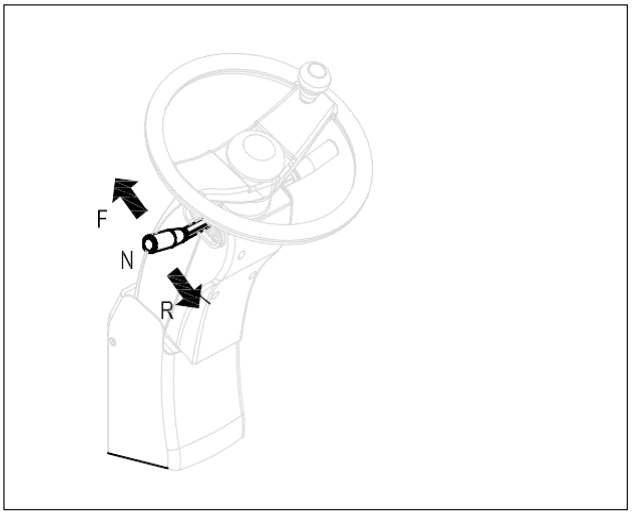

2.2.4 Mechanical lever controls

▶ **Control lever**

The truck may be equipped with the following mechanical control levers:

- Lift lever (1)
- Tilt lever (2)
- Sideshifter lever (3) (if installed)
- Attachment lever (4) (if installed)

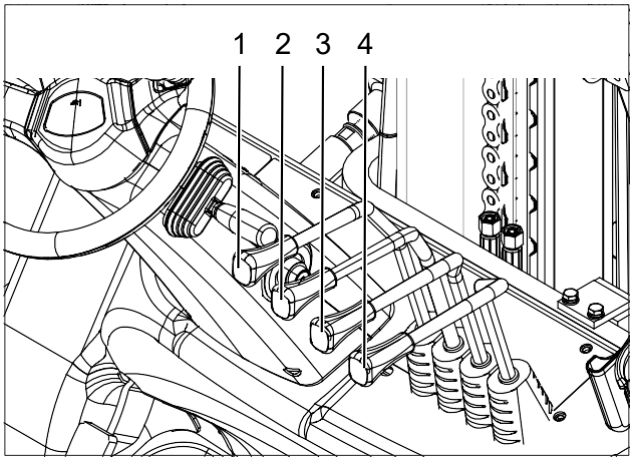

▶ **Lift lever**

- Pull the lever backward to raise the forks.
- Push the lever forward to lower the forks.
- The lifting and lowering speeds depend on the extent of lever movement.

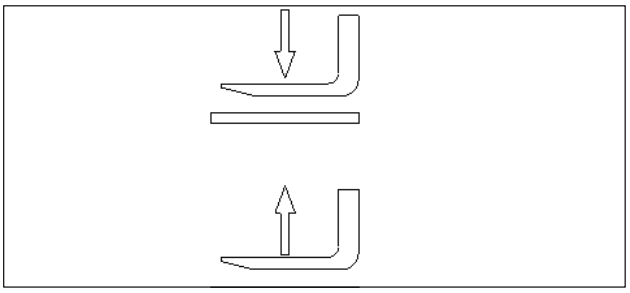

▶ **Tilt lever**

- Push the lever forward to tilt the mast forward.
- Pull the lever backward to tilt the mast backward.
- The tilting speed increases with greater lever travel.

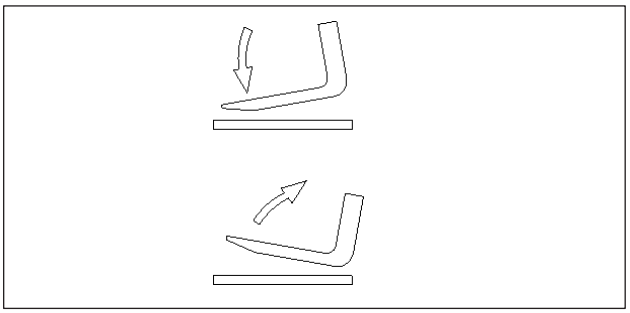

▶ **Sideshifter lever (if required)**

- Use this lever to move the fork carriage to the left or right.
- Push or pull the lever to shift accordingly.

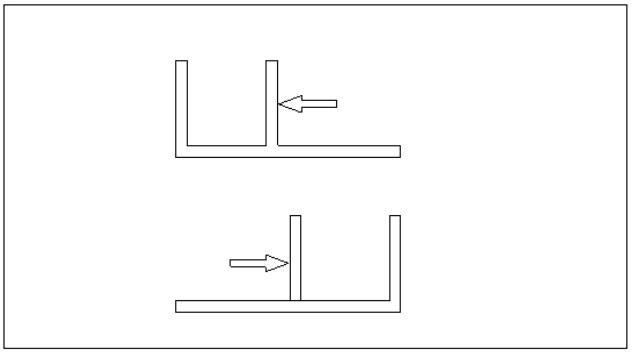

▶ **Attachment lever (if required)**

- Use this lever when operating an attachment connected to the 4th hydraulic valve.
- Push or pull the lever to activate the attachment function (e.g. clamps, rotators).

2.3 Related safety instruction and standard (for CE)

The design and manufacture of the electrical components comply with the Machinery Directive 2006/42/EU.

▶ **Electrical requirements**

The manufacturer confirms that the electrical equipment complies with the requirements of EN 1175 Industrial Truck Safety – Electrical Requirements, provided that the truck is used for its intended purpose.

▶ **Noise emission level**

- CBH 2.0: < 74 dB(A)
- CBH 2.5: < 74 dB(A)
- CBH 3.0: < 74 dB(A)
- CBH 3.5: < 74 dB(A)

Noise levels are in accordance with EN 12053:2001 and 2000/14/EC.
The sound pressure level at the operator's position is below 75 dB(A). The measurement uncertainty is 1.5 dB(A).

▶ **Vibration and acceleration**

Vibration values are determined in accordance with ISO 5349-2:2001, EN 13059:2002, and ISO 2631-1:1997.

The measurement results meet the requirements of 2002/44/EC.

Whole-body vibration is below 1.1 m/s².

▶ **EMC-Electromagnetic compatibility**

The truck fulfills the requirements for electromagnetic compatibility (EMC) in accordance with applicable standards and regulations, including EN 12895.

Electromagnetic compatibility includes the following aspects:

- Limiting the emission of electromagnetic interference (EMI) to a level that does not affect the operation of nearby electronic equipment.
- Ensuring sufficient immunity to external electromagnetic interference so that the truck functions reliably under expected environmental conditions.

EMC testing in accordance with EN 12895 verifies both the electromagnetic emissions of the truck and its resistance to external electromagnetic influences, based on the intended operating environment.
Various electrical design measures have been implemented to ensure compliance with EMC requirements.

⚠ CAUTION

- The EMC requirements for the truck must always be observed.
- When replacing electronic components, only use original EMC-compliant parts and ensure proper reinstallation.

3 Safety

3.1 Safety instructions

▶ **Working condition**

- Operate the truck only on a firm, stable and even surface.
- Remove snow, ice or other obstacles from the driving area before operating the truck. Slippery or uneven ground may lead to loss of control and accidents.
- Never operate the truck in potentially explosive atmospheres.

▶ **Operation permissions**

- Only trained and authorized personnel may operate the truck

▶ **Make periodic checks**

- Inspect the truck regularly for oil leakage, deformation, unusual noise, or loosened components.
- Replace safety-relevant components (e.g. hydraulic hoses, tires, etc.) according to the maintenance schedule.
- Wipe oil, grease or water from foot, hand and floor areas
- Do not smoke or use open flames near the battery
- When working at height (e.g. mast, lighting), use suitable fall protection
- Risk of burns: Allow electrical components to cool down before touching them

▶ **Stop using the forklift when it malfunctions**

- Stop the truck immediately, switch off the key and attach a malfunction notice.
- Do not continue operation until the malfunction has been resolved

▶ **Protect yourself**

- Operators must wear appropriate personal protective equipment (e.g. helmet, safety shoes, gloves)

▶ **Prevent explosion**

- Do not allow flames, sparks or hot metal parts near the battery area.
- Avoid short circuits: Keep conductive tools away from battery terminals.

▶ **Know your truck sufficiently**

- This truck is designed for material handling.
- Ensure visibility is not restricted by the mast.
- Reduce speed when turning, especially on wet or uneven surfaces.
- Always follow the information in the operator’s manual and on the truck’s nameplate
- If anything is unclear, consult your supervisor or contact service personnel

▶ **Start safely**

Before switching on the truck, ensure the following:

- Fasten the safety belt.
- Close all doors securely.
- Engage the parking brake.
- Set the travel direction lever to neutral.
- Make sure that no persons are on, under or near the truck.
- Do not operate the accelerator pedal or any lifting or tilting levers before turning on the power.

Start the truck slowly. Avoid abrupt acceleration or excessive speed.

▶ **Stacking safely**

Do not tilt the mast with a raised load.

- When stacking or unstacking loads, use only small forward and backward tilt angles
- Do not tilt forward unless the load is positioned low or close to the stack.
- For stacking at higher levels: keep the mast vertical, raise the forks approx. 15–20 cm above the ground, then lift the load. Never tilt the mast beyond vertical with a raised load.
- When unstacking: insert the forks, raise slightly, tilt back, reverse, then lower the load.

▶ **How to handle bulky, long loads**

- For loads that restrict the operator’s view, drive in reverse or use a guide person.
- Ensure clear communication with guides (e.g. hand signals, whistle, flag).
- When transporting long items (e.g. pipes, timber) or using a spreader attachment, drive with particular caution.
- Keep a safe distance from corners and narrow aisles.
- Pay attention to nearby workers and obstacles.

▶ **Sudden stops, starts or sharp turns**

- Operate the controls smoothly.
- Avoid sudden stops, rapid acceleration or sharp turns.
- Sudden maneuvers can cause loss of control or tip-over.

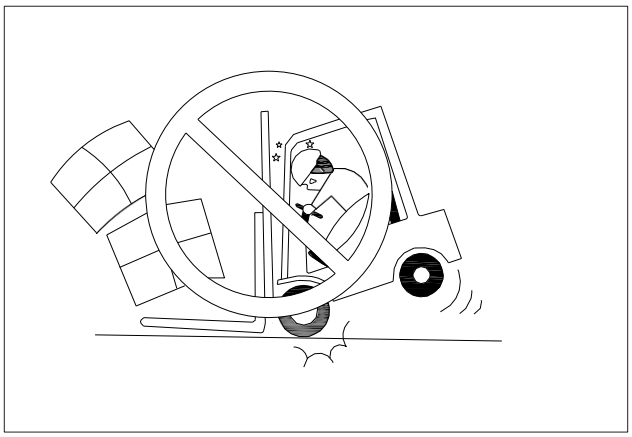

▶ **Focus on the travelling route**

Maintain a clear view in the direction of travel and always observe the route ahead.

Look in the direction the truck is moving to ensure safe operation.

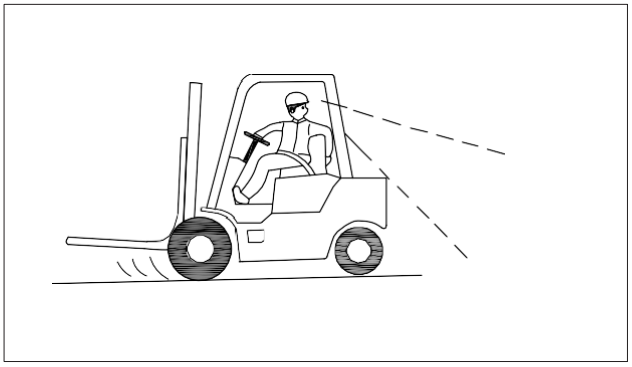

▶ **Do not allow passengers on the truck, forks or pallets**

Never allow other persons to ride on the truck, the forks or on transported loads (e.g. pallets).
People must not be used as counterweights under any circumstances.

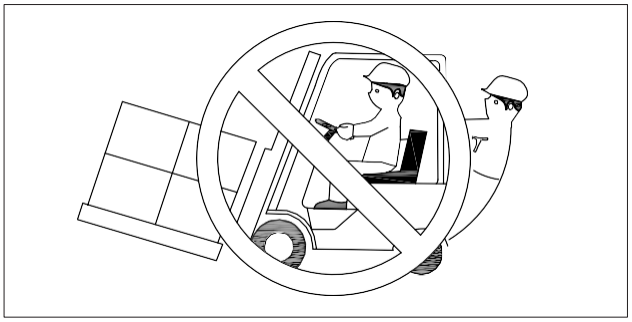

▶ **Carry the loads in a proper manner**

- Use suitable attachments and tools depending on the load's shape and material.
- Do not suspend loads using wire ropes attached to the forks or attachments, as the rope may slip off.

  If slinging is necessary, this must be performed by qualified personnel using appropriate equipment (e.g. hook or crane arm).
- Prevent fork tips from protruding through or beyond the load. Protruding forks may damage adjacent loads or cause them to fall over.
- Avoid contact between the forks and the ground. This helps prevent damage to the fork tips and the floor.

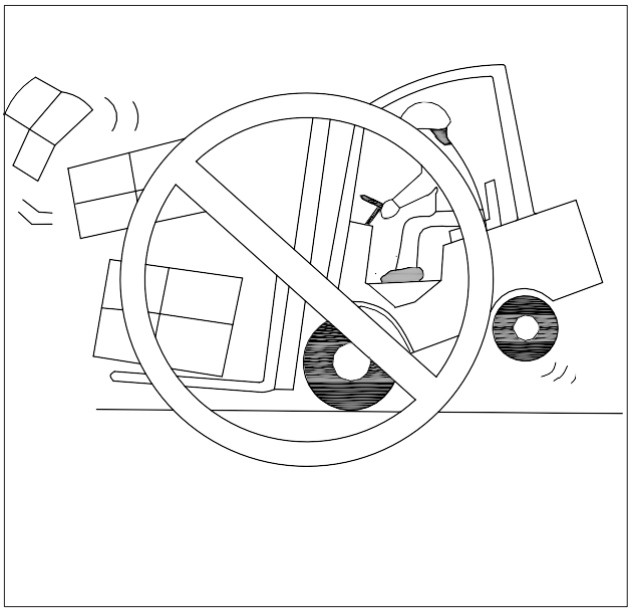

▶ Concentrating on your work

Keep your full attention on your work. Recognize and assess dangerous situations before they occur.

▶ Mount and dismount properly

Never mount or dismount a moving truck.
Use the provided safety steps and handholds.
Always face the truck when getting on or off.
Do not jump!

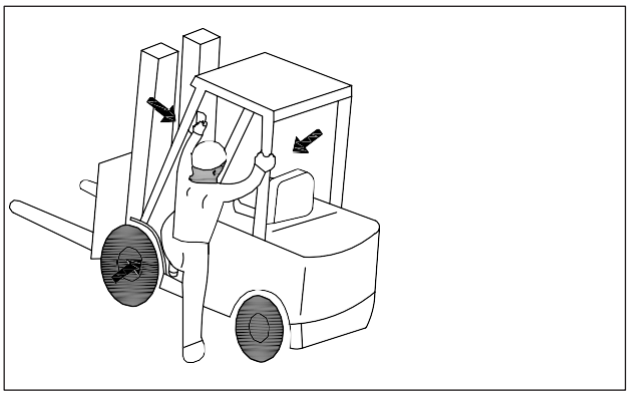

▶ Location of the intended operator positions

Keep head, arms, hands, legs and feet inside the truck's operator compartment at all times.
Never extend body parts outside the vehicle while driving or operating.

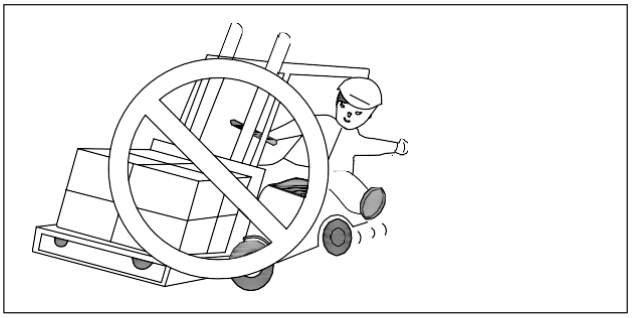

▶ Driving over a dock-board or bridge plate

Before crossing dock-boards or bridge plates:

- Ensure they are properly secured.
- Verify they are rated for the total weight of the truck, including load and operator.

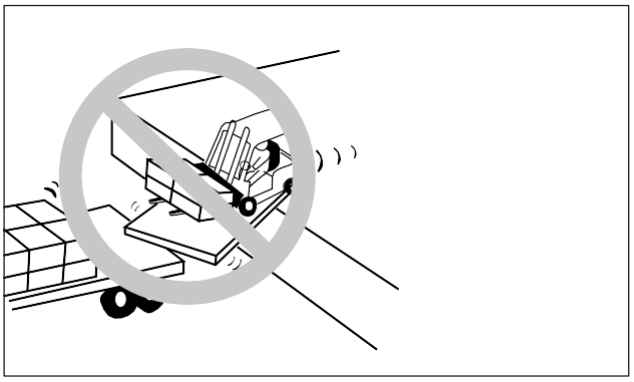

▶ Never climb the masts

- Never stand or walk under raised forks or attachments.
- Never climb onto the forks or the mast.

▶ Overhead guard and load backrest

- The overhead guard protects the operator from falling objects.
- The load backrest stabilizes the load and prevents it from falling backwards.
- Operating the truck without either the overhead guard or load backrest is strictly forbidden.
- Modifying the overhead guard (e.g. welding, drilling holes) reduces its protective function and is not permitted.

▶ Avoid being clamped by the mast

- Do not place hands, arms or head between the mast and the overhead guard.
- Do not place hands between the inner and outer mast sections.

▶ Don’t stack load too high on forks

- Loads must not exceed the height of the load backrest.
- If stacking above the load backrest is unavoidable, secure the load against tipping.
- When large loads restrict forward visibility, operate the truck in reverse or use a guide.

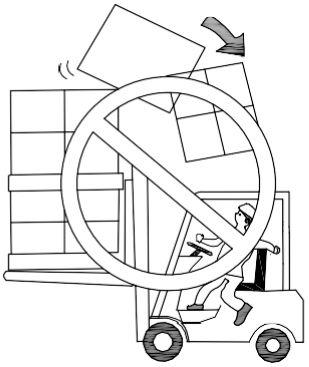

▶ **Tilt backwards when loaded**

Travel with load as low as possible and tilt back. If operating with steel pallet or the like, be sure to tilt back the mast to prevent it from slipping off the forks.

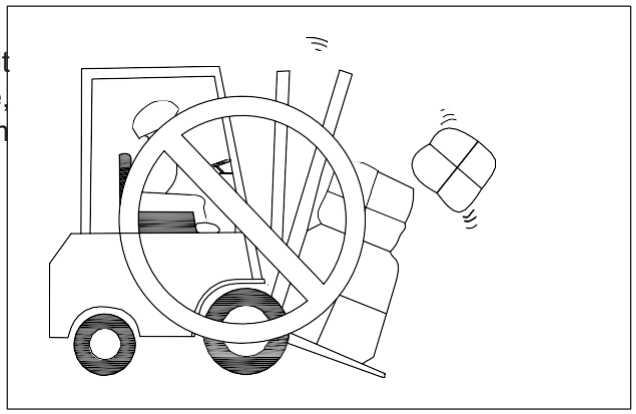

▶ **Watch for doorways and slow down at corners**

Watch for branches, cables, doorways, or overhangs. Be cautious when working in congested areas.

Slow down and sound the horn at the entrances and exits of the aisles and other locations where vision is restricted.

When make a turn, be sure the truck is at an appropriate speed.

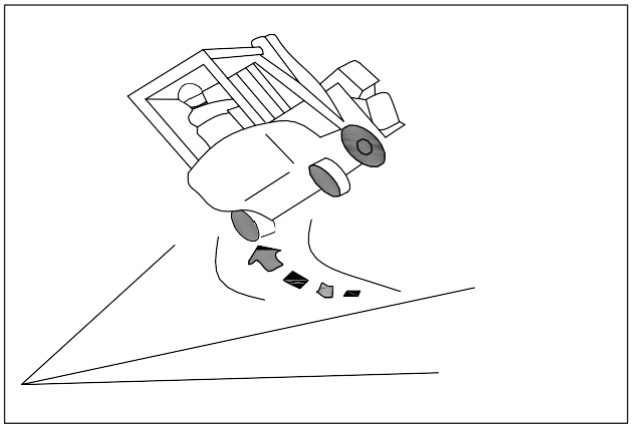

▶ **Do not turn or travel in a horizontal direction when moving up a ramp in case of toppling over.**

When operating loaded truck, have the rear end of your machine pointing downhill.

When operating unloaded truck, have the rear end of your machine pointing uphill.

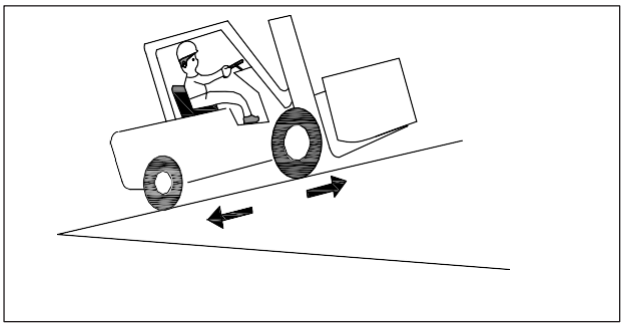

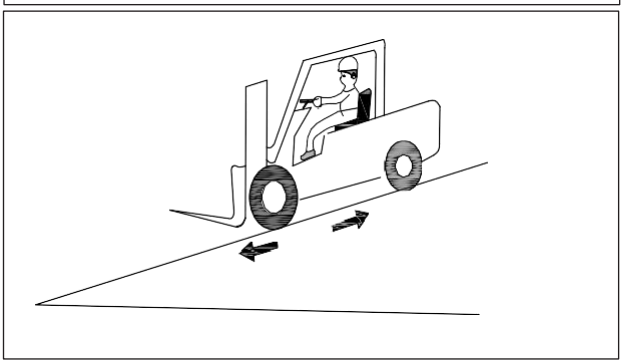

▶ **Avoid lifting loads on a grade**

Never lift loads with the truck inclined. Avoid loading and unloading on a grade.

▶ **In the case of tip-over**

The stability of your truck is ensured if used properly and as intended. But once it tips over during unapproved applications or incorrect operation, always follow the instructions below:

- Stay buckled up.
- Don’t jump.
- Hold on tight.
- Brace feet.
- Lean away.

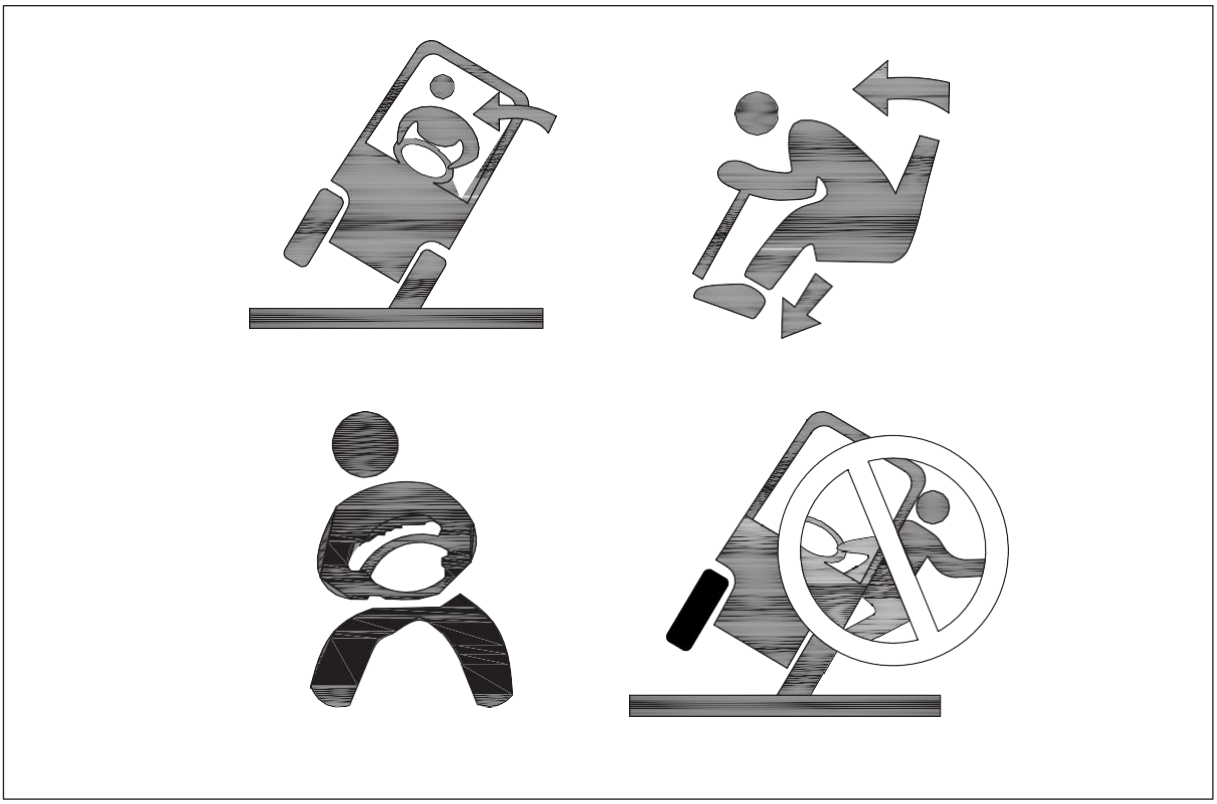

► Travel visibility

The operator must look in the direction of travel and must always have a clear view of the route ahead. If the truck is carrying loads that affect visibility, the truck must travel against the load direction. If this is not possible, a second person must walk alongside the truck as a lookout to observe the travel route while maintaining eye contact with the operator. Proceed only at walking pace and with particular care. Stop the truck as soon as you lose eye contact.

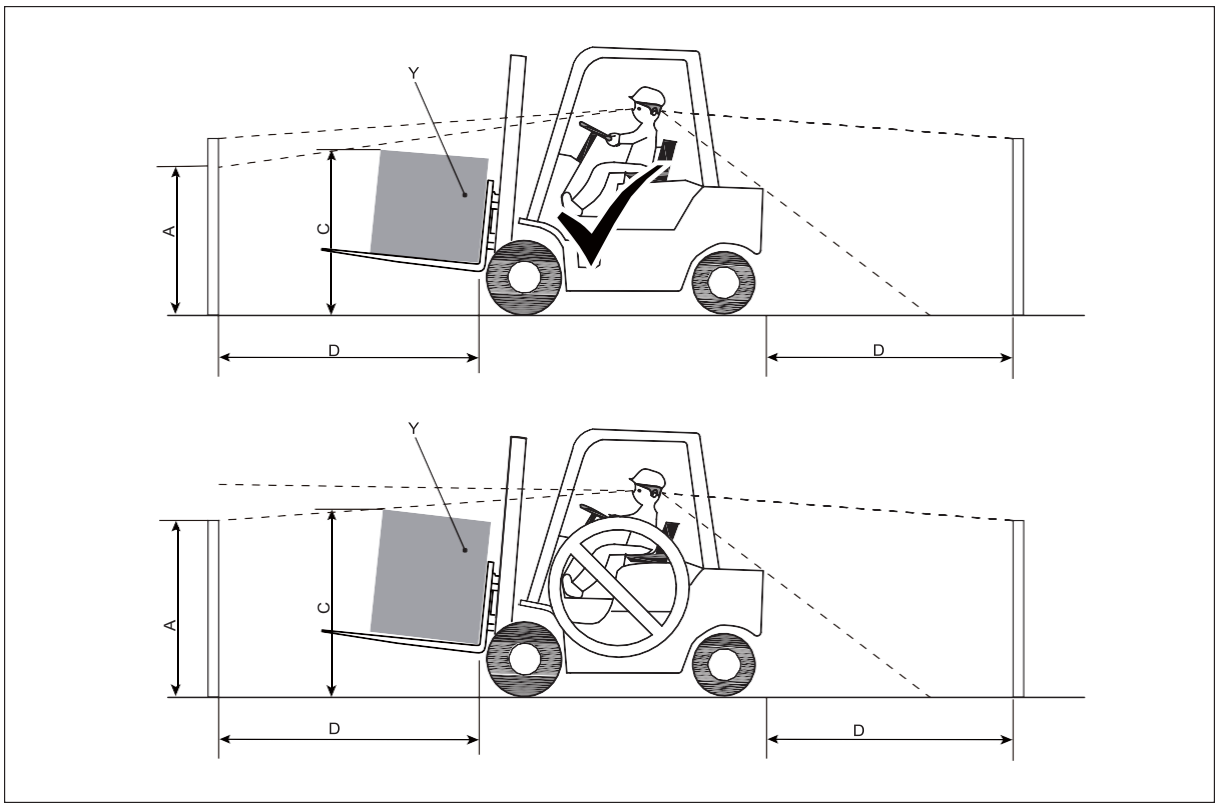

NOTE

At a distance (D) of 4000 mm between the rear of the load (Y) and a person or obstacle, the non-visible area (A) must not be larger than 1085 mm. If the height (C) impairs visibility to the extent that (A) 1085 mm is exceeded, the truck must travel in the opposite direction to the load direction.

Depending on the operating conditions and application of the truck, the operating company or its representative is obligated to define a visible area which is appropriate to the prevailing hazard (s).

▶ **Never operate the truck unless the operator is properly seated**

- Adjust the seat before starting the truck to ensure safe and comfortable access to all controls.

▶ **Load Capacity**

- Know the rated capacity of your truck and never exceed it.
- Do not use people as counterweights. This is strictly forbidden and highly dangerous.

▶ **Use of Attachments**

Only use approved attachments (e.g., sideshifter, bale clamp, crane jib).

- Modifications must be authorized by the manufacturer.
- Retrofitting attachments without approval is not permitted.
- Only qualified personnel may install and connect power-driven attachments.
- The acknowledgement button required for clamping attachments is **not** included in the standard scope of delivery.

▶ **Load Placement**

- Do not carry off-center loads. These may fall when turning or driving on uneven surfaces.
- Avoid protruding or unbalanced loads.

▶ **Maintain Safe Distances Ensure adequate lighting**

- Keep a safe distance from kerbs and road edges.
- Ensure sufficient lighting in the work area;turn on headlights in low visibility

▶ **Protection Devices**

- Never operate the truck if protective devices are removed. Overhead guard and load backrest must remain in place during operation.

▶ **Small Load Handling**

- Carry small items only on pallets – never directly on the forks.

▶ **Appropriate equipment and tools safety**

After the protective device like overhead guard and load guard is dismantled, it is prohibited to operate the truck or carry loads.

▶ **Avoid the following possible instability related to loads**

- Loads are protruding to the side.
- Loads are too wide.
- Loads are too high.
- Loads exceed the capacity.
- The load is liquid, and its center of mass inside the container may shift due to inertial force such as pulling away, braking or turning.
- Loads are not homogeneous.
- Loads are off-center.
- Loads are not arranged properly or fastened tightly.
- Loads are swinging while operating.
- Loads are raised high while traveling.
- Loads are on the downhill side while driving on gradients.
- Loads are higher than the backrest while tilting.

▶ **Never lift a load over anyone**

Never allow anyone to stand or walk beneath raised forks or other attachments.
If unavoidable, support the load using a certified safety stand or block to prevent the attachment from dropping or moving unexpectedly.

▶ **Check the ground of the work area**

- Inspect the operating surface for holes, drop-offs, obstacles, or protrusions.
- Remove any debris that could cause a loss of control or imbalance
- Slow down on wet or slippery surfaces.
- Keep a safe distance from road edges.
- Do not drive over steps.
- Avoid bumpy surfaces to reduce vibration and noise.
- Do not operate the truck in extreme weather conditions such as strong winds, thunderstorms, or snow.

▶ Carry the load low

- Always travel with the forks in a low position (15–30 cm above the ground), regardless of whether the truck is loaded or not.
- Tilt the mast slightly backwards during travel to stabilize the load.
- Do not operate the side shift mechanism (if equipped) while the forks are raised and loaded – this can affect the truck's stability.

▶ Fire extinguishers

- Equip the workplace with suitable fire extinguishers.
- Ensure all operators know the location of the fire extinguisher and how to use it.
- Relevant instructions are provided on the extinguisher label.

▶ Hydraulic system risks

- The hydraulic system remains under pressure. Before starting inspection or maintenance, depressurize the system.
- Always wear protective equipment when working on hydraulic components.
- Only disconnect hydraulic hoses or couplings when the system is fully depressurized.

▶ Braking distance

- Do not operate the truck on inclines greater than 15% without consulting your dealer.
- The specified gradeability in the type sheet applies only to short-term situations such as overcoming curbs or small obstacles.
- Always account for the minimum required braking distance and ensure the road surface is suitable.

▶ Residual risks

Despite proper use and adherence to all safety requirements, certain residual risks remain:

- Leaks or ruptures in hoses or containers may result in escape of hazardous materials.
- Driving on uneven, icy, wet or poorly visible ground can cause accidents.
- Risk of fire or explosion due to battery or electrical components.
- Insufficient maintenance or use of incorrect spare parts.
- Disregarding safety instructions or warning signs.

► Battery safety

⚠ WARNING

Lithium-ion batteries contain flammable electrolytes and can pose a fire or explosion hazard if damaged or improperly handled.

Follow these safety instructions when working with lithium-ion batteries:

- Do not crush, puncture, short-circuit, or disassemble the battery pack.
- Keep the battery away from heat sources, open flames, or direct sunlight
- Remove metal objects such as rings or bracelets before working near the battery or electrical components
- Only qualified personnel may charge, replace, or service the battery
- Use only chargers and components approved by the manufacturer
- Follow all safety and handling instructions provided by the manufacturer.

► Attachments

⚠ WARNING

Risk of injury due to falling loads
Incorrect operation may cause the load to fall unexpectedly.

- *Only use clamping attachments on trucks equipped with a button-activated auxiliary hydraulic function.*
- *Clamping attachments must only be operated on trucks equipped with ZH1, ZH2, or other auxiliary hydraulic systems requiring operator acknowledgement.*
- *Ensure that the hydraulic lines of the attachment are connected to the designated ports.*
- *Do not use clamping attachments for load clamping or during clamping operation when fork extensions are installed.*

WARNING

The acknowledgement button required for clamping attachments is not included in the standard scope of delivery.

3.2 Regulations for the operation of trucks

Operating safely is every operator's obligation and responsibility. The "Safety Instructions" cover basic safety procedures and warnings of general application to the forklift trucks. However, safety precautions given on the following pages are also applicable to lift trucks that have special specifications or attachments.

Read this manual carefully and become completely familiar with your truck to make sure the driver understands all the information, directives and safety guidelines that are applicable to your counterbalance lift truck are complied with.

3.2.1 Driver authorization

The truck may only be used by trained personnel who have demonstrated that they can drive, handle loads, and are authorized to operate the truck.

3.2.2 Unauthorized use of truck

The driver is responsible for the truck during the time it is in use and should prevent unauthorized persons from driving or operating the truck. Do not carry passengers or lift personnel.

3.2.3 Damage and faults

The supervisor must be immediately informed of any damage or faults to the truck. If the truck is not safe for operation (e.g., wheel or brake problems) it must not be used until it has been repaired.

3.2.4 Repairs

The driver must not perform any repairs or alterations to the truck. Repairs must only be done by an authorized, trained technician. The driver must never disable or adjust safety mechanisms or switches.

3.2.5 Hazardous area

A hazardous area is any area in which a person may be at risk due to truck movement, lifting operations, load handling (e.g., forks or attachments), or the load itself.
It also includes areas at risk from falling loads or moving equipment.

- Keep unauthorized persons out of hazardous areas.
- If there is danger to personnel, give a timely and clear warning signal.
- Stop the truck immediately if unauthorized persons remain in the area.

3.2.6 Safety devices and warning signs

Observe all safety devices, warning signs, and warning instructions in this manual without exception.

3.2.7 Travel routes and work areas

- Only use designated lanes and routes intended for truck operation.
- Keep unauthorized personnel away from work areas.
- Store loads only in designated storage areas.

3.2.8 Driving conduct

Adjust driving behavior to workplace conditions:

- Drive slowly in bends, narrow passages, or blind spots.
- Watch for swing doors and ensure sufficient braking distance.
- Always remain in control of the truck.
- Avoid abrupt stops (except in emergencies), rapid U-turns, or passing in blind spots.
- Do not lean out or reach beyond the operator’s compartment.

3.2.9 Nature of loads to be carried

- Only transport loads that are in good condition.
- Ensure loads are positioned securely and evenly.
- Use measures to prevent tipping, shifting, or falling parts.

3.3 The structure and stability of truck

To avoid tipping, the operator must understand the truck's structure and the relationship between load and stability.

3.3.1 The structure of the truck

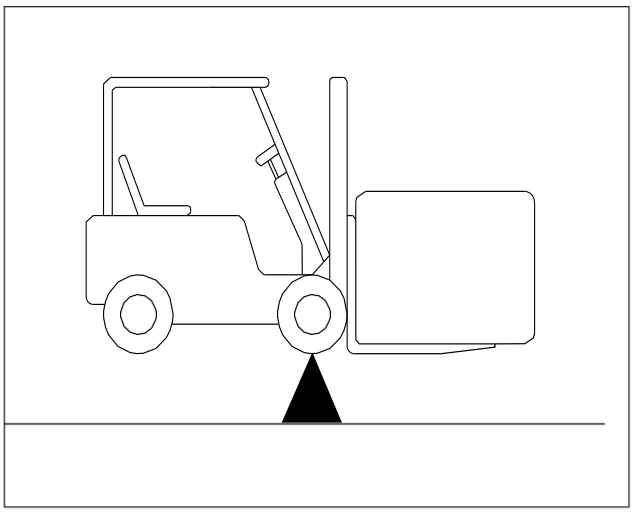

- A forklift consists of a chassis and a mast unit (including the forks).
- The truck maintains stability by using the front axle as a fulcrum. When a load is applied, the weight must be evenly distributed between the truck and the load.
- Always consider the center of gravity of both the load and the truck to maintain proper balance.

3.3.2 Load center

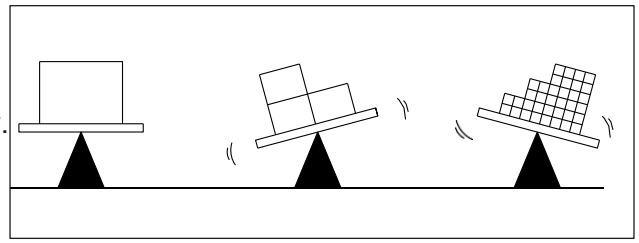

- The shape and distribution of the load influence the load's center of gravity.
- It's important to distinguish between different load types (e.g., boxes, boards, cylinders) to correctly assess their impact on truck stability.

.

3.3.3 Wind loads

- Wind can affect truck stability, especially when handling large-surface or tall loads.
- Light loads must be secured against wind to prevent tipping or falling.
- In strong winds, stop the truck operation to avoid dangerous situations.

3.4 Gravity center and stability

The combined center of gravity (truck + load) determines the truck's stability:

- When unloaded, the center of gravity remains within the truck.
- When loaded, it shifts depending on the load weight and position.
- Tilting or raising the mast also shifts the center of gravity forward and upward.

Key influencing factors:

- Load size, weight, and shape
- Lift height
- Mast tilt angle
- Mast acceleration
- Turning radius
- Road inclination and gradient angle
- Attachments

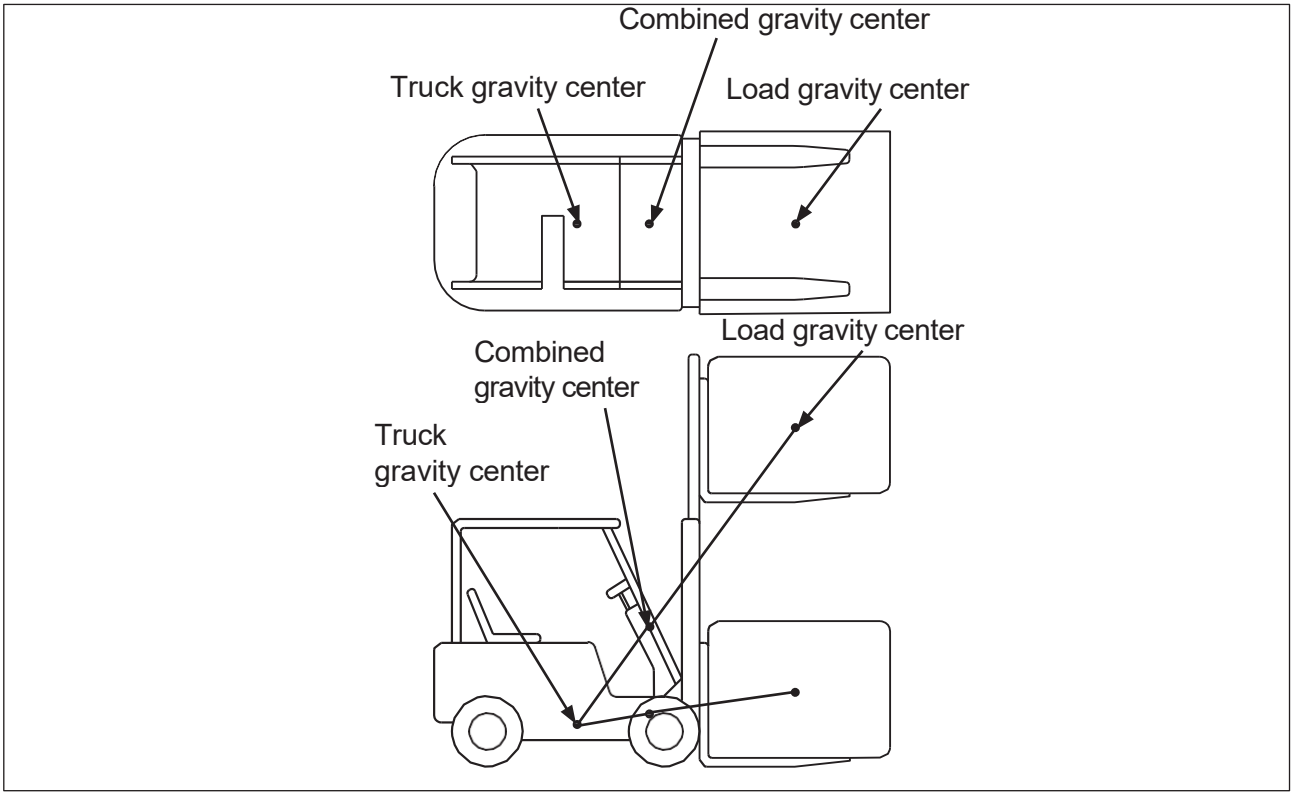

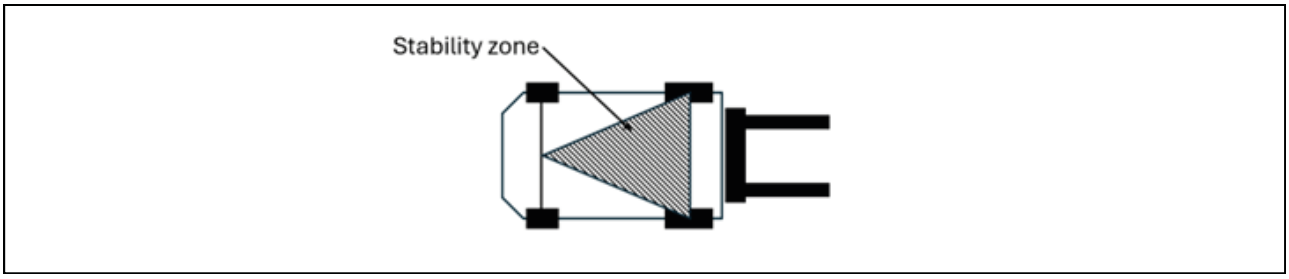

⚠ WARNING

In order to make the truck stable, the combined center must be in the triangle which is made up of two points that the two front wheels attach ground and the midpoint of the back axle. If the combined center is in the front driving axle, the two front wheels become two fulcrums, the truck will overturn. If the combined center departures the triangle, the trucks shall overturn in the corresponding direction.

Operator's Daily Checklist

Date _____ Operator _____

Truck No. _____ No. _____

Department _____

Runtime
Meter Reading _____

Daily Check Items	O.K.(√)	Remark
Check Travel Controls for binding or looseness.		
Check the entire truck as well as the surface beneath it for signs of fluid leakage.		
Check Chains, Cables, and Hoses that they are in place, secured correctly, functioning properly and free of binding or damage.		
Check Decal Condition		
Test service brake and parking brake,emergency stop switch can be disengaged and reengaged.		
Check the drive wheels for cracks or damage. Move truck to check load for freedom of rotation.		
Check battery charge and condition.		
Check operation of lift and lower to their maximum positions. Check side shift operation if applicable.		
Check that all hardware (nuts/bolts) are secure and free of damage.		
Check for binding or looseness in steering arm when steering.		
Check the mast , load backrest and forks for visible damage such as cracks. Ensure the fork pins are latched.		
Check that horn sounds when operated.		

4 OPERATION

4.1 Operator's daily checklist

4.1.1 Preparing the truck for operation

► **Visual Inspection**

- Inspect the truck for visible damage, especially on wheels, forks, mast, load backrest, and carriage.
- Check fork pins, carriage, and side shift mechanism for wear or damage.
- Examine the hydraulic system in visible areas for leaks or damage.
- Inspect the battery attachment, cable connections, and battery connector.
- Check condition of decals and labels.

► **Seat and restraint systems**

- Ensure the driver's seat is securely locked in position.
- Check the condition and function of the seat and seat belt.
- Test the Operator Presence System (OPS): When the seat is vacated, hydraulic functions must be disabled.

► **Tyres and wheels**

- Check tyres and wheels for wear, damage, and proper inflation if applicable.
- Ensure load chains are evenly tensioned.

► **Function and safety tests**

- Test the horn, warning device, and emergency stop switch.
- Check display and battery discharge indicator.
- Test working lights and visibility aids (mirrors, cameras, etc.).
- Check the steering, lift/lower, tilt and, if applicable, attachment functions.
- Check forward and reverse driving functions.
- Test the braking system (parking and service brake).

► **Hydraulic and oil levels**

- Check oil levels in the hydraulic reservoirs.
- Inspect working and steering hydraulics for function and leakage.

⚠ WARNING

Never start the truck before any damage or failure to the truck has been settled.

4.2 Using the truck

4.2.1 Commissioning

Using the truck for the first time

- Prepare the truck for operation
- Verify that all delivery items are complete and correctly assembled.
- Ensure that only lifting devices, masts and basic trucks with matching serial numbers are combined.
- Fully charge the battery using battery current only.

NOTE

Commissioning and driver instruction must only be performance by trained personnel.

If several trucks are supplied, make sure that only load lifting devices, masts and basic trucks with the same serial number are assembled.

4.2.2 Environmental considerations

► **Packaging**

- Some parts of the truck are protected by packaging material during transport
- All packaging must be removed completely before starting operation.
- Dispose of packaging material in accordance with local environmental regulations

NOTE

The packaging material must be disposed of properly after delivery of the truck.

4.2.3 During running-in

We recommend operating the truck under light load conditions during the first 100 hours of operation to ensure long-term performance.

Observe the following points during the running-in period:

- Avoid over-discharging the battery. Recharge when the remaining battery level falls below 20%.
- Perform all preventive maintenance services as specified.
- Avoid sudden stops, starts, or sharp turns.
- Carry only 70–80% of the rated load.
- Perform oil changes and lubrication earlier than specified in the service plan.

4.2.4 Defining directions

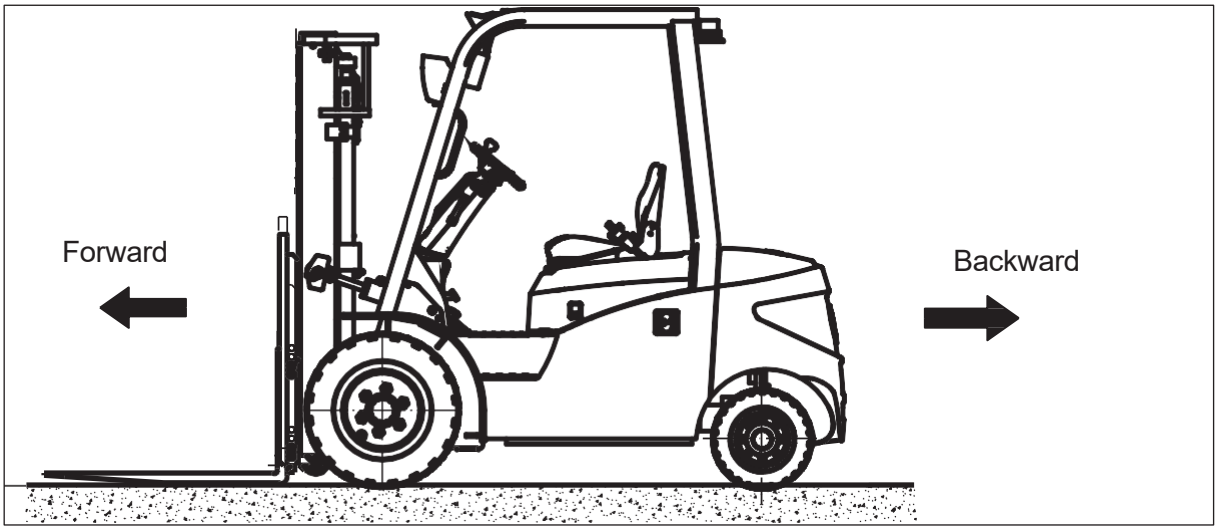

4.2.5 Truck starting

- Slightly rotate and pull up the emergency stop button to release it.
- Set the travel direction lever to the neutral position.
- Insert the key into the key switch and turn it clockwise to power up the truck.
- Press the brake pedal and make sure the parking brake is engaged.
- Check the display for the current battery state of charge.

  The truck is now ready for operation.

⚠ WARNING

Do not open the rear window if the truck is equipped with a cab while driving. Risk of broken glass.

4.2.6 Driving

- Raise the forks 15 to 20 cm (6–8 in) above the ground using the lift lever.
- Tilt the mast fully backward using the tilt lever.
- Push the travel direction lever forward to drive forward or pull it back to drive in reverse.
- Place your left hand on the steering wheel knob and gently press the accelerator with your right foot.

⚠ WARNING

In cases of reduced clearance, operators must have a minimum head clearance of 30 mm (1.2 in) to operate the truck safely.

⚠ WARNING

On trucks with a cab, the doors must be closed before driving.

4.2.7 Driving on ascending and descending gradients

⚠ DANGER

Danger to life!

Driving on ascending and descending gradients carries special dangers!

► **Always follow the instructions below.**

- Reduce speed when driving downhill. Do not exceed 4.8 km/h.
- Always drive with the load facing uphill.
- Only use designated traffic routes that are approved and safe for gradient driving
- Do not operate the truck on gradients greater than 15%, as this exceeds the approved stability and braking limits
- It is not permitted to drive on long ascending and descending gradients greater than 15% due to the specified minimum braking and stability values.
- If driving on gradients above 15% is required, consult the manufacturer for approval and specific operating instructions.
- On slopes and inclines always carry the load facing uphill, never approach at an angle or turn.

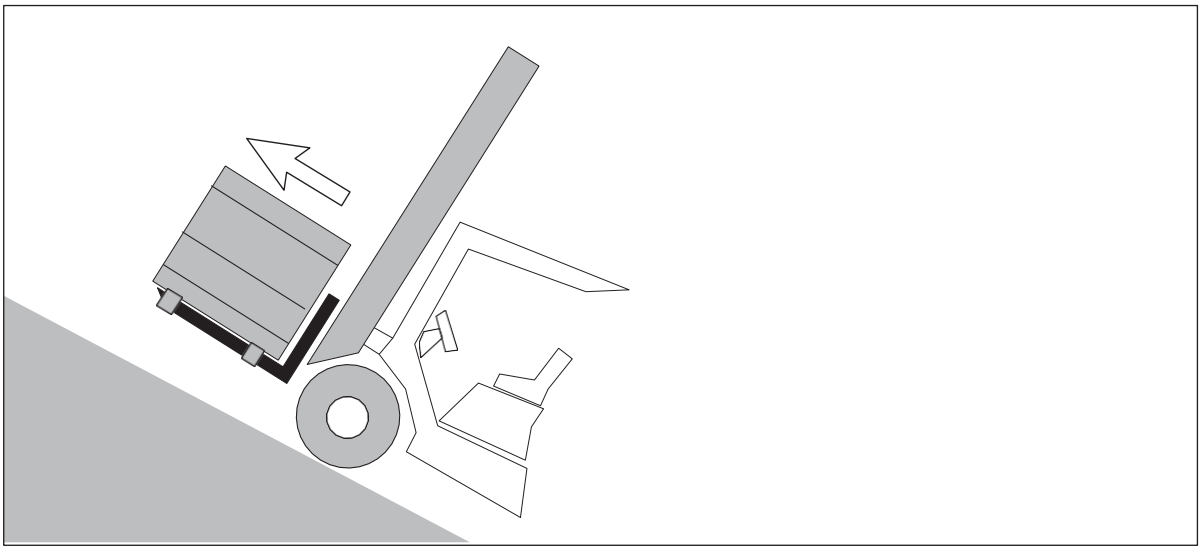

4.2.8 Steering

Unlike standard vehicles, this truck is steered via the rear wheels. When turning, the counterweight at the rear swings outward. Always reduce speed before turning. Turn the steering wheel counterclockwise to steer left. Turn the wheel clockwise to steer right.

4.2.9 Braking

Use the service brake to decelerate or bring the truck to a stop by pressing the brake pedal.

To secure the truck against unintended movement, apply the parking brake.

After stopping, activate the emergency stop switch.

⚠WARNING

- Never adopt parking brake instead of service brake in normal traveling.
- Emergency stop is unavoidable in travel, only when the service brake is out of control can apply the foot(parking) brake pedal to stop the truck.
- Be careful when braking and avoid loads sliding.

4.2.10 Parking

► **To park the truck safely:**

- Reduce speed and press the brake pedal until the truck comes to a complete stop
- Set the travel direction lever to neutral.
- Apply the parking brake.
- Lower the mast fully to the ground and tilt it completely forward.
- Turn the key switch to off, remove the key, and store it securely
- Activate the emergency stop switch to shut off the power.

⚠WARNING

- *An unsecured truck may cause accidents. The truck wheels may need to be secured with wedges.*
- *Never park the truck on the traveling route to influence other truck traveling.*
- *The truck must be parked in a frost-free, clean, dry location and 0-40℃ condition. Parking the forklift in an environment below 0 ° C for a long time is forbidden.*

⚠WARNING

Do not park the forklift for an extended period or leave the seat for a prolonged time on slopes greater than 15%. Temporary parking is allowed, but the driver must remain seated.

4.3 Handling loads

4.3.1 Adjust fork distance

To ensure safe load handling, adjust the fork spacing to match the dimensions of the pallet or load before operation.

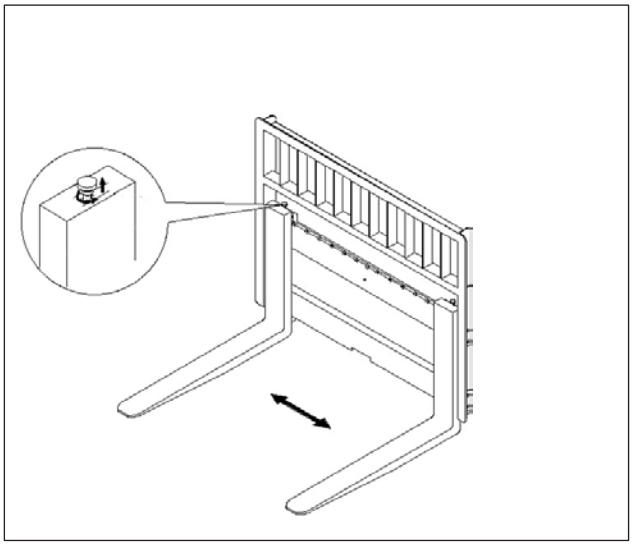

Procedure:

- Pull the fork locating pin upward and turn it 180° to unlock.
- Adjust the forks symmetrically based on the fork carriage center line.
- After adjustment, turn the locating pin back into position until it locks into place.

NOTE

The centre of gravity of the goods should be at the centre of the fork arms.

CAUTION

Loads should be arranged so they do not project past the edge of the trucks loading surface.

Do not handle loads that are taller than the load backrest unless the load is secured to prevent it from falling off or backward onto the truck.

4.3.2 Lifting loads

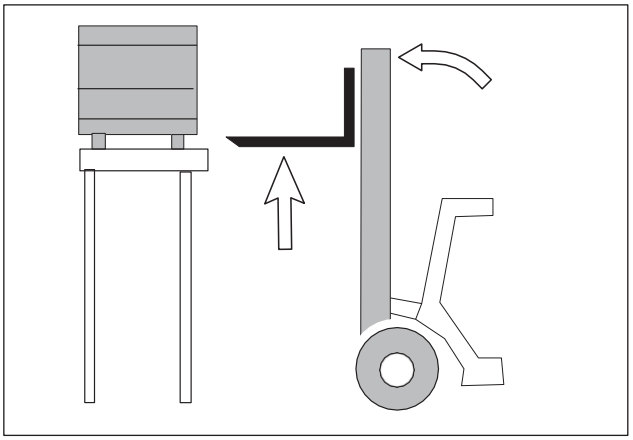

- Approach the load slowly and carefully.
- Apply the service brake to secure the truck.
- Position the mast vertically.
- Raise the forks to the correct height for the load.
- Adjust the fork arms to the maximum possible spacing to fit underneath the load.
- Drive forward and insert the forks completely under the load. Ensure the goods rest against the vertical section of the fork arms and do not contact any adjacent loads.

NOTE

At least two thirds of their length must extend into the load.

Raise the fork carriage until the load rests freely on the forks.

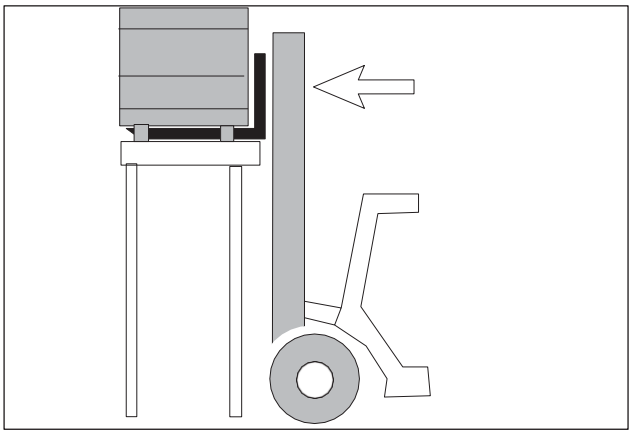

Set the travel combination direction lever (1) to reverse and release the parking brake.

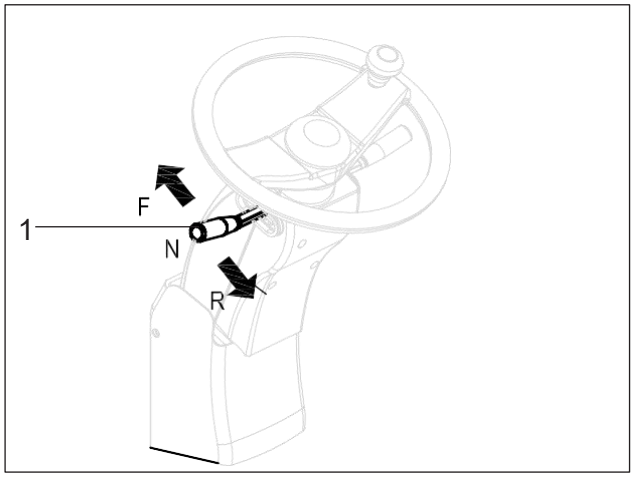

Reverse slowly and carefully until the load has cleared the storage area.

Tilt the mast back and lower the load to the transport height.

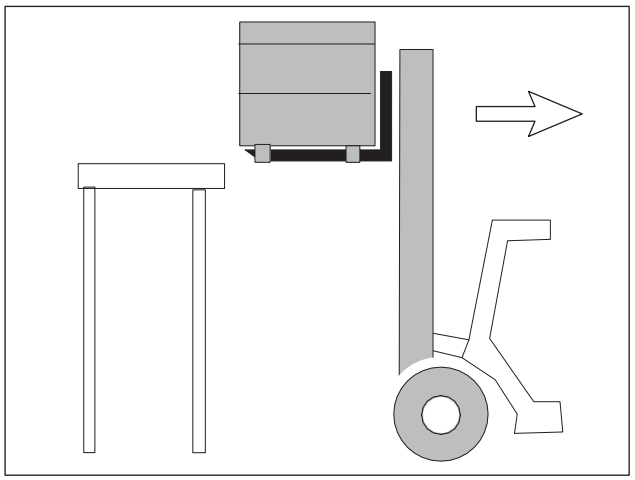

4.3.3 Transport loads

- When transporting goods, the load should be as close to the ground as possible with the lift mast tilted back and must be centered within the mast.
- The truck absolutely must not turn or travel in a horizontal direction when moving up a ramp.
- Gently accelerate with the accelerator pedal and slowly brake with the brake pedal. Be ready to brake at all times.
- Adapt your travel speed to the conditions of the route and the load you are transporting.
- Watch out for other traffic at crossings and passageways.
- Always travel with a lookout at blind spots.

  If the load is stacked so high that it affects forward visibility, then reverse.

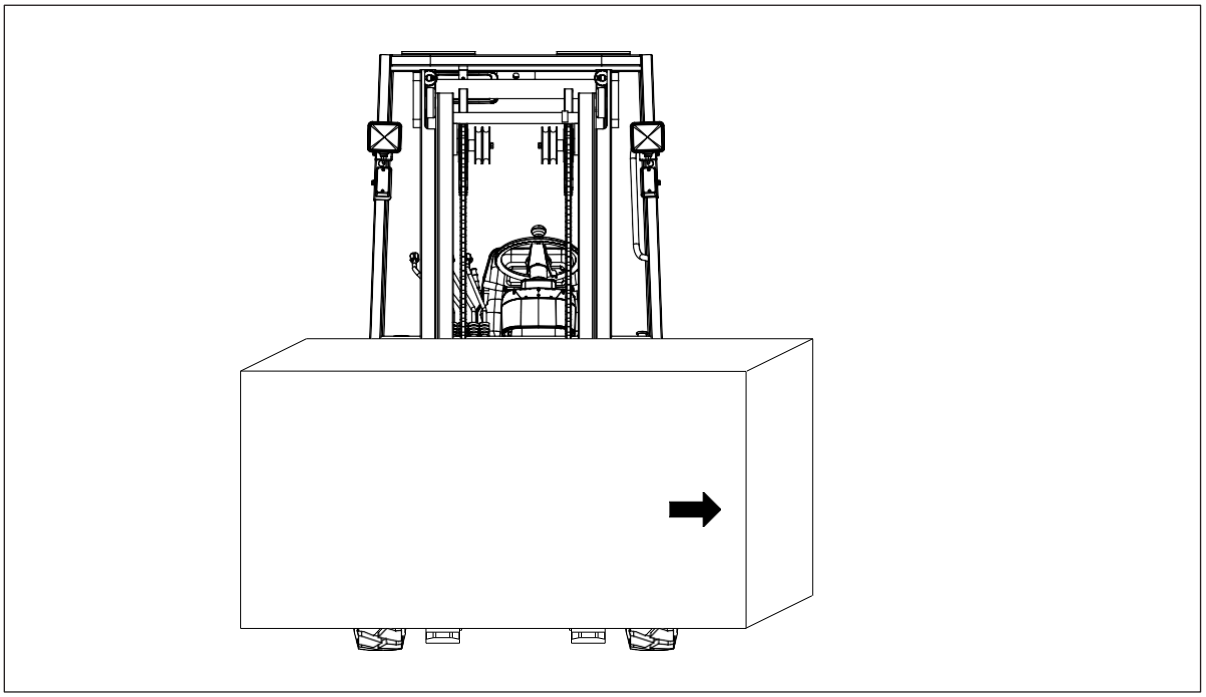

4.3.4 Depositing loads

- Drive the truck carefully up to the load handler.
- Lift the fork carriage to a suitable height.
- Place the lift mast in a vertical position.
- Proceed to where goods are to be placed.
- Slowly lower the goods until the fork arms can separate from the goods.
- Reverse the truck.

4.4 Transport

4.4.1 Location for lifting and/or slinging points

Forklift trucks are intended for loading, unloading, and short-distance travel. They are not designed for long-distance transport under their own power.

If the forklift must be transported over a long distance, use a truck, train, or ship that offers sufficient load capacity and meets all applicable transport regulations.

- Attach the wire ropes (3) securely to the fastening points (5)
- Attach the wire ropes (2) to the lifting holes located on both ends of the outer mast crossbar.
- Hook all sling ends into the lifting hook (1) of the hoist.

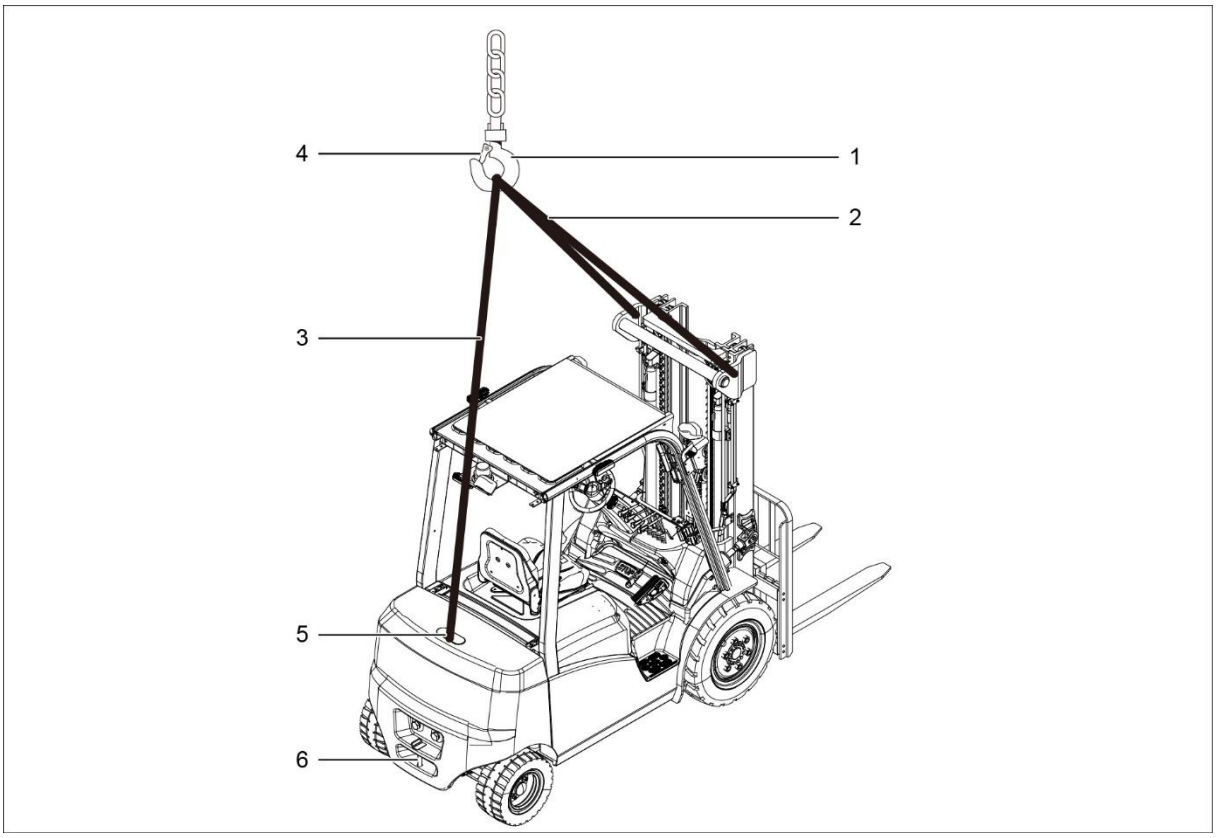

NOTE

The wire rope fastened to the counterweight end must pass through the gap in the overhead guard, without putting stress on the overhead guard.

WARNING

- Ensure that no one is in the working area of the hoist when using it to lift the truck!
- Walking around under the lifted load is absolutely prohibited.
- Fully tilt the mast backward when lifting.
- When assembling lifting tool, notice that the lifting tool will not touch forklift part or overhead guard when lifting.
- Do not lift a forklift by its cab frame (overhead guard).

4.4.2 Securing the truck for transport

- Park the forklift on the lorry or trailer and Lower the lift mast.
- Apply the parking brake pedal.
- To lash the fork lift truck with a lifting mast installed use the holes on the top cross beam of the mast and the trailer coupling pin.
- To lash the fork carriage.
- The truck can now be transported.

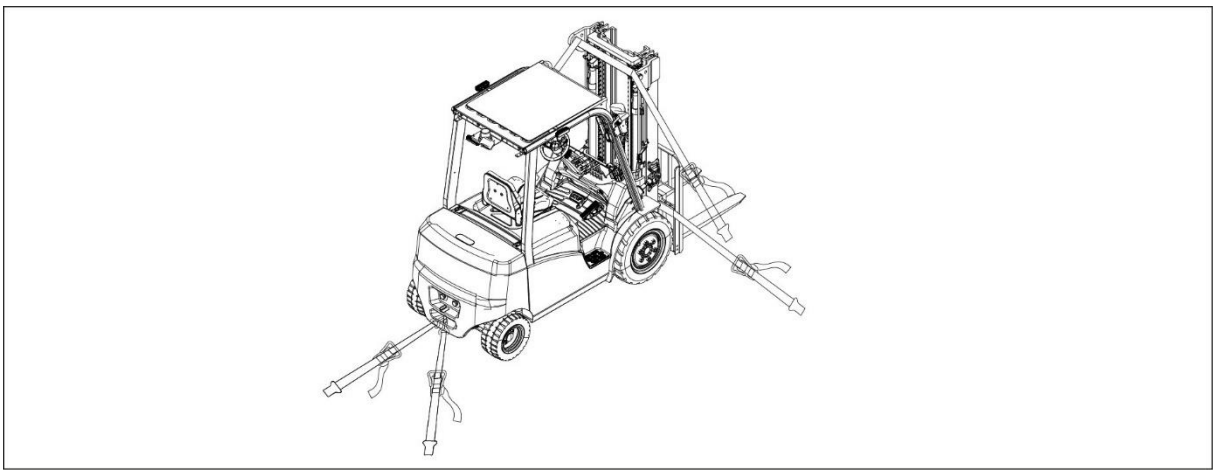

⚠ WARNING

- If the truck is to be transported without a mast, it must be tied at the front overhead guard.
- When fixing forklift, take effective measures according to specific condition to guarantee the *safety of transportation.*
- Correctly fix the forklift when transporting by lorry or trailer.
- Chock the forklift to avoid accident movement.
- Only use tension belt with big enough nominal strength or fasten the belt to fix the truck.

4.4.3 Towing

When the truck needs to be moved, a tow rope or rod can be attached to the towing bar (6). A tow rope can also be attached to the base of the lift mast.

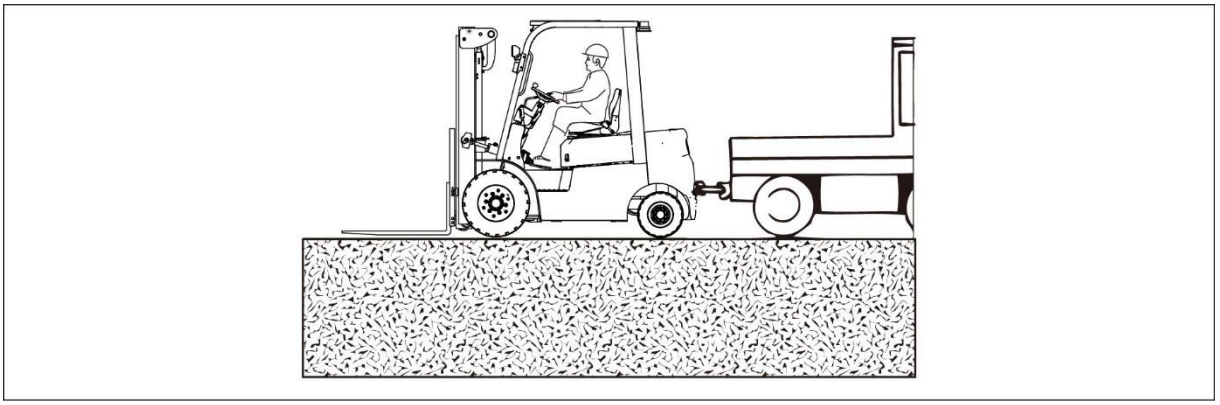

⚠ CAUTION

Braking can only be performed by the brake pedal or parking brake *during towing.*

You can tow the forklift to the safe place with towing bar (6) when the forklift can't run. Don't tow the truck of which its steering system or brake system has been damaged.

- Place the travel direction lever in neutral.
- Lower the forks fully to the ground or ensure they do not contact the ground during towing.
- Apply the parking brake.
- Turn the key switch off.
- Disconnect the battery, if necessary.
- Inspect the tow bar and the coupling device of the towing vehicle for damage.
- With the help of a second person, guide the towing vehicle into position.
- Secure the tow bar to the towing eye of the towing vehicle and the truck.
- Sit in the driver's seat of the truck being towed and fasten the seat belt.
- Release the parking brake.
- Tow the truck carefully.
- After towing, prevent the truck from rolling by applying the parking brake or using wheel chocks.
- Detach the towing bar or rope.

NOTE

The driver should operate the steering wheel during towing, and the brake when necessary.

DANGER

- If the towing vehicle brakes, there is a risk that the truck will drive into the towing vehicle!
- If a rigid connection has not been used for power transmission in two directions during towing, the truck may drive into the towing vehicle when the towing vehicle brakes. Use a tested tow bar for safety reasons.
- Only use a tested tow bar to ensure safe operation.

4.5 Battery and charger

4.5.1 Information for battery and charger

► **CBH 2.0**

Battery type	Voltage / rated capacity	Charger	Charging time [h] [3)]
Lithium-ion Battery	80 V / 230 Ah (ZL80230-43)	25 A (integrated)	around 9.2
Lithium-ion Battery	80 V / 230 Ah (ZL80230-43)	60 A (integrated/external)	around 4.0
Lithium-ion Battery	80 V / 230 Ah (ZL80230-43)	100 A (external)	around 2.5
Lithium-ion Battery	80 V / 230 Ah (ZL80230-43)	150 A (external)	around 1.5

[3] 0 % -> 100 %

► **CBH 2.5**

Battery type	Voltage / rated capacity	Charger	Charging time [h] [4)]
Lithium-ion Battery	80 V / 230 Ah (ZL80230-78)	60 A (external)	around 4.0
Lithium-ion Battery	80 V / 230 Ah (ZL80230-78)	100 A (external)	around 2.5

► **CBH 3.0**

Battery type	Voltage / rated capacity	Charger	Charging time [h] [5)]
Lithium-ion Battery	80 V / 230 Ah (ZL80230-78)	60 A (external)	around 4.0
Lithium-ion Battery	80 V / 230 Ah (ZL80230-78)	100 A (external)	around 2.5

► **CBH 3.5**

Battery type	Voltage / rated capacity	Charger	Charging time [h] [6)]
Lithium-ion Battery	80 V / 280 Ah (ZL80280-78)	100 A (external)	around 3.0

[4] 0 % -> 100 %
[5] 0 % -> 100 %
[6] 0 % -> 100 %

4.5.2 Safety regulations for charging the battery

- Avoid the existence of any metal object in the surface of the battery.
- Do not pierce the battery case with nails or other sharp objects.
- Do not short-circuit the battery with wires or other metal objects!
- The plug connection parts should be inspected in terms of obvious damages before charging.
- Fire-fighting equipment must be kept in the charging place.
- Before charging, check if there is damage on cable connection and plug connection pieces.
- Do not use irregular charging sockets.
- Charging in non-charging area is prohibited.
- No inflammable substances or spark-generating materials being present or stored within a distance of 2 meters of the truck parked for battery charging.
- No smoking or open fire around when charging.
- When charging, do not wrongly connect the battery polarity, otherwise it may damage the battery.
- The safety provisions related to the battery and the manufacturer of charging station must be strictly abode by.

⚠ WARNING

Risk of electric shock and fire due to insufficient or inappropriate residual current devices.

A lack of residual current devices or the use of inappropriate residual current devices can result in fatal injury due to electric shocks or electrical fires in the event of a fault.

- The owner must conduct an operational risk assessment of the usage location.
- An RCD switch (residual current device, circuit breaker) of type B or B+ must be used where necessary.

⚠ WARNING

- Damage to battery and charger!
- The charger must be matched to the battery in terms of voltage and charging capacity!
- Observe the correct combination of battery and charger to avoid overheating and fire hazard.
- Only use the charger that is suitable for the corresponding battery.

⚠ WARNING

There is a danger of sparks if charging is improperly interrupted.

Owing to the high charge currents, there is a risk of spark discharge if the charge connector is removed while charging is active. There is a risk of injury and of damage to the electrical contacts.

- Stop charging on the battery charger before removing the charge connector.
- Do not disconnect the mains cable or charge connector of the battery charger while charging (under load).

⚠ WARNING

Do not start charging immediately after operation. Begin charging only when the battery temperature (see position 3 on the display) is between 5 °C and 40 °C.

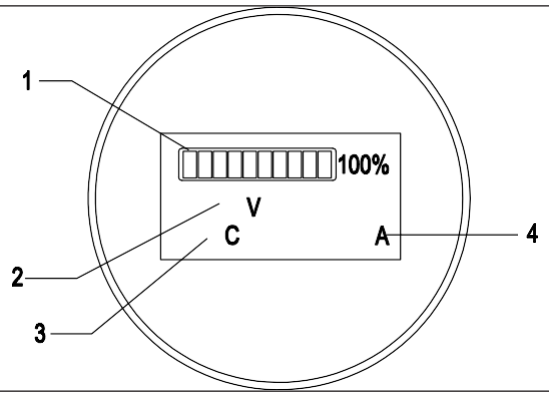

⚠ WARNING

- Output voltage, current and application range of the charger must match the battery, *otherwise it will influence the volume and service life of the battery.*
- Charging cable polarity must match the charger output terminal polarity.

⚠ WARNING

R*echarge the battery in time. Do not keep the battery fully discharged or lower than 20%.*

NOTE

Intermediate charging

Lithium-ion battery systems offer the advantage that they can be recharged temporarily, allowing industrial trucks to be charged at any time. As a result, shorter charging times can usually be achieved and charging with higher currents is also possible.

4.5.3 Charging Procedure with integrated charger (only CBH 2.0)

The integrated charger consisting of battery charger and battery controller must not be opened.

In case of malfunctions, the customer service or the manufacturer's customer service must be notified.

The charger may only be used for the batteries supplied by the manufacturer.

Swapping with other industrial trucks is not permitted.

The battery must not be connected to two chargers at the same time.

The mains connection may vary current on the size of the integrated charger.

Observe the correct voltage and amperage when using.

⚠ DANGER

- *Damaged and unsuitable cables can lead to electric shock and, due to overheating, to fire.*
- *Only use mains cables with a maximum cable length of 3 m.*
- *Unroll the cable reel completely when in use.*
- *Only use original mains cables from the manufacturer.*
- *Insulation protection classes and resistance to acids and alkalis must correspond to the manufacturer's mains cable.*

⚠ WARNING

Moving of a connected industrial truck with the mains socket switched off.

If an industrial truck is being charged at an external mains socket, the automatic immobiliser detects this process and deactivates the truck travel functions. When charging an industrial truck at a mains socket that can be switched off, the industrial truck can start moving when the socket is switched off because the immobilizer detects only live mains sockets. This can cause damage to the electrical building installation as well as electric shocks and electrically induced fires.

- Before commissioning the truck, disconnect the mains cable from the mains socket and stow away in the designated position on the truck.
- If no additional protective measures have been taken [7)], do not charge the industrial truck at a mains socket that can be switched off.
- This warning must be taken into account by the operating company when analysing the risk.

[7] *One possible protective measure is the optional equipment "plug detection, Interlock-function".*

► For 25 A Charger

- Insert the electric key switch and turn clockwise.
- Tilt the lift mast forwards slightly. The truck must be stationary on the ground.
- Apply the parking brake.
- Press the emergency stop switch.
- Pull the lever (1), then open the battery hood (2) carefully.
- Remove the charger plug (3) and the charging cable from the cable box.
- Unroll the charging cable completely.
- Check the cable and charger plug (3) of the integrated charger for visible damage before charging.
  If damage is identified, mark the truck accordingly and take it out of service until it has been properly repaired.
- Connect the charger plug (3) to the power supply.
  The travel function is interupted when the charger is powerd on and connected to an active power supply.

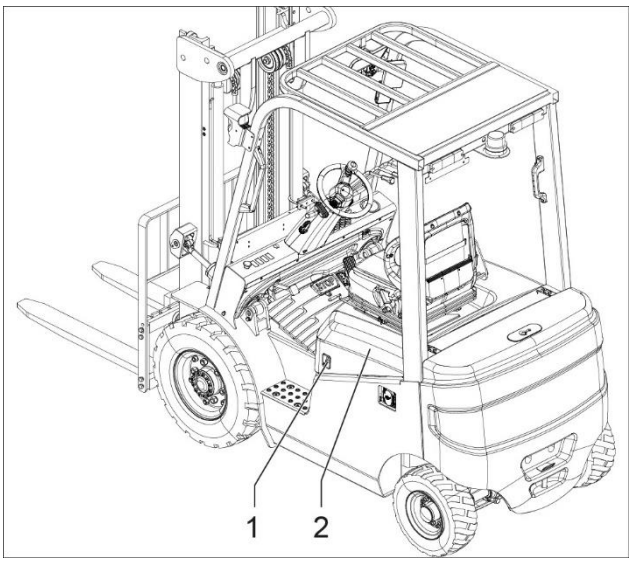

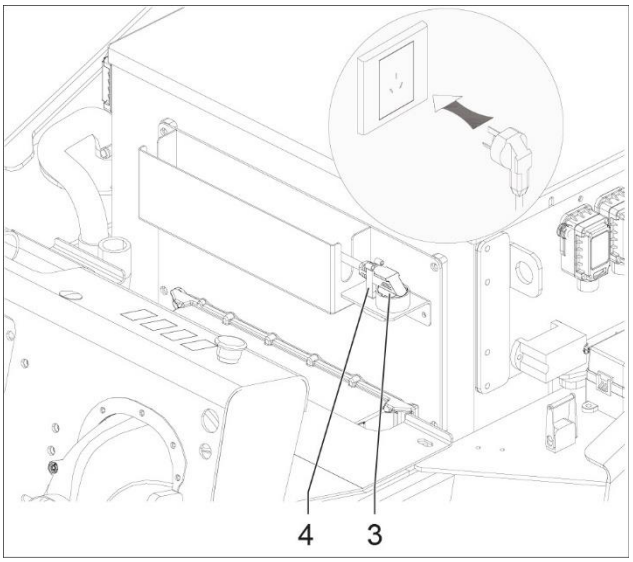

⚠ WARNING

The charging voltage is single-phase, ranging from 100V to 265V. The maximum input power is 2.77 KW for 25 A charger charger.
Please strictly implement the above data to prevent equipment damage and accidental risks such as fire.

- When the charging process is over:
  - Unplug the charger plug (3) by pulling the plug *(not the cable)* out of the power supply.
  - Roll up the charging cable.
  - **Always** stow the entire charger plug (3) and the charger cable in the cable box.

ⓘ NOTE

Optional equipment "plug detection, Interlock-function"
The truck with the optional equipment "plug detection, Interlock-function" can only travel when the connector (3) is secured and the switch (4) is closed automatically, as shown in the figure on the right.

- *Ensure that the charger plug (3) and the charger cable are not damaged when closing the battery hood (2).*

► For 60 A Charger

- Insert the electric key switch and turn clockwise.
- Tilt the lift mast forwards slightly. The truck must be stationary on the ground.
- Apply the parking brake.
- Press the emergency stop switch.
- Pull the lever (1), then open the battery hood (2) carefully.
- Remove the charger plug (3) and the charging cable from the cable box.
- Unroll the charging cable completely.
- Check the cable and charger plug (3) of the integrated charger for visible damage before charging.
  If damage is identified, mark the truck accordingly and take it out of service until it has been properly repaired.
- Connect the charger plug (3) to the power supply.
  The travel function is interupted when the charger is powerd on and connected to an active power supply.

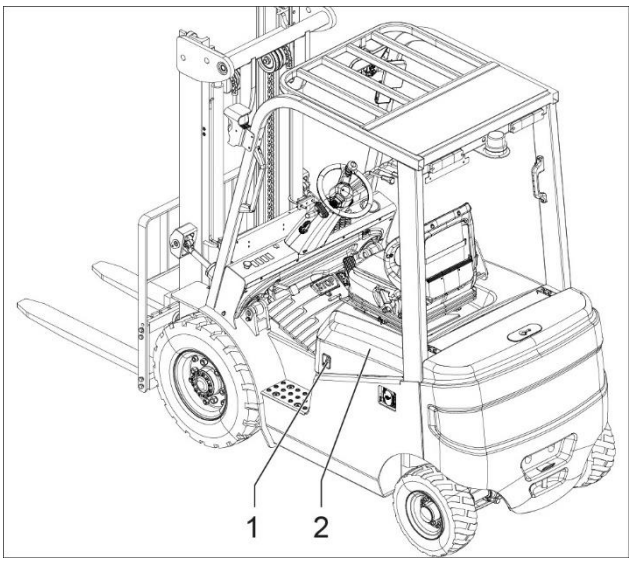

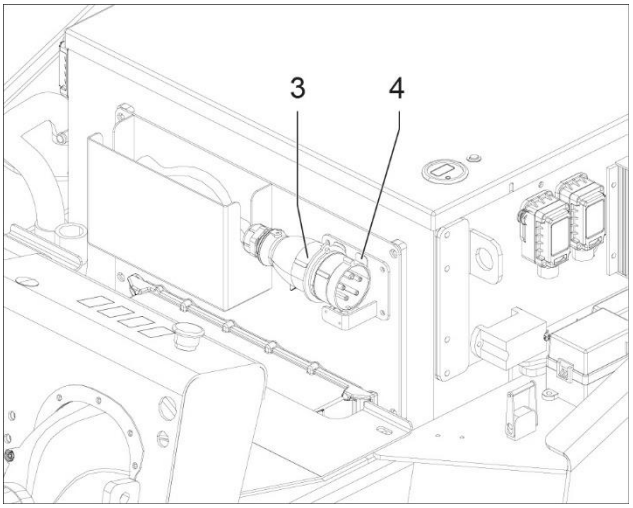

⚠ WARNING

The battery charging station should be plugged into a standard 380V, 3-phase, 50/60Hz walloutlet. Maximum input power power is 6.66KW for 60A charger.
Please strictly implement the above data to prevent equipment damage and accidental risks such as fire.

- When the charging process is over:
  - Unplug the charger plug (3) by pulling the plug *(not the cable)* out of the power supply.
  - Roll up the charging cable.
  - **Always** stow the entire charger plug (3) and the charger cable in the cable box.

ⓘ NOTE

Optional equipment "plug detection, Interlock-function"
The truck with the optional equipment "plug detection, Interlock-function" can only travel when the connector (3) is secured and the switch (4) is closed automatically, as shown in the figure on the right..

- *Ensure that the charger plug (3) and the charger cable are not damaged when closing the battery hood (2).*

4.5.4 Charging procedure with external charger

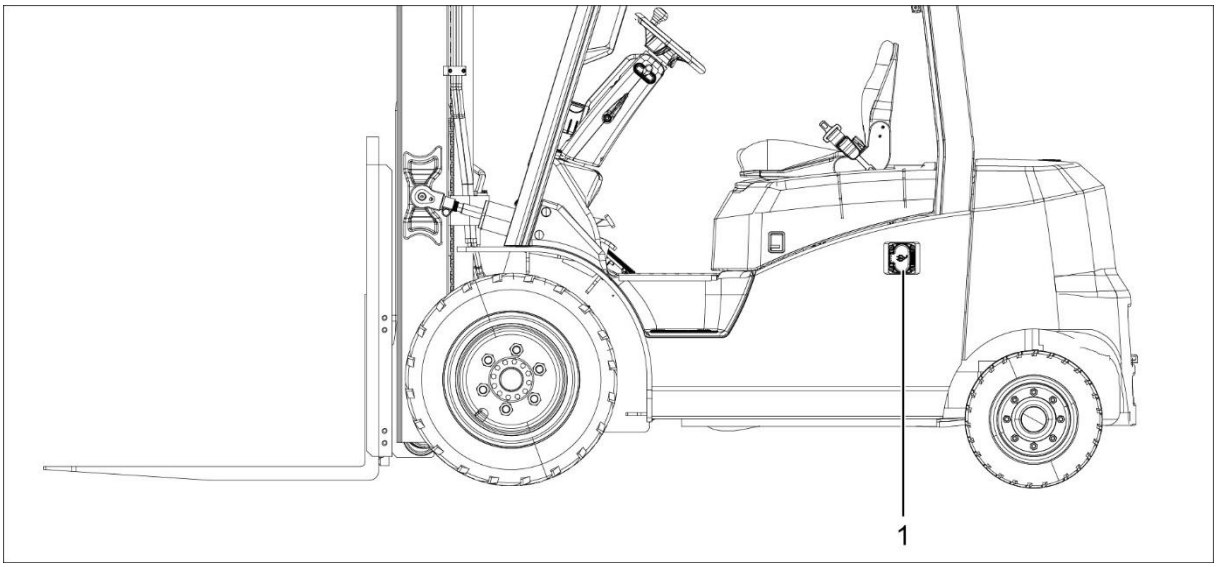

- Insert the electric switch key and turn clockwise.
- Tilt the lift mast forward slightly. The truck must be stationary on the ground.
- Apply the parking brake pedal.
- Press the emergency stop switch.
- Press the cover (1) and open automatically.
- Connect the charger connector to the battery *plug*.
- Switch on the charger and charge the battery in accordance with the battery and charging station manufacturers' instructions.
- After the battery is fully charged. First close the charger then remove the connector.

NOTE

The battery charging station should be plugged into a standard 380V, 3-phase, 50/60Hz walloutlet. The maximum input power of the charger may vary depending on the charger configuration. Please strictly implement the above data to prevent equipment damage and accidental risks such as fire.

⚠ WARNING

The battery plug may only be withdrawn or connected when the main switch and the charging equipment are switched off.

► **Checking the battery level**

- Apply the parking brake.
- Pull up the emergency stop switch to restore power to the system.
- Insert the key into the key switch and turn it clockwise.
- Check the battery discharge indicator to determine the current state of charge.

NOTE

Charge and maintain the battery in accordance with instructions from the manufacturer. If there are no instructions, please contact your maintenance agent. Optional battery chargers must also be operated according to instructions.

NOTE

Due to varying battery capacities, the duration of continuous operation with a fully charged battery may differ. Battery performance may be reduced in low-temperature environments.

► **Storage**

If batteries are taken out of service for a lengthy period they should be stored in the fully charged condition in a dry, frost-free room.

If the battery is not used for an extended period, it must receive a supplementary charge every month to prevent permanent damage to the battery.

4.5.5 Battery removal and installation

- Park the truck securely (see Section “Parking" on Page 69), and turn off the power before removal and installation of the battery.
- The truck must be parked on level ground. Place the battery connector or the battery cable in such a way that they will not get caught on the truck when the battery is withdrawn.
- When transporting batteries with the aid of a crane, ensure that the crane is of adequate capacity (the battery weight is indicated on the battery identification plate at the battery trough). The lifting gear must exert a vertical pull so that the battery container is not compressed. Attach the hooks to the battery hand(or battery strap) in such a way that the lifting gear, when slack, cannot collapse on the battery cells.
- When removing the battery make sure it does not get caught on the battery panel,causing the truck to tip over.
- After installing the battery, check all cables and plug connections for visible signs of damage. Ensure that the battery is firmly secured in the truck to prevent any damage caused by sudden movements of the truck. Whenever you replace the battery make sure it cannot slide. The battery cover must be securely closed and locked.

► Removal procedures (CBH 2.0)

- Park the truck securely (see Section “Parking” on Page 69) and turn off the power before removal and installation of the battery.
- Pull the lever (1), then open the battery hood (2) carefully.
- Remove the gas spring.

⚠ WARNING

When removing the gas spring, prevent the falling battery hood from clamping your fingers.

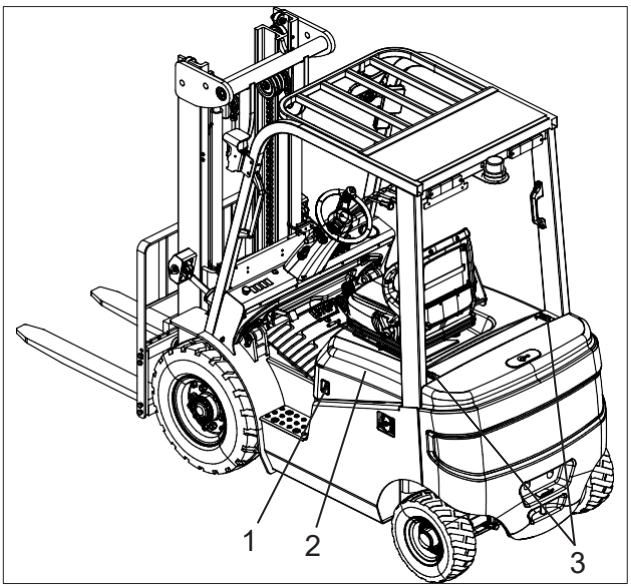

- Unscrew two screws (3) on the battery hood with seat.
- Remove the battery hood with the seat.

⚠ WARNING

The lithium battery is very heavy. Prevent crushing or pinching your hands during installation.

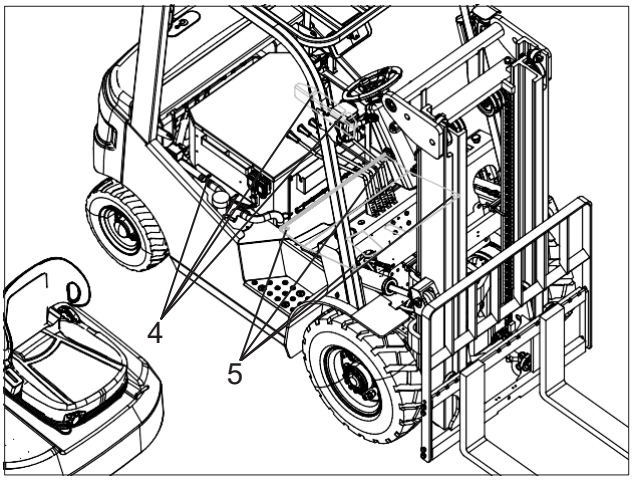

- Unscrew four screws (4) on the battery.
- Unscrew the four screws (5) holding the support plate and remove the foot pad and support plate.
- Remove the harness with controller.
- Discontect the battery plug.
- Lift the battery with charger assembly to a proper height through the sling tool and use another forklift to carefully fork out the battery from the side.

⚠ WARNING

Lift carefully. The lithium battery is very heavy.
Prevent crushing or pinching your hands during installation.

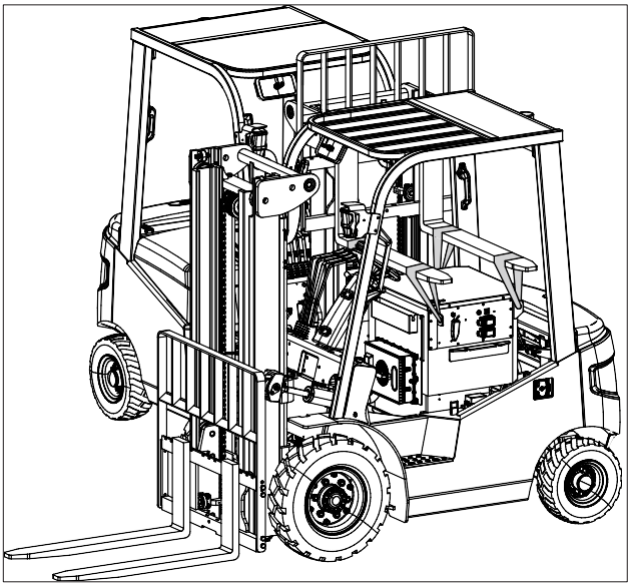

Install according to the reverse order of removal

⚠WARNING

After installing the battery hood:

- *Press the red button on the gas spring pipe to release the lock.*
- *Carefully lower the hood until it clicks into place.*
- *Keep hands clear of the hood and locking mechanism to prevent crushing or pinching injuries during closing.*

⚠CAUTION

Ensure that the battery is properly secured to prevent shifting or sliding.
If the battery cannot be fixed in place, contact your authorized dealer.

► **Removal procedures (CBH 2.5 | CBH 3.0 | CBH 3.5)**

- Park the truck securely (see Section “Parking” on Page 69) and turn off the power before removal and installation of the battery.
- Pull the lever (2), then open the battery hood (1) carefully.
- Remove the gas spring.

⚠ WARNING

When removing the gas spring, prevent the falling battery hood from clamping your fingers.

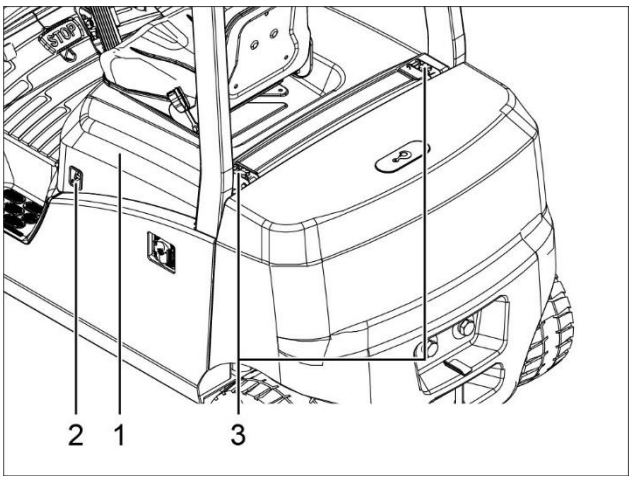

- Unscrew two screws (3) on the battery hood with seat.
- Remove the battery hood with the seat

⚠ WARNING

The lithium battery is very heavy. Prevent crushing or pinching your hands during installation.

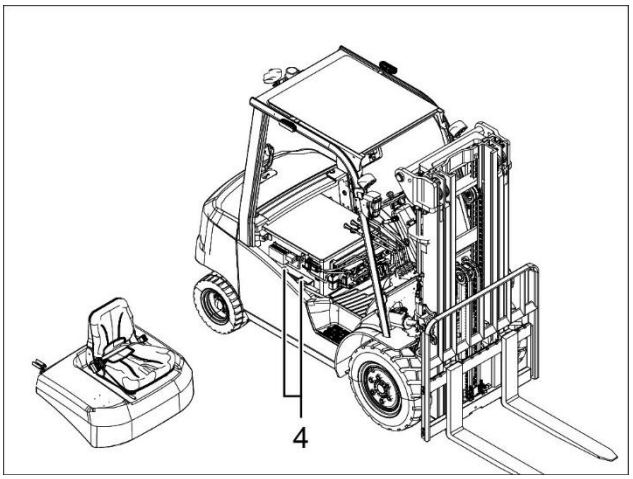

- Unscrew four screws (4) on the battery.
- Disconnect the harness with controller.
- Remove the plug between the lithium battery and the truck body.
- Lift the battery with controller assembly to a proper height through the sling tool and use another forklift to carefully fork out the battery from the side.

⚠ WARNING

- Lift carefully. The lithium battery is very heavy.
- Prevent crushing or pinching your hands during installation.

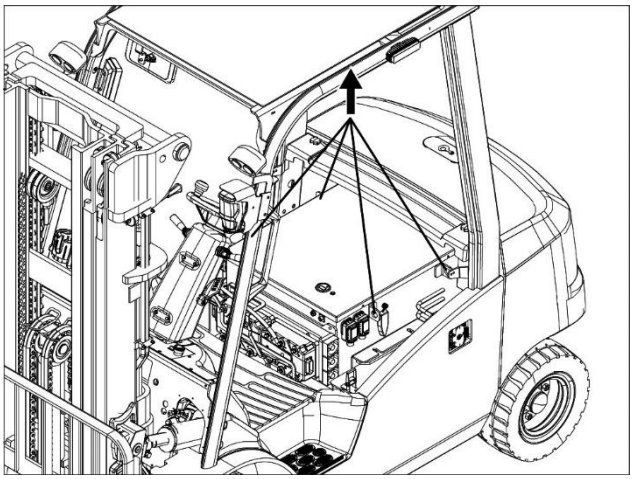

- Unscrew four screws (5) and positive and negative cable from the battery assembly.
- Remove the controller assembly from the battery assembly.

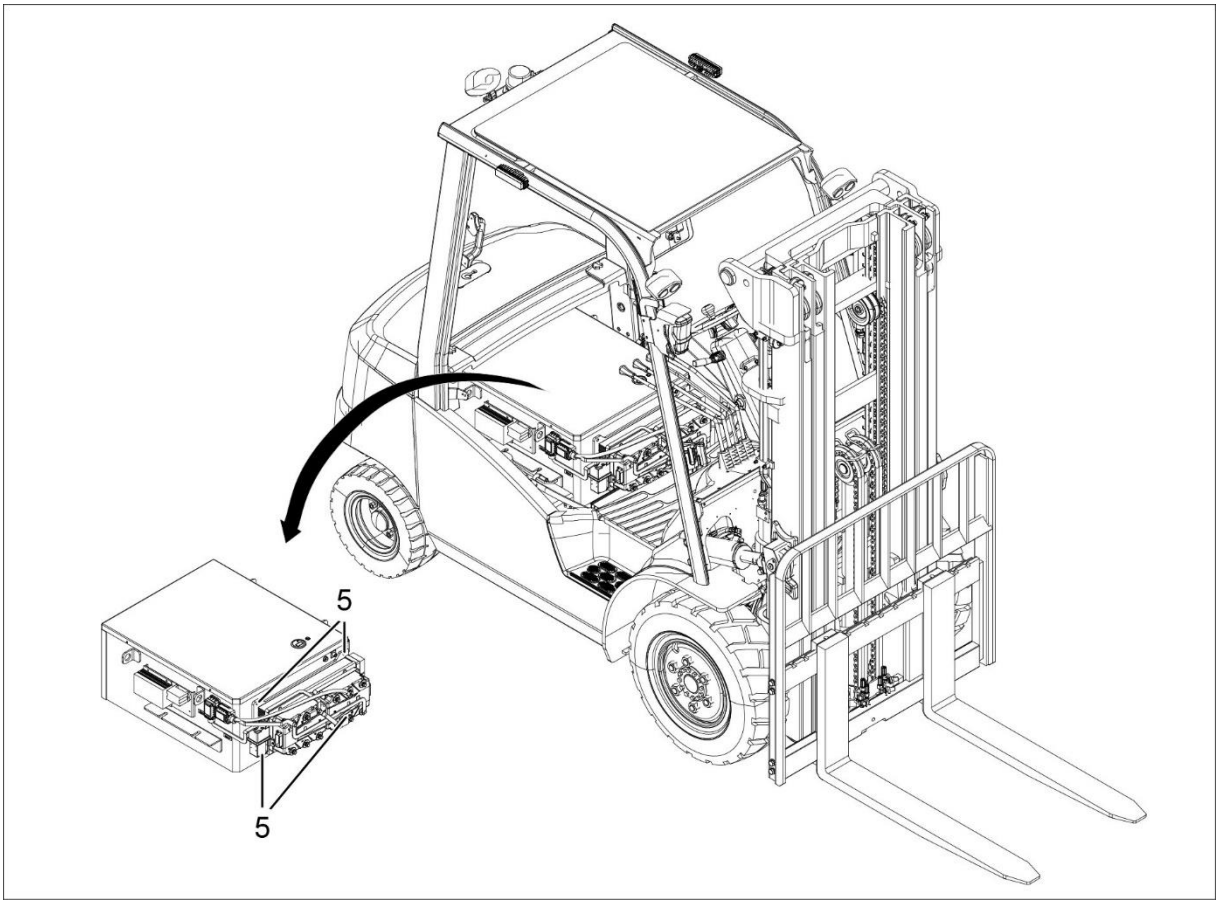

Install according to the reverse order of removal

⚠WARNING

After installing the battery hood:

- *Press the red button on the gas spring pipe to release the lock.*
- *Carefully lower the hood until it clicks into place.*
- *Keep hands clear of the hood and locking mechanism to prevent crushing or pinching injuries during closing.*

⚠CAUTION

Ensure that the battery is properly secured to prevent shifting or sliding.
If the battery cannot be fixed in place, contact your authorized dealer.

4.6 Cleaning

4.6.1 Cleaning the truck

► **Cleaning operations:**

No inflammable liquids must be used when cleaning the truck. Prior to commencing cleaning operations, all safety measures that are required to prevent sparking (e.g. by short circuits) have to be taken. For battery-powered trucks, the battery plug must be removed. Only weak pressure, weak compressed air and non-conducting, antistatic brushes must be used for the cleaning of electric or electronic assemblies.

⚠ WARNING

- Risk of fire due to flammable cleaning materials!
- Flammable cleaning materials can be ignited by hot components.
- Do not use any flammable cleaning materials.

⚠ CAUTION

- If water penetrates the electrical system, there is a risk of short circuit!
- Excessive water pressure or water and steam that are too hot can damage truck components.
- Abrasive cleaning materials can damage the surfaces of components!
- Using abrasive cleaning materials that are unsuitable for plastics can cause plastic parts to dissolve or become brittle. The screen on the display-operating unit could become cloudy.
- Adhere strictly to the following steps：

- Park the truck safely.
- Switch off the key switch.
- Do not spray electric motors and other electrical components or their covers directly with water.
- Use only high-pressure cleaners with a maximum output power of up to 50 bar and 85°C.
- If a high-pressure cleaner is used, maintain a distance of at least 20 cm between the nozzle and the object being cleaned.
- Do not aim the cleaning jet directly at adhesive labels or decal information.
- Remove all deposits and accumulations of foreign materials in the vicinity of hot components.
- Use only non-flammable fluids for cleaning.
- Clean plastics only with cleaning materials intended for plastics.
- Clean the truck exterior using water-soluble cleaning materials and water. Cleaning with a sponge or a cloth is recommended.
- Clean all accessible areas.
- Before lubrication, clean the oil filling openings and the area around the oil filling openings, as well as the lubricating nipples.

4.6.2 Cleaning the electrical system

Danger of electric shock due to residual voltage!

- Never touch components of the electrical system with bare hands.
- Cleaning with water may damage the electrical system.
- Do not clean electrical system parts with water.
- Use a metal-free brush to remove dust. Clean only with low-pressure compressed air.

⚠ WARNING

Do not use cold cleaners, chemical cleaning agents, or any fluids that are corrosive or contain acid or chlorine. These substances may damage the chains and are strictly prohibited!

4.6.3 Cleaning load chains

- Place a collection vessel under the lift mast.
- Clean with paraffin derivatives, such as benzine.
- When using a steam jet, do not use additional cleaning agents.
- Remove any water in the chain links using compressed air immediately after cleaning.
- Move the chain several times during this procedure.
- Immediately after drying the chain, spray it with chain spray. Move the chain several times during this procedure.

5 MAINTENANCE

5.1 Operational safety and environmental protection

- The servicing and inspection operations contained in this chapter must be performed in accordance with the intervals indicated in the service checklists.
- Only use original spare parts that have been certified by our quality assurance.
- Used parts and oils must be disposed of in accordance with the applicable environmental protection regulations. Upon completion of inspection and servicing, carry out the activities listed in the “Recommissioning ”section.

5.2 Maintenance safety regulations

► Lifting and jacking up

When a truck is to be lifted, the lifting gear must only be secured to the points specially provided for this purpose.

When jacking up the truck, take appropriate measures to prevent it from slipping or tipping over (e.g. wedges, wooden blocks).

► Service plan

Maintenance work must be carried out according to the hour meter. Please consult the truck's maintenance plan.

The service plan is followed by advice to facilitate work.

Maintenance intervals must be reduced if the truck is used under harsh conditions (extreme heat or extreme cold, large quantities of dust).

► Work on the electric system

Work on the electric system of the truck must only be performed by personnel specially trained for such operations. Before commencing any work on the electric system, all measures required to prevent electric shocks have to be taken. Take off the metal accessories from the hand before checking the forklift electrical system.

► Grade and quantity of lubricants and other consumables

Only lubricants and other consumables specified in these operating instructions are authorised for use during maintenance work.

Lubricants and other consumables required for truck maintenance are listed in the maintenance specifications table.

Never mix different qualities of grease or oil.

If it is absolutely necessary to change brands, make sure to flush thoroughly beforehand.

Before changing any filters or working on the hydraulic system, thoroughly clean the surface and the areas around the part. All containers used to pour oil must be clean.

► Working on the hydraulic equipment

The hydraulic system must be depressurised prior to all work on the system.

► Safety devices

After maintenance and repair work, all safety devices must be reinstalled and tested for operational reliability.

► **Servicing and maintenance personnel**

Only qualified personnel authorized by the owner or trained individuals are permitted to perform maintenance or repair work. All items listed in the Scheduled Maintenance Charts must be performed by qualified technicians only. They must have knowledge and experience sufficient to assess the condition of a truck and the effectiveness of the protective equipment according to established principles for testing trucks. Any evaluation of safety must be unaffected by operational and economic conditions and must be conducted solely from a safety standpoint.

Daily inspection procedures and simple maintenance checks, e.g. checking the hydraulic oil level may be performed by operators. This does not require training as described above.

► **Maintenance operations that do not require special training**

Simple maintenance operations such as checking the hydraulic fluid level can be carried out by persons with no special training. A specific qualification is not necessary. Complicated maintenance operations such as replacing the battery, replacing the wheels and so on should be carried out by the authorised service centre. Refer to the maintenance section of this manual for further information.

► **Battery maintenance staff**

Batteries must only be recharged, maintained and changed by specially trained personnel.

Personnel must follow the manufacturer's instructions of the battery, the battery charger and the truck.

It is essential to follow the battery maintenance instructions and the battery charger operating instructions.

► **Ordering spare parts and consumables**

Only original spare parts have been certified by our quality assurance department. To ensure safe and reliable operation of the truck, use only the manufacturer's spare parts. Used parts and oils must be disposed of in accordance with the relevant environmental protection regulations. For oil changes, contact the manufacturer’s specialist department.

► **Settings**

When repairing or replacing hydraulic, electric or electronic components or assemblies, always note the truck specific settings.

5.3 Servicing and inspection

Thorough and expert servicing is one of the most important requirements for the safe operation of the counterbalance lift truck. Failure to perform regular servicing can lead to truck failure and poses a potential hazard to personnel and equipment.

The service intervals stated are based on single shift operation under normal operating conditions. They must be decreased accordingly if the truck is to be used in conditions of extreme dust, temperature fluctuations or multiple shifts.

The following maintenance checklist states the tasks and intervals after which they should be carried out. Maintenance intervals are defined as:

W	Every 50 service hours, at least once per week, performed by operator or service technician
A	Every 250 operating hours, at least once a month and a half, performed by operator or service technician
B	Every 500 operating hours, at least once per quarter, performed by operator or service technician
C	Every 1000 operating hours, at least once half year, performed by operator or service technician
D	Every 2000 operating hours, at least once per year, performed by operator or service technician

In the run-in period - after approx. 100 service hours - or after repair work, the owner must check the wheel nuts/bolts and re-tighten if necessary.

5.3.1 Operator

Simple maintenance operations can be carried out by persons with no special training.
A specific qualification is not necessary.

		Maintenance interval ●				
		W	A	B	C	D
Before starting Maintenance work:	Parking the truck securely and cut off the power supply. Using wooden blocks to prevent wheel from moving.					
	Clean the fork lift truck if necessary					
	Check the time and date settings on the display unit.					
	adjust if necessary.					
	Check for error codes.					
Functions and Control	Check the functions of the operation switches and display	●				
	Check all warning devices for proper function.	●				
	Check parking brake functions	●				
	Check the emergency switch functions	●				
	Check the steering wheel functions	●				
	Check the seat switch functions	●				
	Check accelerator pedal functions	●				
Power Supply & Drive System	Check the battery charge connector				●	
	Check the drive wheel and steering wheel for wear or damage				●	

		Maintenance interval ●				
		W	A	B	C	D
Chassis System	Check front and rear wheel fastenings and tighten. (after each maintenance or repair, at the latest after 100 hours).		●			
Operating devices	Checking the joystick pad			●		
	Check the horn for correct function.			●		
Mast System	Clean and lubricate the rolling surface of lift mast column with grease		●			
	Check and lubricate mast rollers			●		
	Check the side shifter functions (if necessary)	●				
	Visual inspection of rollers, sliders and stoppers				●	
Hydraulic System	Check the functions of hydraulic system	●				
	Check the gear pump for unusual noise				●	
	Check the hydraulic oil level				●	
Braking System	Test the release of brake pedal is normal	●				
	Test the release of emergency stop switch is normal	●				
	Test parking brakes is normal	●				
	Check the brake cylinder and piping connections for leaks			●		
Other	Check the seat belt and functions	●				
	Check covers for damages					●
	Check if the optional features are functioning properly	●				

NOTE

If the forklift truck is used in an extreme environment (such as excessive heat, excessive cold or areas with high dust concentrations), the time intervals given in the maintenance tables should be decreased accordingly.

5.3.2 Specialist (Service technician)

Complex tasks or maintenance operations must only be carried out by personnel who have received specific professional training or hold the necessary qualifications. These operations require specialized knowledge and skills to ensure safety and proper functionality.

		Maintenance interval ●				
		W	A	B	C	D
Before starting maintenance work:	Parking the truck securely and cut off the power supply. Using wooden blocks to prevent wheel from moving.					
	Clean the fork lift truck if necessary					
	Check the time and date settings on the display unit. Adjust if necessary.					
	Check for error codes.					
Functions and Control	Check the cables for damage and if the terminals are secure		●			
	Check and tighten the controllers and contactors					●
	Check fault information records and operating hours				●	
Power Supply & Drive System	Check the battery cables for damage and replace if necessary				●	
	Ensure secure cable connections between individual battery cells. If necessary, apply dielectric grease to the battery terminals.				●	
	Check electrolyte fluid level (featuring lead-acid battery)				●	
	Check electrolyte density (featuring lead-acid battery)				●	
	Check battery temperature				●	
	Check battery locking mechanism (if necessary)					
	Check and tighten motor mounting bolts					●
	Check the connections of motor connectors					●
	Check all bearing positions for unusual noise or signs of wear				●	
	Check heavy duty gear oil level				●	
	Clean or replace gear oil				●	
	Check the gearbox for abnormal noise or leaks				●	
	Check the drive wheel and steering wheel for wear or damage				●	
	Check and lubricate the wheel bearings				●	
	Check the travel speed				●	

		Maintenance interval ●				
		W	A	B	C	D
Chassis System	Mast and tilt cylinders, Check fastening.			●		
	Check the counterweight, motors, chassis, speed reduction gearbox, overhead guard and steering axle fastenings.			●		
	Check and lubricate the other pins and swivel points.			●		
	Check the chassis for cracks or damages					●
	Check/lubricate the steering axle.			●		
Operating devices	Checking and lubricating the pedal mechanisms			●		
Mast System	Check the mast for damages					●
	Check the fixation of lift mast				●	
	Check the tubing on mast for connections and leaks			●		
	Check and lubricate the chains			●		
	Check and adjust the lifting chains.				●	
	Check the fork carriages for wear and damage				●	
	Check the lifting and lowering speed					●
Hydraulic System	Check if the hoses, pipes and interfaces are fastened or sealed securely, and check if there is damage				●	
	Check the connections of pump motor connectors					●
	Check and tighten pump motor mounting bolts					●
	Check the gear pump for unusual noise				●	
	Check the gear pump fixation and check for leaks				●	
	Check the cylinders for leaks				●	
	Check the cylinders for damages and check the fixation					●
	Check the oil tank fixation and check for leaks					●
	Check the hydraulic oil level					●
	Clean or replace the hydraulic oil					●
	Check and clean oil tank air filter				●	
	Replace the oil tank air filter and filter					●
	Check the relief pressure					●
Braking System	Test the release of brake pedal is normal	●				
	Check the brake fluid level			●		
	Check the release of brake pedal is normal			●		
	Check the braking distance of brake				●	
Other	Check if the decals are clear and complete				●	
	Carry out a functional test and test drive.				●	

NOTE

If the forklift truck is used in an extreme environment (such as excessive heat, excessive cold or areas with high dust concentrations), the time intervals given in the maintenance tables should be decreased accordingly.

5.3.3 Periodic replacement of safety-critical parts

- Some parts are difficult to inspect during periodic maintenance. Therefore, in order to further improve safety, users should carry out periodic replacement of the parts listed in the following table.
- If any of these parts are found to be damaged or faulty before they are due for replacement, they should be replaced immediately.

Name of safety-critical part	Useful life (years)
Brake hose or rigid pipe	1~2
Lifting system hydraulic hoses	1~2
Lifting chain	2~4
Hydraulic system high-pressure hoses	6
Brake fluid cup	2~4
Hydraulic system inner seals and rubber parts	2
Cushion for steering axle	4
Direction selector switch	8

Table.3:Periodic replacement of safety-critical parts

5.4 Lubrication points

5.4.1 Lubricant chart

Improper operations may pose hazards to the operator's health and life, as well as to the surrounding environment.

When storing or adding lubricant, use clean containers. It is strictly forbidden to mix different types and specifications of lubricants (except for those can be mixed under clear statement).

⚠ CAUTION

The use and disposal of lubricants must be carried out in strict accordance with the manufacturer's regulations.

► **CBH 2.0**

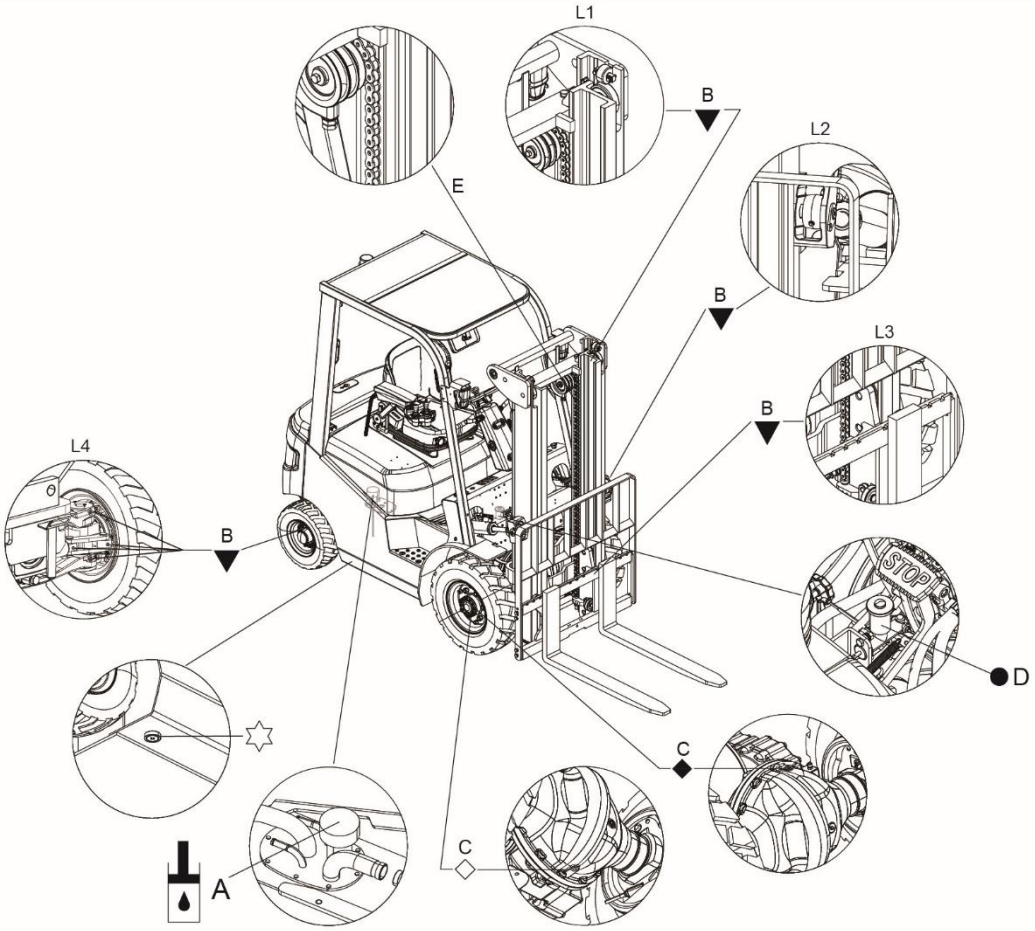

▼ Contact surface

Hydraulic oil injection

◆ Gear oil injection nozzle

◇ Gear oil discharge

● Brake fluid

Hydraulic oil discharge

► CBH 2.5 | CBH 3.0 | CBH 3.5

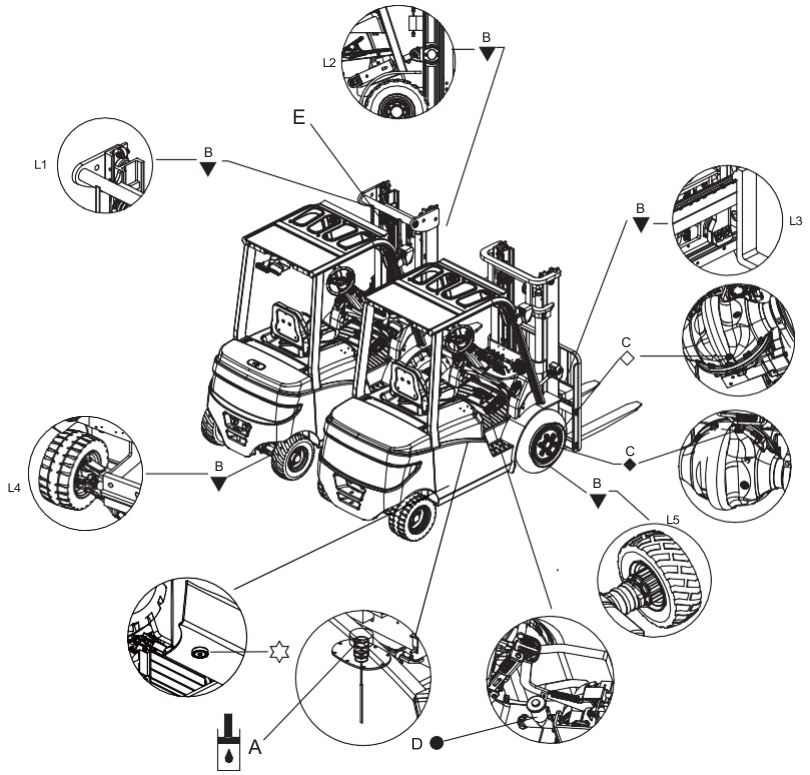

▼ Contact surface

Hydraulic oil injection nozzle

◆ Gear oil injection nozzle

◇ Gear oil discharge nozzle

● Brake fluid

☆ Hydraulic oil discharge nozzle

5.4.2 Lubricant table

► **CBH 2.0**

Lubricants – CBH 2.0				
Code	**Type**	**Specification**	**Amount**	**Position**
A	Hydraulic oil	L-HM32 (Cleanliness grade 9, in compliance with NAS1638)	See the following tables on the next page	Hydraulic System
B	Multi-purpose grease or general purpose lithium grease 3#	Polylub GA352P/ Grease3#	Appropriate amount	Contact Surface (See Table2)
C	Heavy duty gear oil	85W-90GL-5	≈ 7.5 L	Drive axle
D	Brake Fluid	ZSM207DOT4	After the gas within the system is completely discharged, add to 2/3 of the oil cup	Brakes
E	Spray chain	/	Appropriate amount	Mast chain

NOTE

Fill until the oil just starts flowing from the level plug. Approx. 7.5L (may vary by model and conditions). If the oil level is 1-2 cm below the plug, no oil is needed. Only add oil if it's significantly lower.

⚠ WARNING

Be careful when adding and avoid dropping when lubricating on high position. Chain lubrication: Coat the lift guide wheel and the contact surfaces on the inner and outer sides of the mast with a layer of grease etc.

Contact Surface Lubrication Table	
Code	**Position**
L1	Steel channel,Rollers
L2	Tilt cylinder connetor
L3	Fork Carriage
L4	Steering axle

CBH 2.0 - Application Amount of Hydraulic Oil		
Mast Series	**Lifting height (mm)**	**Amount (L)**
2-stage Mast *(Duplex Mast)*	3000	22.69
	3300	23.57
	3500	24.16
	3600	24.45
	4000	25.63
	4500	27.10
2-stage Full Mast *(2-Free Mast)*	3000	30.11
	3300	31.63
	3600	33.15
3-stage Mast *(3-Free Mast)*	4300	30.66
	4500	31.57
	4800	32.70
	5000	33.34
	5500	35.30
	6000	37.25

► **CBH 2.5 | CBH 3.0 | CBH 3.5**

Lubricants – CBH 2.5 | CBH 3.0 | CBH 3.5				
Code	**Type**	**Specification**	**Amount**	**Position**
A	Hydraulic oil	L-HM46 (Cleanliness grade 9, in compliance with NAS1638)	See the following tables on the next page	Hydraulic System
B	Multi-purpose grease or General Lithium-based Grease	Polylub GA352P or Grease3#	Appropriate amount	Contact Surface or lubricating nozzle
C	Heavy duty gear oil	85W-90(GL-5)	≈ 7.5 L	Drive axle
D	Brake Fluid	DOT3	After the gas has been fully discharged from the system, fill the oil reservoir to approximately two-thirds of its capacity.	Brakes
E	Anti-rust oil	Chain spray or engine oil	Appropriate amount	Mast chain

NOTE

Fill until the oil just starts flowing from the level plug. If the oil level is 1-2 cm below the plug, no oil is needed. Only add oil if it's significantly lower.

⚠ WARNING

Be careful when adding and avoid dropping when lubricating on high position. Chain lubrication, Coat the lift guide wheel and the contact surfaces on the inner and outer sides of the mast with a layer of grease.etc

Contact Surface Lubrication Table	
Code	**Position**
L1	Steel channel,Rollers
L2	Lubricating nozzle for Tilt cylinder
L3	Fork Carriage
L4	Lubricating nozzle for Steering axle
L5	Lubricating nozzle for driving axle (if necessary)

CBH 2.5 - Application Amount of Hydraulic Oil		
Mast Series	**Lifting height (mm)**	**Amount (L)**
2-stage Mast *(Duplex Mast)*	2700	22.69
	3000	23.57
	3600	25.34
	4000	26.52
2-stage Full Mast *(2-Free Mast)*	3000	30.11
	3300	31.63
	3600	33.15
3-stage Mast *(3-Free Mast)*	4300	30.66
	4500	31.57
	4800	32.70
	5000	33.34
	5500	35.30
	6000	37.25

CBH 3.0 | CBH 3.5 - Application Amount of Hydraulic Oil		
Mast Series	**Lifting height (mm)**	**Amount (L)**
2-stage Mast *(Duplex Mast)*	2700	35
	3000	35
	3300	35
	3600	35
	4000	40
	4500	40
	5000	42
2-stage Full Mast *(2-Free Mast)*	3000	40
	3330	40
	3600	42
3-stage Mast *(3-Free Mast)*	4300	40
	4500	40
	4800	40
	5000	45
	5500	45
	6000	45
	6500	50
	7000	50

5.5 Maintenance instructions

▶ **Prepare the truck for maintenance and repairs**

All necessary safety measures must be taken to avoid accidents when carrying out maintenance and repairs. The following preparations must be made:

- Park the truck securely (see Section "Parking" on Page 69).
- Remove the key to prevent the truck from improper operation.
- When working under a raised lift truck, secure it to prevent it from tipping or sliding away.

▶ **Open the battery hood**

Pull the lever (1), then open the battery hood (2) carefully.

▶ **Checking the status and tightness of the electrical cables, electrical connections and plug connectors (if required)**

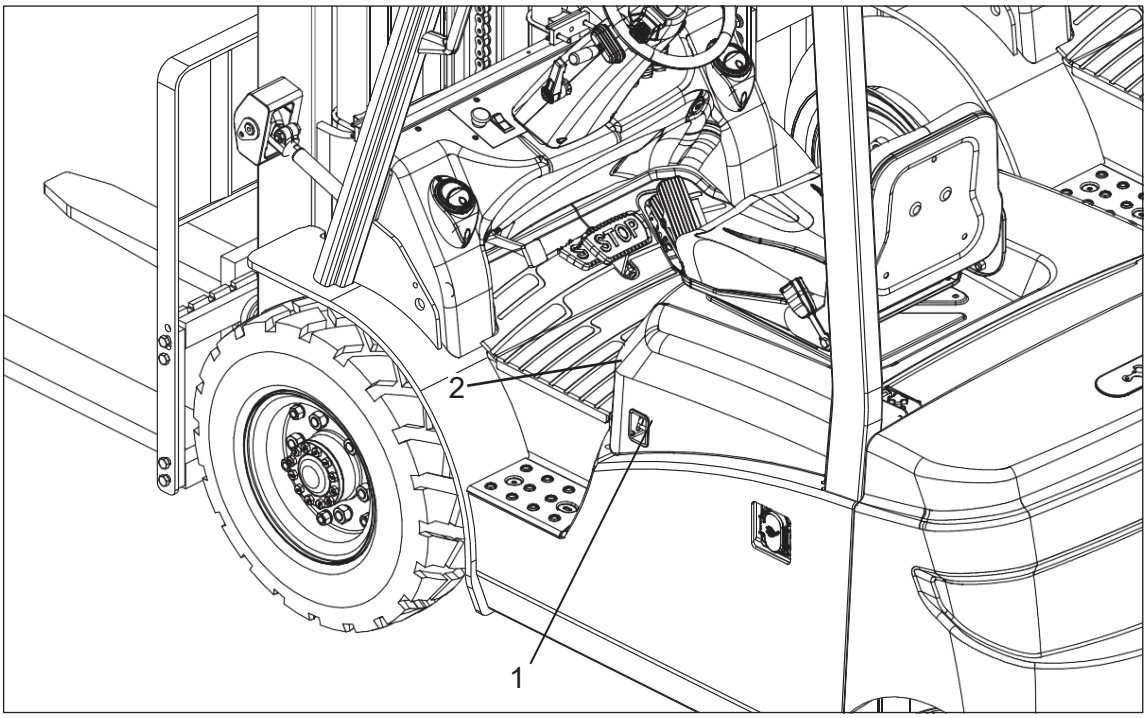

⚠ CAUTION

The use and disposal of lubricants must be carried out in strict accordance with the manufacturer's regulations. Press the emergency stop button before carrying out this maintenance task.

- Open the battery cover (see Section "Open the battery hood").
- Motor terminals: check the tightness of the connections and whether there is any oxidation or rust.
- Check that the battery cables are secure.
- Check the cables whether there is damage to the insulation and the tightness of the connections.

ⓘ NOTE

- Oxidized and rusted connections and broken cables will lead to a drop in voltage, causing the *truck to malfunction.*
- Remove the oxidized rust then lubricate or replace the broken cables.

▶ Checking whether the Drive Axle or hydraulic is leaking

Check the lubrication ports on the bottom of Drive Axle.
If there is leakage, please contact your dealer.

▶ Checking the gear oil level and replace gear oil

- Check the gear oil level using the dipstick or sight glass.
- Ensure the equipment is on a level surface.
- Remove the fill plug or cap from the drive axle.
- Wipe the area around the fill hole to prevent contamination.
- Use the appropriate tool to remove the drain plug from the drive axle.
- Allow the old gear oil to drain completely into a suitable container.
- Clean the drain plug and inspect it for damage or wear.
- Replace the drain plug and tighten it securely.
- Refill the drive axle with the recommended gear oil to the proper level.
- Reinstall the fill plug or cap and tighten it.
- Start the equipment and check for any leaks around the drive axle.
- If necessary, add more gear oil to reach the correct level.
- Dispose of the old gear oil according to local regulations.
- Record the maintenance activity in the equipment's service log.

▶ Check the hydraulic oil level

- Prepare the truck for maintenance and repairs
- Open the battery hood (see Section "Open the battery hood").
- Remove the oil cover (1).
- Fill the hydraulic oil up to the proper amount (See Table “Application Amount of Hydraulic Oil”).
- Reinstall the oil cover.

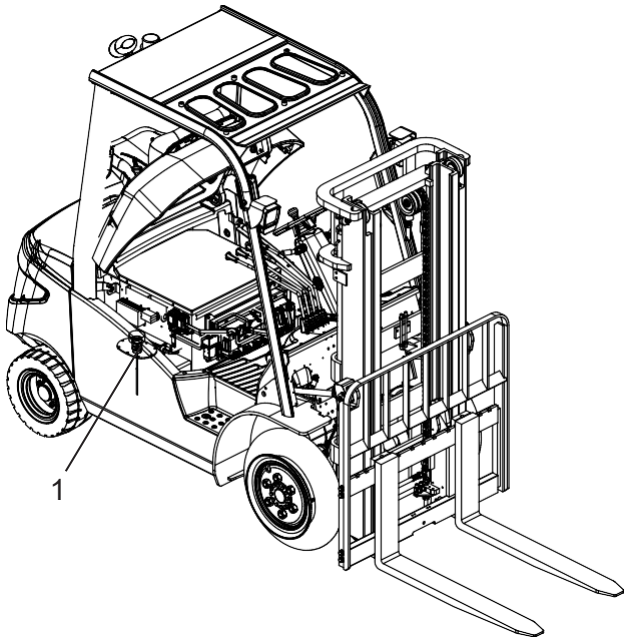

⚠ WARNING

Please follow the procedures for the safe handling of oil and lubricating grease.

ⓘ NOTE

The oil level can only be checked after lowering the lift mast.

▶ Replace hydraulic oil and oil filter (CBH 2.0)

Hydraulic oil should be changed every 2000h;

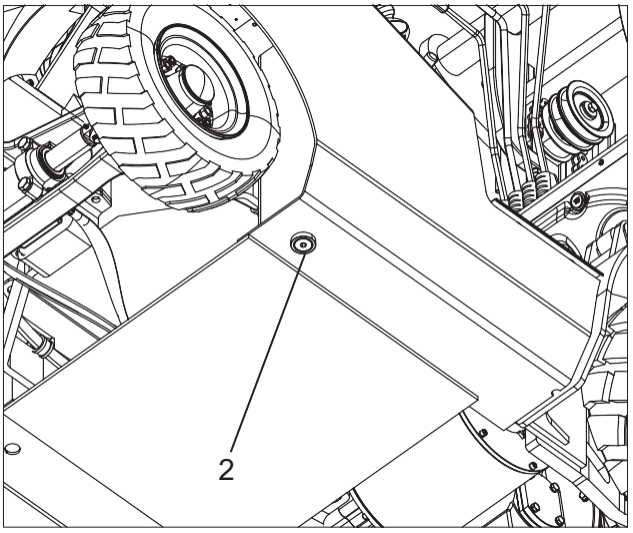

- Park the truck on level ground;
- Turn the steering wheel right to the end, make the oil drain plug have enough space;
- Tilt the mast backward to the end and drop the forks on the ground;
- Apply the parking brake;
- Open the cover, screw off the oil filler cap(1) of the fuel tank, and take out the dipstick;
- Put one container under the truck frame, remove oil plug(2), and drain oil;
- Take away the container, dispose waste oil according to local environmental law, and do not dump at will;
- Screw back the drain plug(2), add new hydraulic oil and check for leakage;
- Start forklift, raise forks for 3-5 times, and tilt the mast forward or backward for 3-5 times;
- Add oil to specified scale.

▶ Replacing the hydraulic oil filter (CBH 2.0)

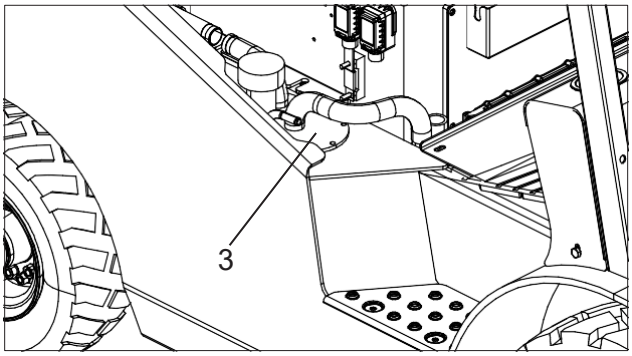

The oil filter is installed inside the oil tank. Before replacing the filter, the oil tank should be drained (see "Replace hydraulic oil").

Remove the tank cover (3) and replace the oil filter.

After replacing the filter, refill the hydraulic oil (see "Replace hydraulic oil").

▶ Replace hydraulic oil and oil filter (CBH 2.5 | CBH 3.0 | CBH 3.5)

- Park the truck on level ground.
- Tilt the mast backward to the end and drop the forks on the ground.
- Apply the parking brake.
- Open the cover, screw off the oil filler cap (1) of the fuel tank and take out the dipstick.
- Put one container under the truck frame, remove oil plug (6), and drain oil.
- Take away the container, dispose waste oil according to local environmental law, and do not dump at will.
- Unscrew eight bolts (2).
- Remove the oil tank cover (3) and the gasket (4).
- Remove the oil filter (5) and install a new one.
- Install the cover (3) in reverse order of removal.
- Screw back the drain plug (6), add new hydraulic oil and check for leakage.
- Put the cap (1) back on.
- Start forklift, raise forks for 3-5 times, and tilt the mast forward or backward for 3-5 times.
- Add oil to specified scale.

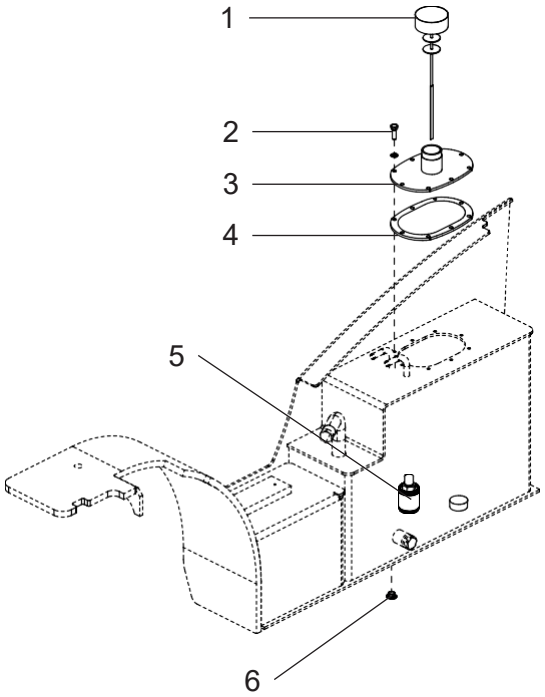

▶ Check the electrical fuses

- Prepare the truck for maintenance and repairs in accordance with the relevant safety procedures.
- Open the battery hood.
- Visually inspect fusible links for signs of damage or melting. If uncertain, use a multimeter or test lamp to verify continuity.

NOTE

Verify the fuse rating using the parts manual or service manual before replacement.

⚠ WARNING

- Only replace fuses with ones of identical type and rating.
- If a fuse has blown, this may indicate a short circuit or overcurrent. Identify and correct the root cause before installing a new fuse.
- Do not wrap fusible links with adhesive tape. Fusible links may become hot and must not be placed near rubber components or wiring assemblies

▶ Fork Inspection

Inspect the load forks for bending and wear:

- The top surfaces of the forks should be level with each other.
- If the height difference between the fork tips is greater than 1.5% of the blade length (A), then the forks must be replaced.
- If the fork heel is worn by more than 10% of the thickness (B) of the fork blade, then the forks must be replaced. The load capacity of the forks is reduced when the forks have experienced excessive wear.

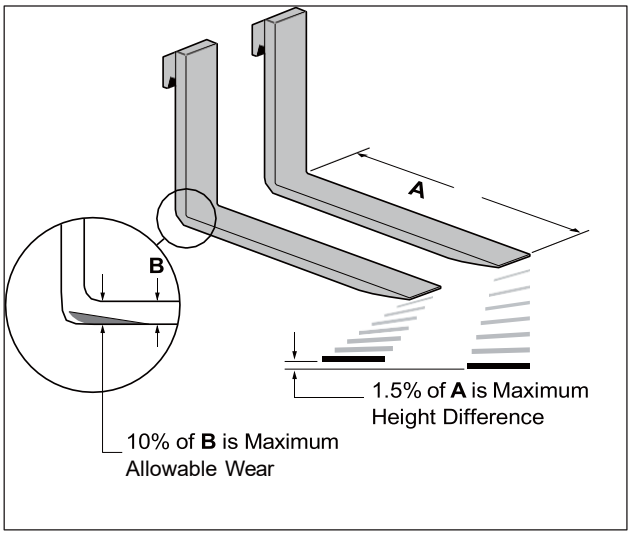

▶ Inspect the forks for twists and bends

- Position a 50 mm thick block, at least 100 mm wide and 600 mm long, on the blade of the fork with the 100 mm surface against the blade.
- Position a 600 mm square on the top of the block and against the shank.
- Check the fork gap at 500 mm above the blade. If the gap distance is greater than 25mm, then the forks must be replaced.

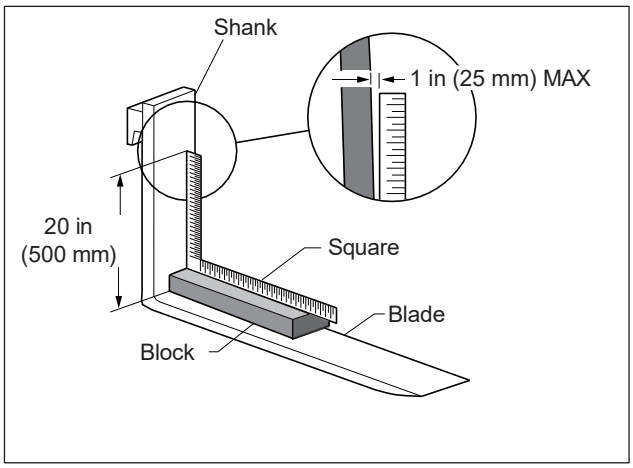

⚠ WARNING

Do not operate a lift truck with bent, damaged, or worn forks.

▶ Lift Chain Inspection and Lubrication

During normal operating conditions, inspect and lubricate the lift chains every 450 to 500 hours. If operating in corrosive or extreme working conditions, inspect more frequently.

When inspecting, check for: rust and corrosion, cracked plates, raised or turned pins, tight joints, excessive wear, and worn pins and holes.

Lift chain lubrication is a crucial step of your planned Maintenance program. The correct and timely lubrication of the lift chains will maximize their service life.

▶ Lift Chain Wear and Replacement Criteria:

The lift chain will gradually stretch over time during normal operation. When a section of chain has stretched 3% or more, it is considered excessively worn and must be replaced. When checking for chain stretch, always measure a segment of chain that moves over a sheave.

- New Chain Length (A): distance from the first pin counted to the last pin counted in a span while the chains are lifting a small load.
- Worn Chain Length (B): distance from the first pin counted to the last pin counted in a span while the chains are lifting a small load.
- Span (C): number of pins in the segment of chain to be measured.
- Pitch (D): distance from the center of one pin to the center of the next pin.

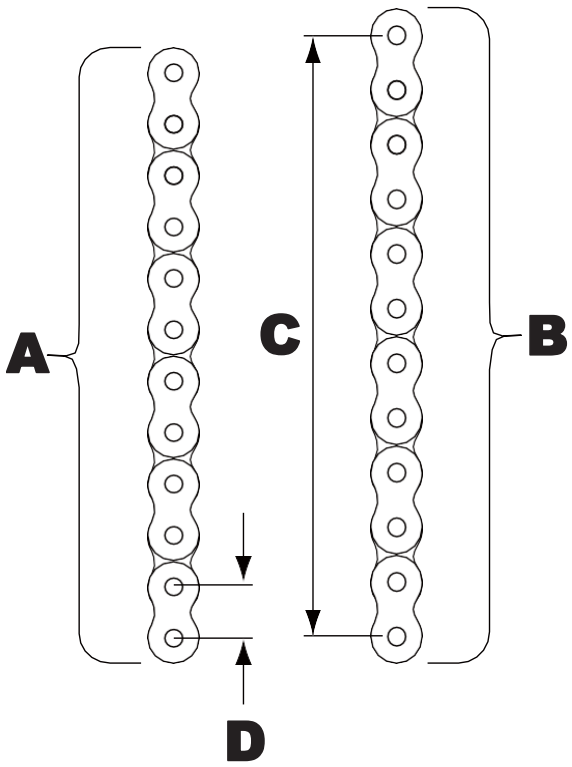

⚠ WARNING

Do not attempt to repair a worn or broken lift chain.

5.5.1 Servicing wheels and tyres

► **Steer Wheels Removal and Installation**

Removal

- Switch off the truck and secure it against unintended movement.
- Lift the truck using suitable lifting equipment (1) until the steer wheels are off the ground.
- Place a wooden block under the chassis near the steer wheel to stabilize the wheel.
- Loosen and remove the eight lock nuts (2) on the steer axle assembly (3).
- Remove the steer wheels (4)

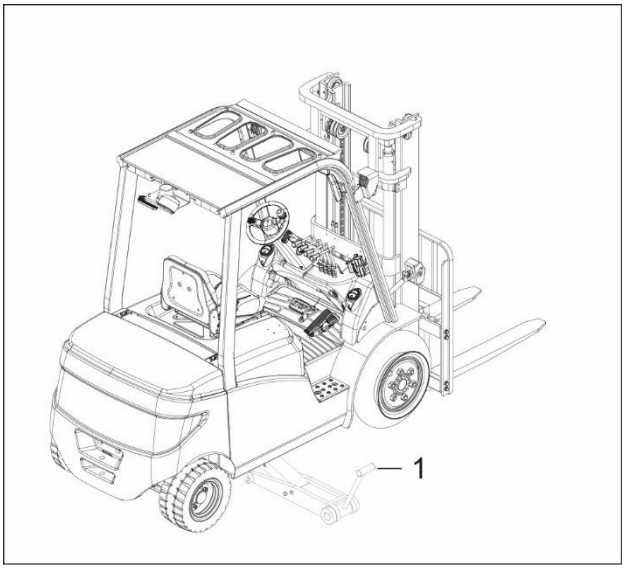

Installation and Commissioning

- Install in reverse order of removal.
- Mount the new wheel on the hub and tighten the hub nuts evenly in a crosswise pattern.

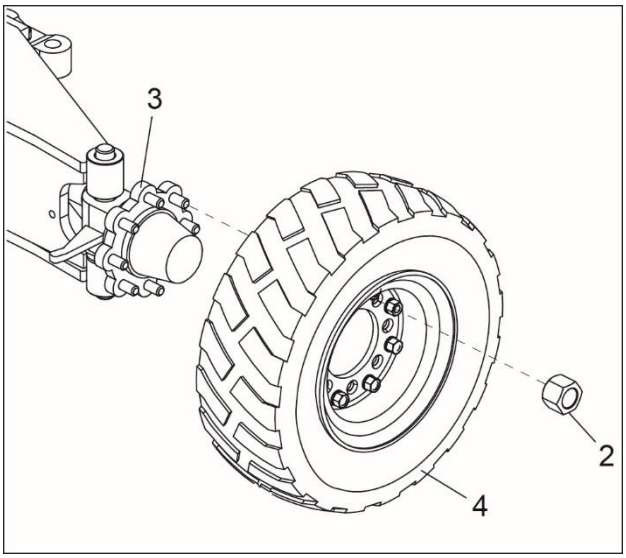

▶ Drive Wheels Removal and Installation

- Switch off the truck and prevent unintended movement.
- Raise the vehicle with suitable lifting equipment (1) until the drive wheels are off the ground.
- Position a solid, one-piece wooden block under the chassis near the drive wheel for stabilization.
- Loosen and remove the six lock nuts (2) from the drive axle assembly (4).
- Remove the drive wheels (3).

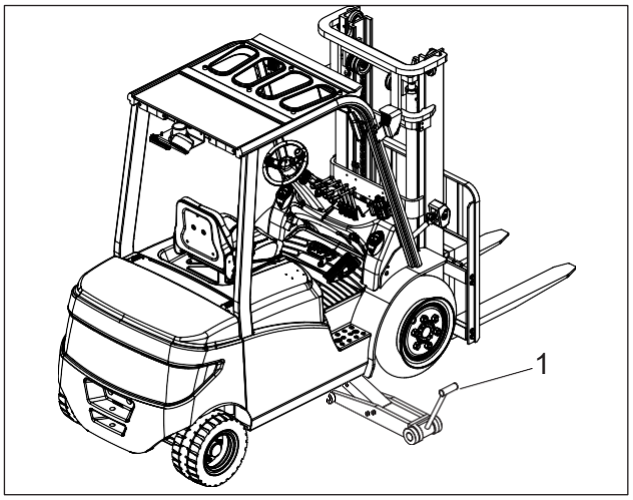

▶ Installation and Commissioning

- Install the new wheels in the reverse order of removal.
- Position the wheel on the hub and tighten the nuts evenly and crosswise.

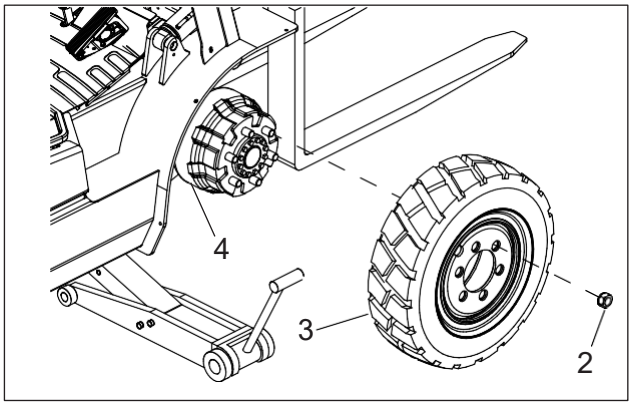

⚠ WARNING

Solid tires are installed. Ensure the truck is stable and cannot tilt during replacement.

⚠ WARNING

Make sure that wooden blocks used to support forklift truck are solid, one-piece units.

Never get under the forklift when the forklift is only supported with wood block

⚠ WARNING

Do not take out wheel nuts before the rear leave the ground.

ⓘ NOTE

Drive wheels must only be replaced by authorized service personnel.

⚠ CAUTION

Quality of tyres directly affects the stability and driving performance of the device.

If you need to replace the factory-fitted tyres, please use original spare parts provided by the equipment manufacturer to reach the original design performance of the truck.

⚠ CAUTION

The nuts must be tightened at least once every 250 operating hours.

▶ CBH 2.0

⚠ CAUTION

- Screw the nuts.
- Tighten the nuts of steer wheels in order and mark with the torque: ***206-243 Nm***.
- Tighten the nuts of driving wheels in order and mark with the torque: ***640- 758 Nm***.
- Turn the wheel to see if it is rotating smoothly, and if there is blocking or not.
- Run the truck to see if the wheels are functioning properly. If there is blocking or noise, please check if the wheel bearings are functioning properly.

▶ CBH 2.5 | CBH 3.0 | CBH 3.5

⚠ CAUTION

- Screw the six nuts.
- Tighten the nuts of steer wheels (2) in order and mark with the torque: ***220 Nm***.
- Tighten the nuts of driving wheels (1) in order and mark with the torque: ***650 Nm***.
- Turn the wheel to see if it is rotating smoothly, and if there is blocking or not.
- Run the truck to see if the wheels are functioning properly. If there is blocking or noise, please check if the wheel bearings are functioning properly.

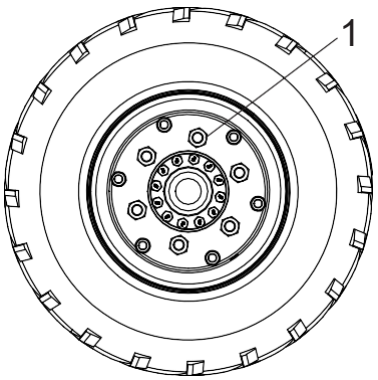

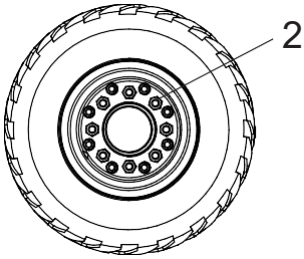

▶ Checking condition and wear of the tyres

Do the following when inspecting the wheels and tires:

- Inspect the tires for wear at intervals not exceeding 1000 operating hours. Replace tires when more than one-third of the original tread is worn.
- Remove embedded foreign objects from the tire surface.
- Check the tires for significant damage, such as deep cuts, cracks, or missing chunks.
- Check that all wheel fasteners are present, undamaged, and properly secured.
- Inspect fasteners for looseness. Tighten any loose or replaced fasteners to the torque values specified in the Service Manual.

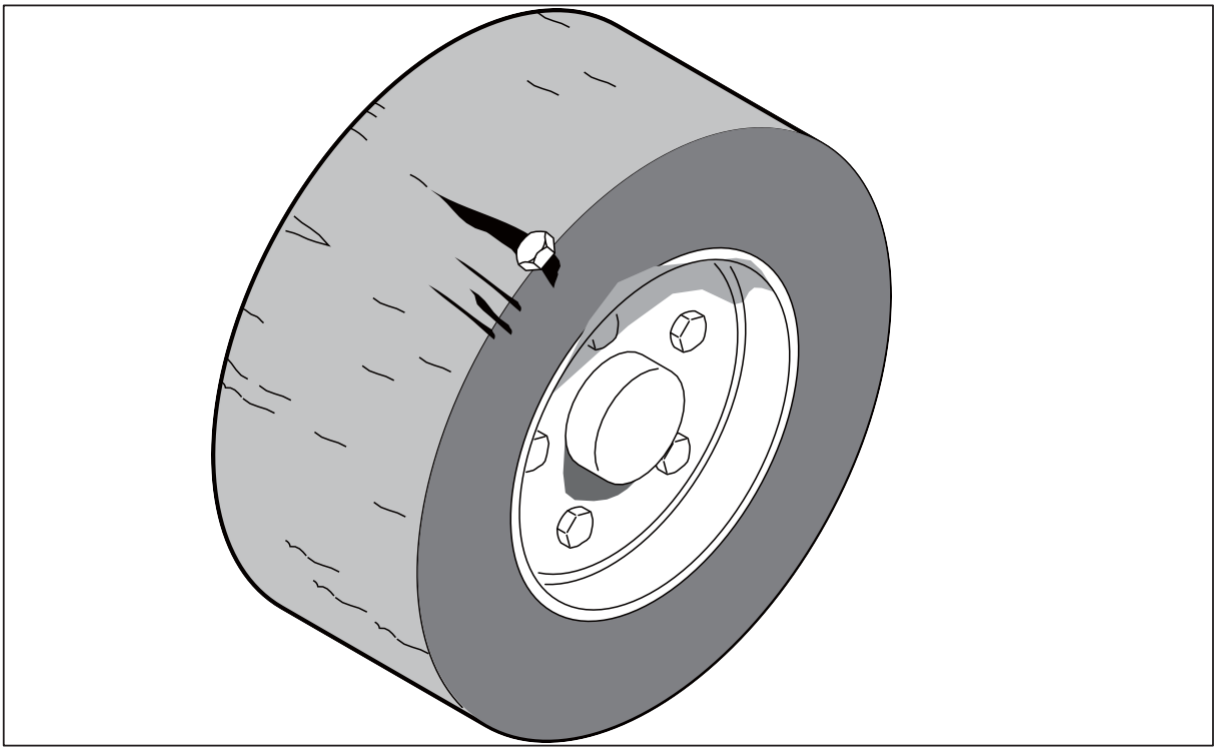

▶ Checking wheel fastenings

– Check that all wheel fastenings are securely fastened and retighten if necessary.

– Observe the relevant torques.

5.5.2 Restoring the truck to service after maintenance and repairs

- Thoroughly clean the truck.
- Visually inspect the battery and check the cable connections for secure fit and damage.
- Recharge the battery.
- Check the hydraulic oil for signs of water contamination and replace it if necessar.
- Follow the daily checklist.

5.6 Decommissioning the trucks

The truck must be parked in a frost-free, clean, dry location and 0-40℃ condition. Parking the forklift in an environment below 0 ° C for a long time is forbidden.

5.6.1 Prior to decommissioning

- Thoroughly clean the truck.
- Raise and lower the fork carriage to its full extent and tilt the mast fully forward and backward multiple times. Repeat this process for any attachments if installed.
- Check the brakes for function and wear.
- Check the hydraulic oil level and refill if necessary.
- Apply a thin layer of lubricating oil or grease to all unpainted mechanical components.
- Lubricate the truck in accordance with the lubrication schedule.
- Recharge the battery every 1 to 2 months.
- Visually inspect the battery and ensure all connections are clean and secure.
- Spray all exposed electrical contacts with a suitable contact spray.

⚠ WARNING

Charge the battery every 1 to 2 months to avoid depletion of the battery through self-discharger.

⚠ CAUTION

Jack up the forklift truck to prevent permanent tyre deformation.

ⓘ NOTE

Do not cover the forklift truck with plastic film as it may gather water vapour.

5.6.2 Daily storage

- Park the forklift in a designated, level area and secure it against rolling by placing wheel chocks.
- Set the travel direction lever to neutral.
- Engage the parking brake.
- Switch off the key switch.
- Operate the hydraulic control levers several times to release residual pressure from the hydraulic system.
- Remove the key and store it in a secure location.
- Pull up the emergency stop button to shut down the electrical system.

5.6.3 Long-term storage

Perform the following tasks in addition to the daily storage procedure:

- Disconnect the battery plug to prevent discharge.
- Store the vehicle in a dry, dark location.
- Apply corrosion protection to shafts, rods, and other exposed metal parts.
- Seal breathers and all openings through which moisture could enter.
- Lubricate moving parts with oil or grease as required.
- Support the underside of the chassis and counterweight with wooden blocks to relieve pressure on the drive wheels.
- Cover the entire vehicle with a protective cover or tarp.

⚠ WARNING

- The wooden blocks must be single pieces that are sturdy enough to support the weight of the forklift.
- Do not use wooden blocks that are more than 300mm (11.81 inches) in height.
- Raise the forklift just enough to allow it to be placed onto the wooden support blocks.
- Place wooden blocks of identical size under left and right sides of the frame.
- After supporting the forklift with the wooden blocks, move the forklift back and forth from all four sides to make sure that it is safely secured.

⚠ WARNING

Only begin recharging when the battery temperature (as shown on the display) is above 5 °C.

5.6.4 Final decommissioning, disposal

Final, proper decommissioning or disposal of the truck must be performed in accordance with the regulations of the country of application. In particular, regulations governing the disposal of batteries, hydraulic oil, plastic and electronic and electrical systems must be observed.

5.7 Restoring the truck after decommissioning

5.7.1 Procedure

- Thoroughly clean the truck.
- Clean the battery and reconnect the battery.
- Recharge the battery.
- Check if the hydraulic oil contains condensed water and change if necessary.
- Follow the daily checklist.

NOTE

If you want to carry out maintenance on the forklift truck yourself, we recommend that maintenance be carried out by technicians appointed by the dealer at least for the first three times. Your maintenance personnel should also be present, in order to receive appropriate training.

6 TROUBLESHOOTING

If an accident or malfunction occurs with the forklift, the following steps should be taken:
Immediately cease operation of the forklift and park it in a safe area.
In the event of an accident, promptly notify relevant personnel such as supervisors, safety officers, or emergency responders.
In case of a malfunction, report the issue according to company protocols and seek repair or maintenance services.
For accidents involving injury, administer first aid promptly and notify medical personnel for assistance. Ensure that no further harm is caused to others while addressing the accident or malfunction. Fill out and submit accident or malfunction reports as per company policies, and follow relevant procedures. After appropriate handling of the accident or malfunction, inspect, repair, and test the forklift as necessary to ensure its safe operation.
This chapter is designed to help the user identify and rectify basic faults or the results of incorrect operation. When locating a fault, proceed in the order shown in the table.
If the fault cannot be rectified or a fault in the electronics system is displayed with a corresponding error code after carrying out the remedial procedure, notify the manufacturer ' s service department ,as any further troubleshooting can only be performed by specially trained and qualified service personnel.The manufacturer has a customer service department specially trained for these tasks.

Fault	Fault Symptom	Troubleshooting Order	Troubleshooting Measures
Power supply failure	1. Whole vehicle power outage	a. Power supply failure b. Fuse failure c. Emergency stop switch or circuit failure d. Key switch or circuit failure	1. Check the voltage of battery 2. Check the fuses 3. Check emergency stop switch and its circuit 4. Check key switch and its circuit
Travel Fault	1. Forward and reverse moving failures of the vehicle, but other functions are normal	a. Parking brake switch and seat switch or its circuit connection failure b. Gearbox failure c. Travel switch or its circuit connection failure d. Drive motor or its circuit connection failure e. Controller failure	Controller failure error, carry out troubleshooting according to the fault code information on the instrument. 1) Check if parking brake switch and seat switch or the connection of its circuit is normal. 2) Check the gearbox. 3) Check the travel switch and its connection circuit. 4) Check the drive motor and its connection circuit. 5) Replace the controller.
	2. The vehicle can travel at low speed, but cannot travel at gh speed	Failures due to external factors: a. Motor bearing blocked b. Gearbox bearing blocked Failures due to internal factors: a. Drive motor speed encoder failure b. Controller failure	Controller failure error, carry out troubleshooting according to the fault code information on the instrument . 1) Check if the motor rotation is normal. 2) Check the speed encoder and its connection circuit. 4) Remove the gearbox, check if the gear rotation is smooth and if there is blocking. 5) Replace the controller

Fault	Fault Symptom	Troubleshooting Order *	Troubleshooting Measures
Hydraulic Failure	1. The vehicle cannot lift	1. Pump motor does not work: a. Parking brake switch and seat switch or its circuit connection failure. b. Pump motor or its circuit connection failure. c. Control switch or its circuit connection failure. d. Controller failure. 2. Pump motor works: a. Overload. b. Insufficient hydraulic oil. c. Hydraulic pipeline leakage. d. Pump motor reverse rotation. e. Cylinder failure (blocked). f. Solenoid valve blocked and cannot reset. g. Valve body failure: excessive wear of gear pump, serious internal leaks, insufficient pressure of relief valve or blocked, check valve blocked	1. Pump motor does not work: 1) Check if seat switch or the connection of its circuit is normal. 2) Check the pump motor and its connection circuit. 3) Check the control button and its connection circuit. 4) Replace the controller. 2. Pump motor works: 1) Refer to the rated capacity marked on the dataplate. 2) Lower the mast to the bottom, check if the amount of oil in the oil tank can meet the requirements. 3) Check the pipe and hydraulic components for oil leaks. 4) Check the pump motor wiring. 5) Check the cylinder for damage or deformation, remove the cylinder to check for wear or aged seals inside. 6) Wash or replace the solenoid spool. 7) Wash or replace the valve body
	2. The vehicle cannot be lowered	a. Solenoid valve (or manual valve) or its circuit connection failure b. Lowering switch or its circuit connection failure c. Valve failure. d. Cylinder deformation or blocked e. Hose rupture valve blocked	1) Check the lowering button and its connection circuit. 2) Check the solenoid valve and its connection circuit. 3) Check the cylinder for deformation, remove the cylinder to check if the internal assembly is normal 4) Clean or replace the valve. 5) Replace the explosion-proof valve.

Fault	Fault Symptom	Troubleshooting Order *	Troubleshooting Measures
Lift Failure	3. Slow Lifting of Vehicle	a. Overload b. Hydraulic pipeline leakage c. Valve failure: Gear pump wear, internal leakage occurs Insufficient relief valve pressure or blocked	1) Refer to the rated capacity marked on the dataplate. 2) Check the pipe and hydraulic components for oil leaks. 3) Wash or replace the valve body
	4. Slow Lowering of Vehicle	a. Solenoid valve blocking b. Valve body failure: throttle valve failure or blocked	1) Wash or replace the solenoid spool 2) Wash or replace the valve body
	5. Unstable Lifting / Lowering of Vehicle	a. Chain loosening. b. Poor lubrication between steel channel and rollers. c. Improper adjustment of rollers, or blocked.	1) Adjust the chain tension. 2) Check if the steel channel grease is normal, clean and re-lubricate steel channel and rollers. 3) Adjust the side roller spacing through roller screw. or replace the roller.
* Under the circumstances of normal lifting and lowering, if failure occurs to any of other hydraulic actions (forward/backward shifting, forward/backward tilting and left/right shifting), perform troubleshooting to the corresponding control switch and its control circuit.			
Steering Fault	1. The vehicle cannot be steered (the vehicle can travel)	a. Steering bridge or the tubings connection failure b. Pump motor failure c. Gear pump failure d. Pump controller failure	Controller failure error, carry out troubleshooting according to the fault code information on the instrument. 1) Check the redirector or the tubings connection. 2) Check the steering bridge or the tubings connection. 3) Check the pump motor or its connection circuit. 4) Check the pump. 5) Replace the controller.

Fault	Fault Symptom	Troubleshooting Order	Troubleshooting Measures
Other Failures	1. Lights do not light	a. Light failure or circuit not conducted b. Lighting combination switch or its circuit connection failure c. Fuse failure	1) Check the light and its circuit connection. 2) Check Lighting combination switch and its connection circuit. 3) Check fuse and its connection circuit.
	2. Horn does not sound	a. Horn switch or its circuit connection failure b. Horn failure c. Fuse failure	1) Check the horn button and its connection circuit. 2) Check the horn and its connection circuit. 3) Check fuse and its connection circuit.

Carry out troubleshooting in accordance with the order listed in the table, it can help you quickly identify problems and resolve accordingly.

To provide targeted and rapid response to faults, the following details are useful and important to provide for the customer service department:

- Truck serial number
- Display unit error number (if present)
- Error description
- Current location of truck.

7 Lithium battery

7.1 Lithium battery use and maintenance

The manufacturer and supplier of the lithium-ion battery declare that the battery complies with the relevant requirements of the following directives

- Directive 2014/30/EU (EMC Directive) in accordance with EN 12895
- Directive 2014/35/EU (Low Voltage Directive) for batteries with a nominal voltage above 50 V AC or 75 V DC

This declaration of conformity with EU directives is valid only if the battery is used in accordance with the operating instructions and under the specified conditions.

7.2 Special lithium-ion safety rules

⚠DANGER

There is a risk of fire.

Use water-based extinguishers, CO2, dry chemical fire extinguishers.

⚠DANGER

- Electrical danger
- Do not open the battery. Electrical risk.
- Only the After-Sales Service Centre technicians can open the battery.

► **It is necessary to respect the following guidelines:**

Read the documents provided with the battery carefully.

Only persons who have been trained to work with lithium-ion technology are permitted to work on the batteries (for example After-Sales Service Centre technicians).

Do not place lithium-ion batteries on or near flames or hot heat sources (> 65°C). This may cause the batteries to overheat or burst into flames. This type of use also impairs the performance of the batteries and reduces their service life.

Improper use may cause overheating or serious injury. Respect the following safety rules:

- Never short circuit the battery terminals
- Do not reverse the battery polarity
- Do not open the battery
- Do not submit the battery to excessive mechanical constraints

7.2.1 Intended use

- Recommended operating temperature: 0 °C - 40 °C; humidity ＜ 80%.
- Charging application temperature 5°C-40° C.
- The battery's maximum operation altitude is up to 2000m.
- Do not disconnect the battery for emergency stopping, use instead the emergency switch.
- The truck shall not be used in a potentially explosive atmosphere or in an especially dusty environment.

7.2.2 Reasonably foreseeable misuse

- Never short circuit the battery terminals.
- Do not reverse the battery polarity.
- Do not overcharge.

7.2.3 Accessories

Do not use a charger that is not released by the manufacturer for lithium-ion battery.

7.2.4 BMS (Battery Management System)

- The battery management system (BMS) for a lithium-ion battery is crucial for the safety and performance of the system. Here are the most important features and functions:
- Current, voltage and temperature monitoring: the BMS continuously monitors the charging current, battery voltage and temperature of the cells, as well as the individual modules, during the charging and operating cycle.
- Differentiation for cells and modules: The BMS can differentiate between the individual cells and modules and monitor and control individual parameters for each cell or module to ensure even utilization and optimum performance.
- Safety shutdown: If safety limits are exceeded, such as critical temperatures, currents or voltages, the BMS safely shuts down the system to prevent damage to the battery and ensure safety.
- Output of error codes with corresponding action: The BMS recognizes errors and outputs corresponding error codes. Depending on the severity of the fault, the BMS can take measures such as issuing warning messages or switching off the system.
- Permanent communication with the vehicle's CAN bus: The BMS communicates continuously with the vehicle's Controller Area Network (CAN) bus to exchange important data and ensure that the BMS and other vehicle systems work in a coordinated manner.

7.2.5 Battery usage guidelines and manufacturer compliance

The use of batteries must strictly follow the manufacturer's instructions. Any modification to lithium batteries or their safety devices is strictly prohibited unless prior written approval is obtained from our company. Only original spare parts ensure compliance with the manufacturer's quality management standards. Our company shall not be liable for any vehicle malfunctions or accidents caused by the use of non-original spare parts. For more details, please refer to the lithium battery warranty agreement and relevant contract terms.

7.3 Warning indications

Always follow the operating instructions and keep them in a clearly visible location near the battery charger.
If any defects or irregularities are detected on the lithium-ion battery, immediately remove it from service and contact the battery manufacturer's customer service.

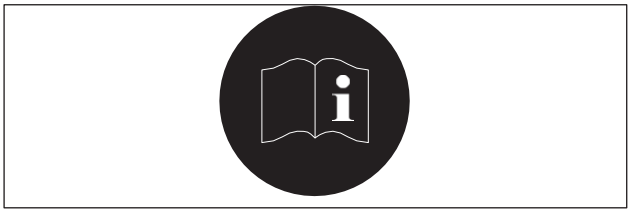

Always wear appropriate personal protective equipment (e.g. safety goggles and protective gloves) when handling batteries or battery cells.

- Do not smoke or use open flames in the vicinity of the battery.

- Keep the battery away from hot surfaces, sources of ignition, sparks, or flammable and explosive materials.
- Keep the battery away from all fire sources, heat sources and flammable or explosive materials!

Do not step or climb on the battery. This may cause severe vibrations or damage to internal components.

- Avoid connecting or disconnecting the battery under load (hot plugging).
- Danger – high voltage!
  The metal parts of the battery cell may carry voltage.

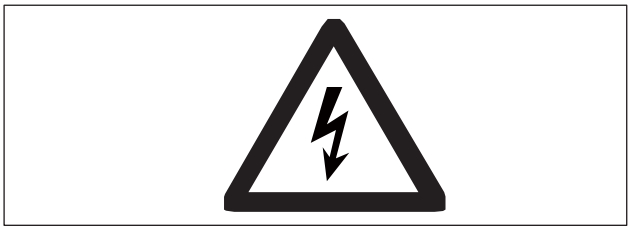

- Do not place objects or tools on the battery.

- Avoid tipping or knocking over the battery.
- Use only approved lifting equipment. Protect the battery housing, connectors, and cables from mechanical damage!
- In case of leakage:

  Avoid inhalation of vapors.
  Wear suitable safety gloves.
- Always wash your hands thoroughly after handling the battery.
- Use only insulated tools when working on the battery.

- Keep the battery away from direct sunlight and all other heat sources.
- Do not expose the battery to heat or open flames

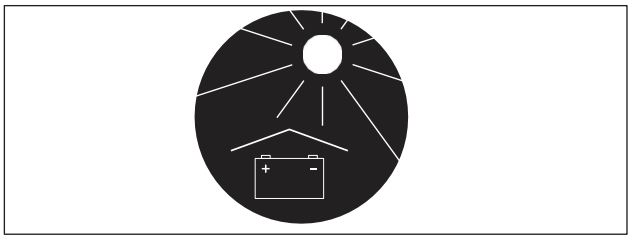

- If the battery is physically damaged, electrolyte may leak. Electrolyte is hazardous and must not come into contact with skin or eyes.

- Do not modify, deform, puncture, crush, compress, or physically alter the battery in any way.
- Never open, bend, or penetrate the battery. Do not heat it, immerse it in liquids, place it in a fire, or cause a short circuit.
- Do not drop the battery or expose it to mechanical impact.
  Do not store or operate the battery in unsuitable environments such as enclosed heating systems or pressurized chambers.

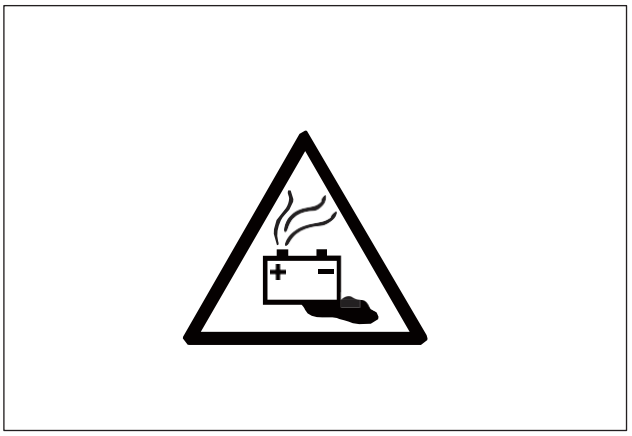

7.3.1 Labelling for lithium-ion battery maintenance instructions

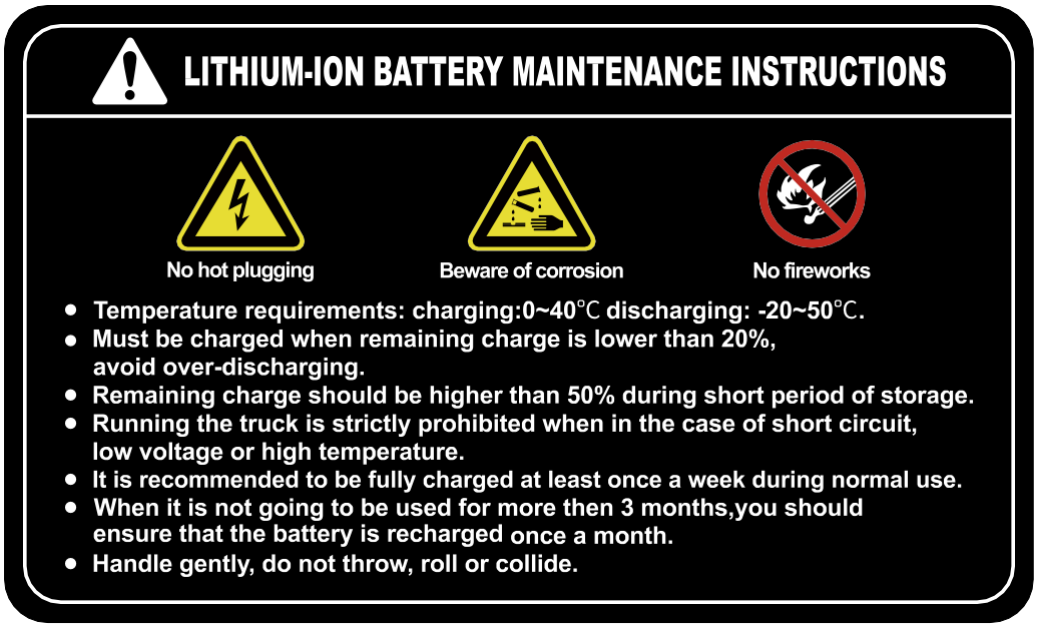

7.4 Potential hazards

- No hazards are anticipated if the equipment is used correctly.
- Do not use the equipment for anything other than its intended purpose.
- The following hazards can arise in the event of improper use.

7.4.1 Physical damage:

This can occur if a battery falls or is deformed through pressure (e.g. truck forks penetrate the battery housing).

Mechanical damage includes cracks, breakage, splinters or holes in the battery housing. This type of damage may be caused by a short circuit inside the battery, which may result in harmful materials leaking, fire or battery explosion.

7.4.2 Short circuits:

These may be caused by connecting the two battery terminals (e.g. battery immersed in water)

7.4.3 Temperature effects

Exposing the battery to hot temperatures (e.g. direct sunlight or storage near heat sources) can cause leakage of hazardous substances, fire, or explosion.

To minimize the risk of fire or the release of harmful substances, store the battery in a location that meets the following requirements:

- Do not store the battery in areas with frequent personnel access.
- Do not store the battery near valuable equipment or vehicles (e.g. cars).
- Ensure a suitable fire extinguisher is available nearby.
- Fire or smoke detectors near battery storage areas must be suitable for use in environments with possible harmless emissions, in order to avoid false alarms.
- Minor emissions from a single battery do not typically pose an environmental hazard. Ensure adequate natural ventilation is available.
- Do not store the battery near ventilation intake ducts, as any released substances may spread into the building.

7.4.4 Examples of where to store a non-functional battery

- Roofed outdoor position.
- Ventilated container.
- Covered box with pressure and smoke discharge option.

7.4.5 Fire hazard

⚠ WARNING

Physical damage, thermal effects or incorrect storage in the event of a defect can result in fire.

Since the extinguishing of burning lithium-ion battery systems with suitable extinguishing agents extinguishing agents, the responsible fire brigade should be informed in advance or the company fire. Fire protection assistants should be trained accordingly.

ⓘ NOTE

A suitable method is cooling down with water. Accordingly, the parking area and charging stations should be equipped with extinguishing facilities.

⚠ DANGER

There is a risk of fire.

Use water-based extinguishers, CO2, dry chemical fire extinguishers.

7.4.6 Material discharge

► **Battery electrolyte fluid can be hazardous**

Electrolyte fluid can be discharged if the battery is physically damaged. Electrolyte fluid is harmful and must not come into contact with the skin or eyes.

If it does, rinse the affected parts with plenty of water and seek medical assistance immediately.

In the event of skin irritation or if any substances are breathed in, seek medical assistance immediately.

In the event of inhalation bring the affected person into the fresh air and keep them still.

► **Precautionary measures for personnel**

- Keep personnel away and facing the wind.
- Block off the affected area.
- Ensure there is adequate ventilation.
- Wear personal protective equipment.
- If vapours / dust / aerosols are present, use self-contained breathing apparatus.

► **Precautionary measures for the environment**

Do not allow spilled fluids to enter the water system, drainage system or the underground water.

► **Cleaning measures**

The leaked fluid must be removed professionally by the operating company on the basis of a risk assessment and disposed of in the correct manner. The fire brigade, the Agency for Technical Relief or similar institutions must be used. Absorb residues with liquid-absorbent material (such as vermiculite, sand, universal binders and pebble grain).

7.5 Touch voltage hazard

⚠ WARNING

Touch voltage hazard!

Hazardous touch voltages may occur in the event of a technical or mechanical defect on the battery. Touch voltages also occur on seemingly discharged batteries.

Touching the battery terminals or live attachments (battery cable, battery connector etc.) can result in dangerous current flows through the body. There is a risk of serious, irreversible or fatal injuries.

- Tag out the faulty battery and take out of service.
- Do not touch faulty batteries
- Do not place any objects or tools on the lithium-ion battery to avoid short-circuiting the battery.
- Do not short-circuit the lithium-ion battery.
- Notify the customer service department.

7.6 Battery featuring circular meter

No.	Name	Description
1	Energy display	When all 10 bars are on, it indicates that the battery is full. When the first cell and the second flash alternately, it indicates that the battery is low and must be charged. The battery remaining charge is displayed. “100%” indicates that the battery is fully charged.
2	Total voltage	The sum of the total voltages of the lithium battery series (normal voltage rang of total voltages of the battery2.5~3.65V*15 for 48V 2.5~3.65V*24 for 80V)
3	Temperature	Battery temperature
4	Charging current	Current value when charging the lithium battery
5	Maximum cell voltage	Maximum value of cell voltage, (normal voltage rang of the cells of the battery2.5~3.65V)
6	No. of cell	Identification No. of the cell with maximum voltage.
7	Minimum cell voltage	Minimum value of cell voltage (normal voltage rang of the cells of the battery2.5~3.65V)
8	Cell No. of minimum cell voltage	Identification No. of the cell with minimum voltage.
9	Fault code	If the battery fails, a fault code will be displayed

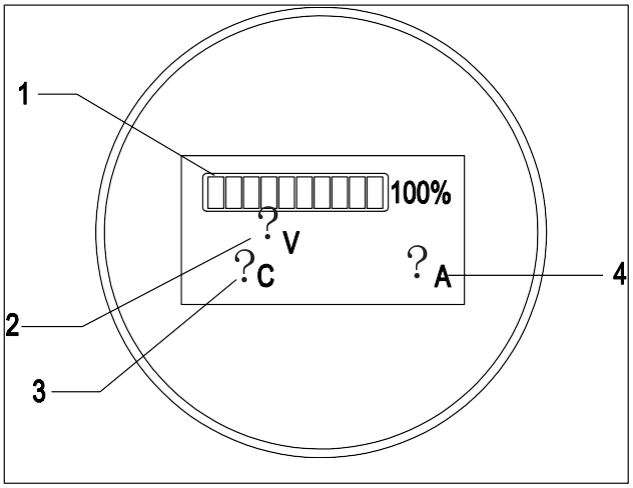

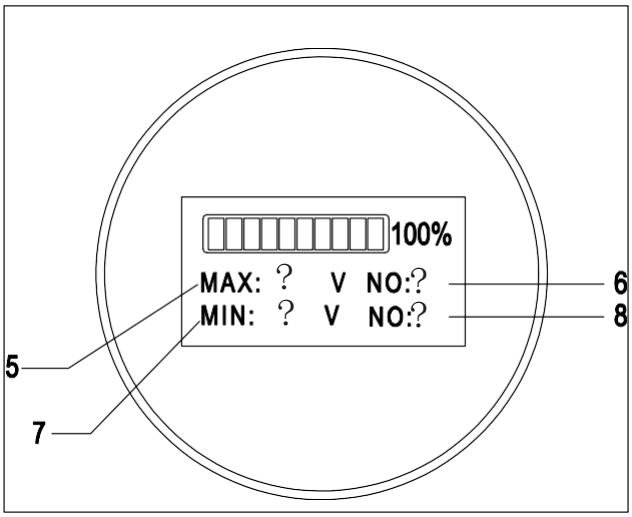

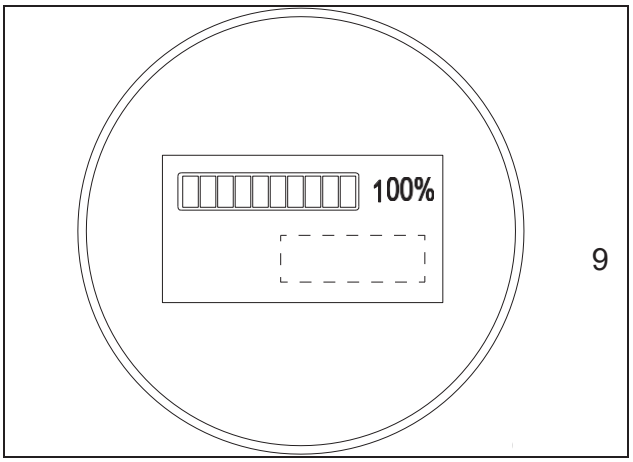

7.7 Battery Data plate

NOTE

The label position is subject to the actual lithium-ion battery.

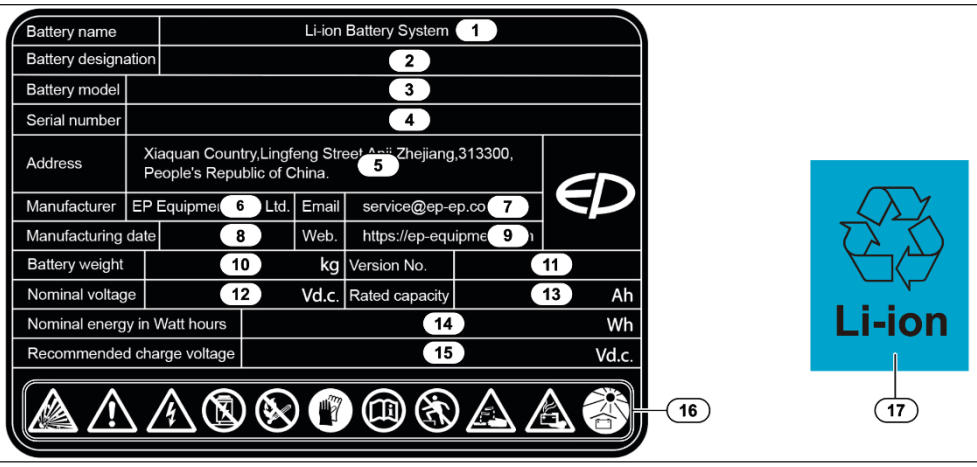

Item	Description
1	Battery name
2	Battery designation
3	Battery model
4	Serial number
5	Manufacturer - Address
6	Manufacturer
7	Manufacturer - E-mail
8	Manufacturing date
9	Manufacturer - Website
10	Battery weight
11	Version number
12	Nominal voltage
13	Rated capacity
14	Nominal energy in Watt hours
15	Recommended charge voltage
16	Warning Indications, see page 125
17	Recycle sign, see page 138

NOTE

The JH battery label (18) is only present in countries of the European Union.

7.8 Information on the conformity of lithium-ion batteries

1) Regulation (EU) 2023/1542 in Articles 6, 10 and 13.
2) Directive 2011/65/EU including amendment (EU)2015/863 in the latest valid version.
3) Directive 2014/35/EU (Low Voltage Directive) for batteries with a nominal voltage above 50 V AC or 75 V DC
4) EMC Directive 2014/30/EU in the latest valid version in the harmonised standards EN 12895:2015+A1:2019, EN IEC 61000-6-2:2019 and EN IEC 61000-6-4:2019.
5) The harmonised standard EN 62619 in the latest valid version and to the harmonised standard EN 1175:2020 Annex C.2 as energy sources for industrial trucks.
6) If a radio system is installed, we declare that it complies with the RED Directive 2014/53/EU.

7.9 Lithium-ion battery routine inspection

⚠ CAUTION

The following items should be checked every day.

Daily inspection items	Troubleshooting
Liquid leakage and corrosion at the charging	Stop using the battery and handle in accordance with the chapter “7.12 Hazard of faulty or discarded battery and recycle”.
Signs of liquid leakage at the bottom of the battery	
Case broken	
Swollen battery	
Connector pins burnt,deformation,ablation	Contact your authorised dealer to replace the contacts or Connector pins should be performed by a certified technician

7.10 Instructions on faulty batteries inspection

⚠ DANGER

Faulty batteries may cause short circuits and lead to fires. To eliminate potential safety hazards and avoid unnecessary economic losses and other consequences, daily inspection is required, please act in strict accordance with the guidelines.

7.11 Checking batteries for signs of malfunction

- Whether there is any leakage between the communication terminal and charging/discharging pins at the bottom of the battery, and in the gaps around the pins.
- Check whether there are pungent smells.
- Check the middle connection of the body for swelling of the housing or internal cells abnormal expansion, bulge
- Check whether there are crack or damage
- Check the battery for signs of impact and damage.

7.12 Hazard of faulty or discarded battery and recycle

Monitor the battery condition regularly during operation and storage. In case of damage, such as:

- Visible deformation or cracks
- Electrolyte leakage
- Abnormal swelling, odor, noise, heat generation or vibration

Immediately take the battery out of service and establish a safety perimeter of at least 5 meters. Store the affected battery in a designated, clearly marked area and contact a qualified recycling provider.

If the battery is under warranty, submit a claim together with a photo of the battery's data plate.

Until final disposal, observe the following safety measures:

- Temporary storage of damaged batteries:

  Place the battery in a leak-proof and fire-resistant container. If required, the container can be filled with water to reduce reaction activity. Slight smoke emissions may occur as a result of energy dissipation – this is a known chemical reaction.

- General safety instructions

  Always store the container and battery at least 5 meters away from flammable materials or buildings.

  Appropriate personal protective equipment (e.g. gloves) when handling batteries.

  Do not stack damaged or used batteries.

  Ensure the storage area is outdoors or in a well-ventilated space, protected from direct sunlight and equipped with fire extinguishing equipment.

- Larger battery modules

  For large-format batteries with internal/external enclosures, follow the same storage precautions. Contact a qualified recycling partner and do not delay disposal.

7.13 Charging

When charging, make sure the battery charger is turned OFF before connecting the battery charging cables. Lithium-ion batteries allow for fast charging, if the battery does not charge completely in a normal period or if the battery management system (BMS) indicates a fault, then remove the battery from service. Manufacturer recommends to opportunity charge lithium-ion batteries.
This is when the battery is recharged for short intervals during a shift period. It reduces or eliminates the need for long charging periods, changing batteries during a shift, and extending shift periods.
The positioning of chargers offers new possibilities compared to lead-acid batteries. For instance, they can be placed in parking spaces near break rooms. Furthermore, there is no hydrogen outgassing during the charging and discharging process, which contrasts with lead-acid batteries. During the charging and discharging process, no technical measures are needed for ventilation or air circulation due to the absence of hydrogen outgassing with lithium-ion batteries.

However, fire protection regulations remain consistent with those for lead-acid battery chargers, requiring a minimum distance of 2.5 meters from combustible materials.

NOTE

The workplace regulations must be observed (emergency exits, escape routes, traffic routes, ... must be kept clear).

CAUTION

- No metal objects should be placed on the battery.
- Be careful of short-circuiting the battery!
- No modification of the lithium-ion battery connector.
- Do not use irregular charging sockets.
- The necessary extinguisher (yellow sand and powder fire extinguisher) should be equipped around the charger so that emergency extinguishing can be carried out under extreme conditions.
- Do not modify or disassemble the charging port and charging equipment, which may result in *charging failure and fire.*
- After the charging is finished, do not disconnect the charging device when it is wet or *standing in the water, as this may cause electric shock and cause personal injury*
- To avoid damage to charger cord plug and receptacle, do not pull on charger cord plug. Do not twist, rock or bend plug sideways. Do not use if plug or receptacle is damaged. Loose or feels hot otherwise fire, property damage or personal injury may result.
- Connect only properly grounded AC outlet. Do not touch any uninsulated parts of the output connector or battery terminals. Never try to change a frozen battery. There's the danger of explosion!
- An RCD switch (residual current device, circuit breaker) of type B or B+ must be used where necessary.

Maintenance and repair must only be carried out by a qualified specialist who is familiar with the dangers involved and aware of relevance regulations.

7.14 Storage

Try to ensure that the battery or battery pack's power is ≥50% before long-term storage as the battery has the function of self-discharge, be sure to charge the battery once every 1 to 2 months to ensure the battery power is ≥50%.

The battery should be stored in a temperature environment of 0°C~40°C.

The battery in a dry, ventilated and cool environment, avoid direct sunlight, high temperature, high humidity, corrosive gas, severe vibration, etc.

DO NOT stack, stacking of the batteries is not allowed.

Disconnect the batteries from other electrical items before storage, it is prohibited to have any form of discharge behavior during storing.

If the battery is found to be bulged, cracked, or has a low voltage value after long-term storage, the battery may be damaged. please contact the relevant technical department of the company for technical support.

After not using the battery for a long time, do not charge or discharge the battery if the smell of leakage is found near the battery.

⚠ WARNING

- Do not store used batteries for a long time.
- No load bearing, squeezing and contact stacking when storing batteries.
- Do not place batteries near cargo warehouses or near flammable and explosive dangerous *goods.*

7.15 Transportation

Before transporting any lithium-ion battery, check the current regulations on the transport of dangerous goods. Comply with these when preparing the packaging and transport. Train authorised staff to dispatch lithium-ion batteries.

NOTE

It is recommended that the original packaging is kept for any subsequent dispatch.

A lithium-ion battery is a special product.

Special precautions should be taken when:

Transporting a truck packed with Equipment or Lithium batteries contained in Equipment

- Transporting only the lithium battery.
- A class 9 danger label must be affixed to the packaging for transport.

It is different if the battery is transported on its own or in a truck. An example of a label appears in this supplement (see figure below). Refer to the latest current regulations before dispatch as the information might have changed since this supplement was written.

Special documents must be sent with the battery. Refer to the applicable standards or regulations. The applicable IATA, ADR and IMDG regulations must be observed during transport.

For UN3480	Lithium-ion Batteries	Fig0000-00080OM
For UN3481	Lithium-ion Batteries packed with Equipment or Lithium batteries built into Equipment	

⚠ WARNING

Do not pack higher than 1.2 m above the floor of the container and secure properly.

NOTE

"Overpack" is the name for the outer packaging of the dangerous goods.

NOTE

Recharge the lithium-ion battery before transporting it taking account of the transport mode (sea, road, air). Excessive discharge on arrival could damage the performance of the battery.

7.15.1 Shipping faulty batteries

To transport these faulty lithium-ion batteries, contact the manufacturer's customer service department. Faulty lithium-ion batteries must not be transported independently.

7.16 Instructions for disposal

- Lithium ion batteries must be disposed of in accordance with the relevant environmental protection regulations.
- Used cells and batteries are recyclable economic goods. In accordance with the mark showing a crossed rubbish bin, these batteries may not be disposed of as domestic waste. Return and / or recycling must be ensured as required by the Batteries Legislation.
- The method of battery recovery and reuse can be discussed with our company.
- We reserve the right to change the technology.

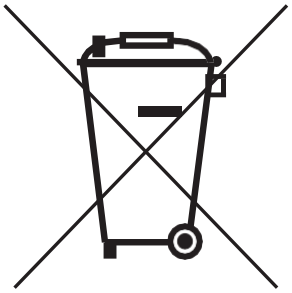

► The requirements of recycling

- Only authorized dealers who have attended the after sales training, are authorized to do repairs on batteries.
- All Li-ion battery should be placed in safe place according to the Li-ion battery Manual.
- The transport of Li-ion battery must meet local regulation, the manufacturer will supply UN38.3 and MSDS files according with UN and ADR regulation.
- The package of Li-ion battery before delivery must meet the UN 3480 or local carrier regulation.

Used cells and batteries are recyclable economic goods. In accordance with the mark showing a crossed rubbish bin, these batteries may not be disposed of as domestic waste. Return and / or recycling must be ensured as required by the Batteries Act (Act regarding the commissioning, return and environmentally responsible disposal of batteries and accumulators). For battery disposal please contact the manufacturer's customer service department.

7.17 Common Problems and Solutions

During the use and maintenance of the lithium-ion battery, the battery or battery system may have one or more of the following abnormal conditions, please organize the professional engineers and technicians to perform the necessary processing according to the instructions in this manual. if you have any questions about the status or solutions, please contact your dealer or after-sales service department of the company to obtain professional technical support.

If the battery is found to have abnormal mechanical characteristics such as swelling, cracked casing, melted casing deformation, and distortion of the casing before and during installation, stop using the battery immediately and store it separately.

If abnormalities such as looseness, cracks, in the insulation layer, burn marks, etc. of the battery's pole pressing bolts, conductive strips, main circuit wires and connectors are found before and during the installation, stop using the battery immediately, check the reason for analysis and give it a fix.

If the polarity of the positive and negative terminals of the battery is found not match the polarity identification before installation, please stop using the battery immediately and contact the after-sales service department to replace the battery or obtain other solutions.

If the temperature of the battery exceeds65°C before and during installation, stop using the battery immediately and leave it separately, if the temperature continues to rise, it needs to be buried with sand.

If there is fire or smoke happens to the battery, move it to the open air immediately, evacuate people in time and contact a recycling company to recycle the batteries.

7.18 Service

7.18.1 Cleaning

The manufacturer recommends to only use compressed air at less than 207 kPa (30 psi) or a slightly damp towel to clean the battery. The battery, or its charging station, may be equipped with fans, heat sinks, or other cooling devices that require periodic cleaning. Always know and follow the battery manufacturer's recommendations for cleaning and service.

7.18.2 Optimize Battery Life

Always use and follow the battery management system (BMS). The BMS is the electronic system that monitors battery data and use that data to its operating environment to influence the battery's safety, performance, and service life. It also functions as a safety cut-off device in case of overcharging, overcurrent, or overheating. Lithium-ion battery life is greatly reduced if used outside a temperature range of 0ºC to 40ºC (32ºF to 104ºF) or in an environment with greater than 85% humidity. The manufacturer recommends to opportunity charge lithium-ion batteries.

This is when the battery is recharged for short intervals during a shift period. It reduces or eliminates the need for long charging periods, changing batteries during a shift, and extending shift periods.

7.18.3 Maintenance table

No.	Maintenance content	Method of operation	Note	Frequency
1	Check if battery capacity is too low	Check instrumentation SOC display	Make sure the battery is not stored without charge for a long time. If the battery system needs to be put on hold for a long time, it is best to keep the battery in half power state and charge the battery every 3 months to ensure that the battery system is in half power state.	Everyday
2	The battery pack charge and discharge current	Check instrumentation display	make sure battery pack charge and discharge current meet with operation manual	Everyday
3	Connector pins at the bottom of the battery(if necessary)	Perform a visual inspection	If any ablation or deformation occurs in daily inspection, the battery connector pins should be replaced in time.	Everyday
4	Check whether the appearance is deformed, whether the surface is oxidized, paint removing, the mounting position is offset, and the cabinet is damaged.	Perform a visual inspection	check the reason for analysis and give it a fix	Everyday
5	Check the entire battery as well as the surface beneath it for signs of fluid leakage.	Perform a visual inspection	check the reason for analysis and give it a fix	Everyday
6	Clean the lithium battery and charger with a dry cloth or compressed air.	Perform a visual inspection, Wear insulated gloves and shake it gently	Make sure it tight	weekly

No.	Maintenance content	Method of operation	Note	Frequency
7	Whether the external wiring harness has worn, imprint, creases and exposed line core	Perform a visual inspection	Make the wiring harness fixed well	weekly
8	Check that the surface of lithium-ion battery looks clean	No dust, no water, no corrosion, oxidation, rust, etc.	Clean surface if you found dust, corrosion, oxidation, rust by using dustless cloth or air compressor ,water battery is strictly prohibited to use	weekly
9	Check that the outside screws of the battery are fastened	Torque wrench correction requires no loosening	Reinforce screws	weekly
10	Check for water or foreign matter in the plug and socket and check for rust or charring(if necessary)	Perform a visual inspection	check the reason for analysis and give it a fix	Monthly
11	Check the cable for damage and loose joints (if necessary)	Perform a visual inspection	check the reason for analysis and give it a fix	Monthly
12	Check the battery case for abnormalities such as cracks, deformation, and bulging.	Perform a visual inspection	check the reason for analysis and give it a fix	Monthly

NOTE

The instrumentation is used for serviced.

ZL80230-43
(80 V | 230 Ah)

Lithium-ion battery

Operation Manual

V1-10/25
(en-GB)

Foreword

Thank you for buying our products.

The manual will show you the way of correctly using the battery as well as relevant preventive maintenance and safety operation. The battery should be operated only by well-trained professionals and by no means by non-working personnel. Operators are supposed to read through the manual before actually operating the battery.

➢ Explanations on the manual

With the continuous upgradation and improvement of our company's products, you may find a slight difference existing between your carrier and some introductions in the manual.

All the information, specifications and illustrations in the manual are effective in times of printing and our company maintains the right to modify the specification (s) or design (s) of our products at any time without any beforehand notification.

➢ Relevant documents (e.g. operating instructions)

Depending on the application, other operating instructions (e.g. truck, battery charger) may have to be observed when operating the lithium-ion battery.

The execution, operating, warning and safety instructions in these operating instructions must be observed and complied with at all times to prevent personal injury and material damage.

Observe additional device-related provisions and regulations.

➢ Safety notices and text mark-ups

Safety instructions and important explanations are indicated by the following graphics:

⚠ DANGER

Means that failure to comply can cause risk to life and/or major damage to property.

⚠ WARNING

Please strictly adhere to these safety instructions to avoid personal injury or major damage to equipment.

⚠ CAUTION

Please pay attention to the important safety instructions.

ⓘ NOTE

Pay attention to Instruction.

Table of content

Pg.
1 General 1
1.1 Lithium-ion battery Introduction 1
1.1.1 Proprietor responsibilities 1
1.1.2 Intended use 1
1.1.3 Permissable operating conditions 2
1.1.4 Reasonably foreseeable misuse 2
1.1.5 Accessories 2
1.1.6 BMS (Battery Management System) 2
1.1.7 Battery Usage Guidelines and Manufacturer Compliance 3
2 Lithium-ion battery description 4
2.1 Performance data for lithium-ion battery 4
2.1.1 Battery components 4
2.1.2 Information for battery and charger 5
2.1.3 Battery nominal data 5
2.1.4 Charger nominal data 6
2.1.5 BMS nominal data 6
2.2 Battery featuring circular meter 8
2.3 Nameplate 9
2.3.1 Nameplate 9
2.3.2 Identification points 10
2.4 Information on the conformity of lithium-ion batteries: 11
2.5 Battery lifetime and maintenance 11
2.5.1 Optimize Battery Life 11
2.5.2 Maintenance table 12
3 Safety 14
3.1 It is necessary to respect the following guidelines 14
3.2 Warning Indications 16
3.2.1 Labelling for Lithium-ion battery maintenance instructions 17
3.3 Potential hazards 18
3.3.1 Physical damage 18
3.3.2 Short circuits 18
3.3.3 Temperature effects 18
3.3.4 Examples of where to store a non-functional battery 18
3.3.5 Fire hazard 18
3.3.6 Material discharge 19
3.4 Touch voltage hazard 20
4 Operation 21
4.1 Lithium-ion battery routine inspection 21
4.2 Instructions on faulty batteries inspection 21
4.3 Checking batteries for signs of malfunction 21
4.4 Hazard of faulty or discarded battery and recycle 22
4.5 Commissioning 23
4.6 Charging 23
4.6.1 Charging the battery 25
4.6.2 Discharging the battery 26
4.7 Transportation 27
4.7.1 Shipping faulty batteries 27
4.8 Lifting by crane 28
4.9 Removing or installing the battery 29
4.10 Instructions for disposal 30

Table of content

Pg.
4.10.1 The requirements of recycling....30
4.11 Storage....31
4.12 Cleaning....31
5 Troubleshooting....32
5.1 Common Problems and Solutions....32
5.2 Emergency measures for battery pack smoke or fire....32
5.2.1 Overheating warning....32
5.2.2 Smoke and fire burning and exploding....32

1 General

1.1 Lithium-ion battery Introduction

Lithium-ion (Li-ion) batteries have many advantages over traditional lead acid and other types of batteries. EP's Li-ion batteries are classified as LFP ‘Lithium Iron Phosphate’ or LiFePO4. The lithium-ion battery unit is composed of battery cells in series or in parallel; It is equipped with battery management system for monitoring and protecting the lithium-ion battery; The different or the same electrical connector design for charging and discharging; The circular meter shows data, error code, total voltage and temperature, ect. When stored, handled, and used properly, they also have a longer service life than other batteries have a higher power density, don’t need a cooling down period, and can be opportunity charged. EP's priority is safety and establishing the following safety procedures for storing, handling and use of these batteries will help prevent fires and explosions. Companies training employees to recognize the hazards of Li-ion and other types of batteries as well as how to handle, store and manage them properly will help to avoid damage to the batteries resulting in possible fires and explosions.

This battery should not be used at a very low SOC (state of charge) status. To ensure the battery life, should avoid the discharge depth of more than 80% of the rated capacity of the battery. Whether it is partially discharged or fully discharged, the battery should be immediately charged.

Lithium batteries have a special charger and may not be charged with other types of battery chargers, so as not to charge lithium batteries. The new factory battery should not be discharged, it must be fully charged before use.

1.1.1 Proprietor responsibilities

For the purposes of these operating instructions, the "owner" is defined as any natural or legal person who either uses the lithium-ion battery himself, or on whose behalf it is used. In special cases (e.g. leasing or renting), the owner is considered to be the person who is to carry out the specified operational duties in accordance with existing contractual agreements between the proprietor and operator of the lithium-ion battery.

The owner must ensure that the lithium-ion battery is used only for the purpose for which it is intended and that dangers to life and health of the operator or third parties are excluded. Furthermore, accident prevention regulations, safety regulations and operating, servicing and repair guidelines must be followed. The owner must ensure that all operators have read and understood these operating instructions.

1.1.2 Intended use

- Powering electric forklifts for material handling and logistics operations.
- Providing reliable energy storage for prolonged usage in warehouse environments.
- Enhancing efficiency and productivity in industrial settings.
- Facilitating indoor and outdoor material transportation tasks.
- Supporting sustainable operations through reduced emissions and maintenance requirements.

NOTE

Please note that using our lithium-ion batteries for purposes other than those specified above may compromise performance and safety. For inquiries regarding the intended use of our lithium-ion batteries for electric forklifts, please contact our After-sales service department.

1.1.3 Permissable operating conditions

The lithium-ion battery is intended exclusively for use in industrial trucks specified and approved by the manufacturer. Any other use beyond the scope of the above is not appropriate. The owner or user of the lithium-ion battery alone shall be liable for any damage arising from the above. Furthermore, any liability and warranty claims shall be rendered null and void.

- Operational application temperature 0° C-40° C, humidity < 80%;
- Charging application temperature 5° C-40° C;
- The battery's maximum operation altitude is up to 2000m;

NOTE

Lithium-ion battery working temperature is divided into charging temperature requirement and discharging temperature requirement:

The charging temperature range is 0°C-40°C. A high-rate recharging operation below 0°C may lead to battery damage, so we recommend temperature range is 5°C-40°C;

The discharging temperature range is -20°C-60°C. If used in low temperature°C-20°C-0°C, battery discharge capacity will be smaller compared with the one in normal temperature condition, which is normal; battery used between 40°C-60°C in the long run will accelerate the aging of the internal material. It may shorten the service life of battery, so not recommended. So we recommend working temperature is 0°C-40°C.

1.1.4 Reasonably foreseeable misuse

- Never short circuit the battery terminals.
- Do not reverse the battery polarity.
- Do not overcharge.

1.1.5 Accessories

Do not use a charger that is not released by EP for lithium-ion battery.

1.1.6 BMS (Battery Management System)

- The EP battery management system (BMS) for a lithium-ion battery is crucial for the safety and performance of the system. Here are the most important features and functions:
- Current, voltage and temperature monitoring: the BMS continuously monitors the charging current, battery voltage and temperature of the cells, as well as the individual modules, during the charging and operating cycle.
- Differentiation for cells and modules: The BMS can differentiate between the individual cells and modules and monitor and control individual parameters for each cell or module to ensure even utilization and optimum performance.
- Safety shutdown: If safety limits are exceeded, such as critical temperatures, currents or voltages, the BMS safely shuts down the system to prevent damage to the battery and ensure safety.
- Output of error codes with corresponding action: The BMS recognizes errors and outputs corresponding error codes. Depending on the severity of the fault, the BMS can take measures such as issuing warning messages or switching off the system.
- Permanent communication with the vehicle's CAN bus: The BMS communicates continuously with the vehicle's Controller Area Network (CAN) bus to exchange important data and ensure that the BMS and other vehicle systems work in a coordinated manner.

- Integrated telemetry system (optional): In certain EP vehicle types, a lithium-ion battery is equipped with an integrated telemetry system. This system records and transmits important battery operating data, such as cell voltages, temperatures and currents. This telemetry data can be accessed online and enables real-time monitoring and analysis of battery performance.

1.1.7 Battery Usage Guidelines and Manufacturer Compliance

The use of batteries must strictly follow the manufacturer's instructions. Any modification to lithium batteries or their safety devices is strictly prohibited unless prior written approval is obtained from our company. Only original spare parts ensure compliance with the manufacturer's quality management standards. Our company shall not be liable for any vehicle malfunctions or accidents caused by the use of non-original spare parts. For more details, please refer to the lithium battery warranty agreement and relevant contract terms.

2 Lithium-ion battery description

2.1 Performance data for lithium-ion battery

2.1.1 Battery components

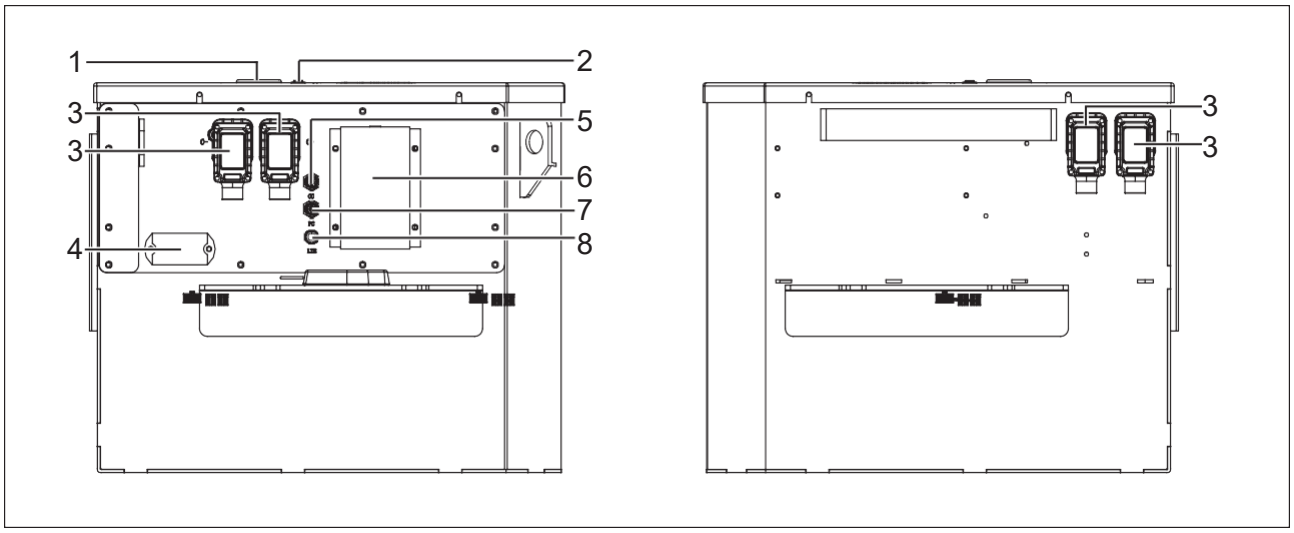

Item	Description	Function
1	Circular meter	Show information of lithium-ion battery.
2	On/off button	Start up or cut off the lithium-ion battery
3	Charge/Discharge terminal	Connection for charging and discharging
4	Fuse	Protect the circuit from overcurrent
5	Charge communication port	Communication management during charging
6	DC-DC	Convert voltage
7	Discharge communication port	Communication management during discharging
8	GPS	Telematics

2.1.2 Information for battery and charger

Battery type	Voltage/Rated capacity	Dimensions	Weight	Charger
ZL80230-43	80V / 230 Ah	740 * 604.5 * 498.9	181kg ± 5kg	25 A / 35 A / 60 A / 100 A

2.1.3 Battery nominal data

Battery cell		
1	Cell material	LFP
2	Nominal Voltage	3.2V
3	Voltage rang	2.5V~3.65V
Battery system		
1	Battery box size	740*604.5*498.9
2	Weight	181kg±5kg
3	Group method	Series-parallel connection method
4	Rated voltage	76.8V
5	Rated capacity	230Ah@25℃ 1C discharge
6	Voltage rang	60V~87.6V
7	Total enery	17.664 kWh
8	Rated charging current	115A
9	Rated discharge current	115A
10	Maximum continuous discharge current (10S)	460A
11	Ambient relative humidity	≤80%RH
12	Standard discharge temperature range	-20℃ ~ 50 ℃ (discharge)
13	Standard charging temperature range	0℃ ~ 50 ℃

2.1.4 Charger nominal data

1	Adaptive voltage	65V~90V
2	Output current	100A
3	Output voltage	380±15%
4	Output voltage	65V~90V
5	Output power	9kW
6	Protected mode	Input overvoltage protection, input undervoltage protection, output overvoltage protection, output overcurrent protection, short circuit protection, product overtemperature protection, battery reverse protection, battery open circuit protection
7	Communication function	CAN communication
8	Charging port	REMA320 interface
9	Way to install	Safety fixed
10	Display	Instrument
11	Mechanical life	10000 times
12	Operating temperature	-10℃ ~40℃
13	Operating humidity	30%RH~50%RH

2.1.5 BMS nominal data

BMS management system function			
No.	**Item**	**Function**	**Function description**
1	Inspection/ estimates	Monomer voltage detection	Accurate acquisition of all cell voltage data
2		Total voltage detection	Accurate acquisition of total voltage data
3		Temperature collecting	Accurate detection of battery temperature
4		Current inspection	Accurate detection of charge-discharge currents
5		SOC Estimate	Hall sensor is used to obtain the input and output current of the battery, and the SOC estimation of the battery is carried out by the method of Ampere-time integration
6	Communication function	CAN communication	CAN communication and debugging

7	Protection function	Short-circuit protection	Short circuit in the power circuit, main relay disconnected
8		Over current protection	Overcurrent in the power circuit, main relay disconnected
9		Over charging protection	Battery system overcharge, main relay disconnected
10		Over discharging protection	Battery system overdischarge, main relay disconnected
11		Over temperature protection	System outside normal operating temperature range, main relay disconnected
12	Sleep wake	Sleep awakening function	Vehicle key wake-up, charge communication wake-up, battery switch button wake-up

BMS specification parameters			
No.	Item		Remark
1	Working voltage range	62.4V~87.6V	Selection
2	Normal power consumption	10mA	Stable
3	Detection number of series	24 series	Selection
4	Temperature detection points	6PCS	Selection
5	Measurement range of cells voltage	2.4V~4.5V	Selection
6	Measurement accuracy of cell voltage	±10mV	Selection
7	Current detection accuracy	±1A	Selection
8	Electricity display accuracy	±1%	Stable
9	Temperature range	-45~100℃	Selection
10	Temperature measurement accuracy	±1℃	Selection
11	Equalizing current	90mA	Selection
12	Communication functions	CAN	Selection
13	low power consumption	20uA	Stable
14	Working environment temperature range	-25℃ ~ 60℃	Stable

2.2 Battery featuring circular meter

No.	Name	Description
1	Energy display	When all 10 cells are on, it indicates that the battery is full; When the first cell and the second flash alternately, it indicates that the battery is low and must be charged. The battery remaining charge is displayed; “100%” indicates that the battery is fully charged.
2	Total voltage	The sum of the total voltages of the lithium battery series (normal voltage rang of total voltages of the battery2.5~3.65V*15 for 48V 2.5~3.65V*24 for 80V)
3	Temperature	Battery temperature
4	Charging current	Current value when charging the lithium battery
5	Maximum cell voltage	Maximum value of cell voltage, (normal voltage rang of the cells of the battery2.5~3.65V)
6	No. of cell	Identification No. of the cell with maximum voltage.
7	Minimum cell voltage	Minimum value of cell voltage (normal voltage rang of the cells of the battery2.5~3.65V)
8	Cell No. of minimum cell voltage	Identification No. of the cell with minimum voltage.
9	Fault code	If the battery fails, the fault code will be displayed

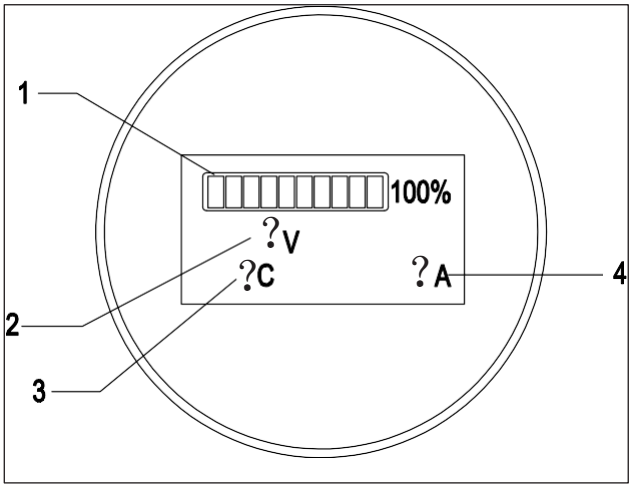

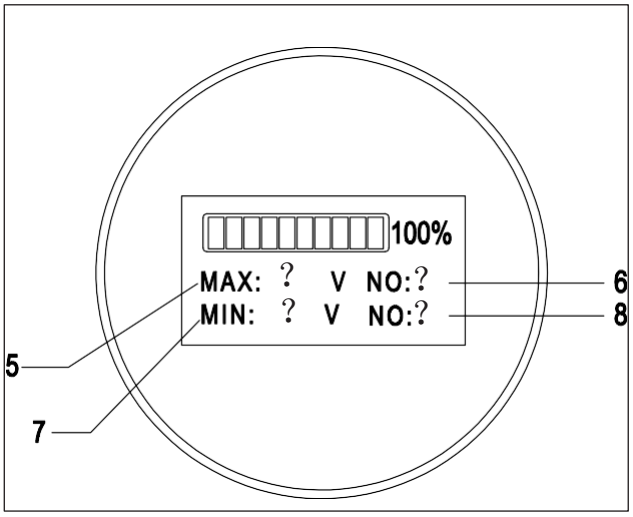

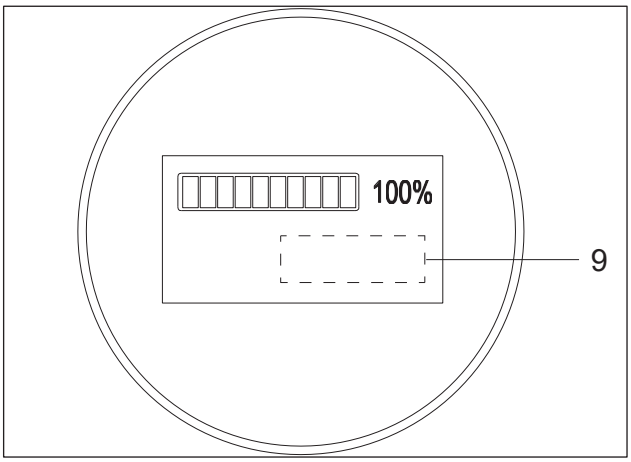

2.3 Nameplate

2.3.1 Nameplate

Item	Description
1	Battery name
2	Battery designation
3	Battery model
4	Serial number
5	Manufacturer
6	Address
7	Manufacturing date
8	Battery weight
9	Nominal voltage
10	Nominal energy in Watt hours
11	Recommended charge voltage
12	Warning Indications(See section 3.2)

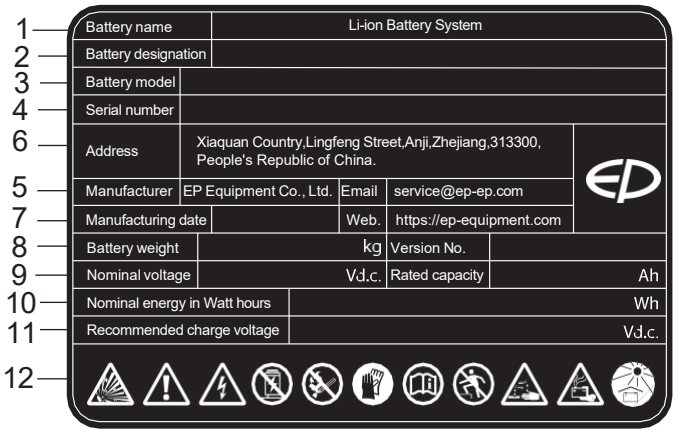

NOTE

The label position is subject to the actual lithium-ion battery.

2.3.2 Identification points

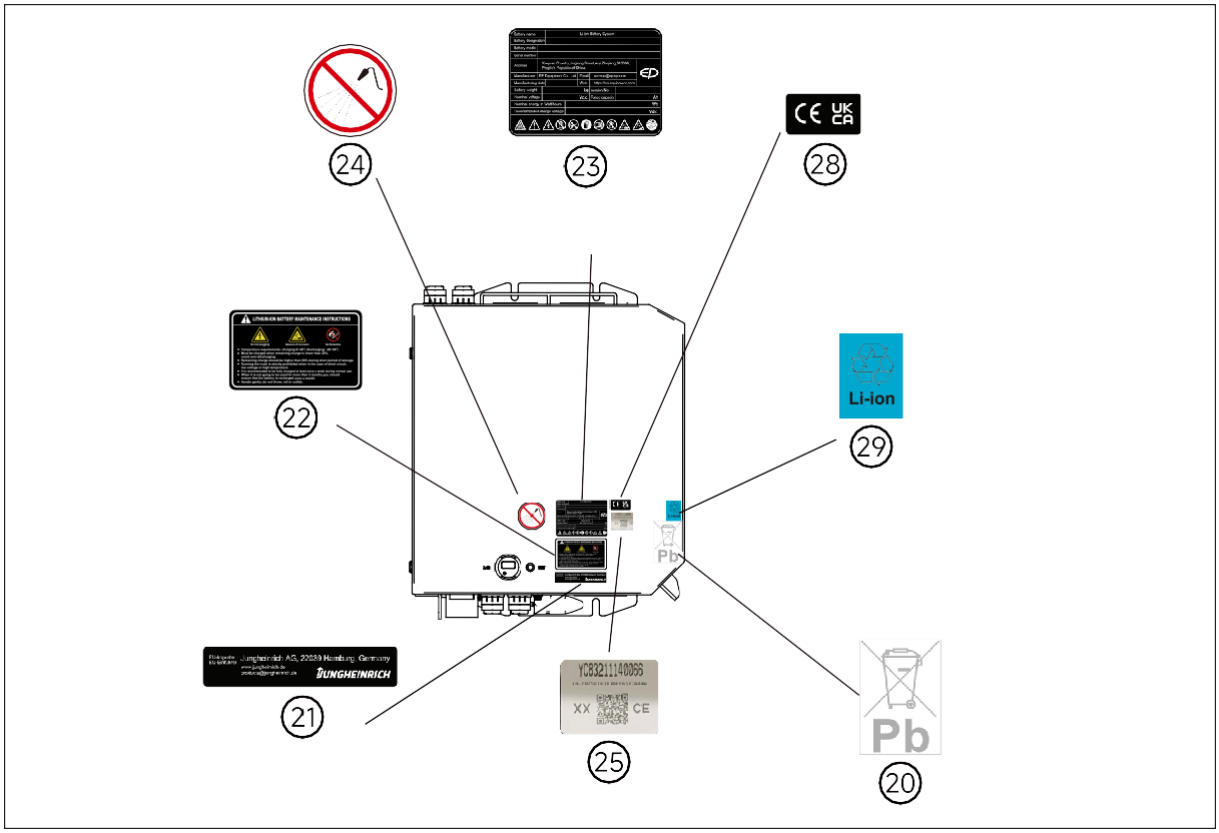

Item	Description
20	Pb battery classification collection labels
21	Jungheinrich information label
22	Nameplate for lithium-ion battery usage and maintenance instructions
23	Lithium-ion battery label
24	No spraying labels
25	Remote link QR code label
28	CE/UKCA label
29	LI-ION battery recycling label

2.4 Information on the conformity of lithium-ion batteries:

1) Regulation (EU) 2023/1542 in Articles 6, 10 and 13.

2) Directive 2011/65/EU including amendment (EU)2015/863 in the latest valid version.

3) EMC Directive 2014/30/EU in the latest valid version in the harmonised standards EN 12895:2015+A1:2019, EN IEC 61000-6-2:2019 and EN IEC 61000-6-4:2019.

4) The harmonised standard EN 62619 in the latest valid version and to the harmonised standard EN 1175:2020 Annex C.2 as energy sources for industrial trucks.

5) If a radio system is installed, we declare that it complies with the RED Directive 2014/53/EU.

2.5 Battery lifetime and maintenance

2.5.1 Optimize Battery Life

Always use and follow the battery management system (BMS). The BMS is the electronic system that monitors battery data and use that data to its operating environment to influence the battery's safety, performance, and service life. It also functions as a safety cut-off device in case of overcharging, overcurrent, or overheating. Lithium-ion battery life is greatly reduced if used outside a temperature range of 0ºC to 40ºC (32ºF to 104ºF) or in an environment with greater than 85% humidity. EP recommends to opportunity charge lithium-ion batteries.

This is when the battery is recharged for short intervals during a shift period. It reduces or eliminates the need for long charging periods, changing batteries during a shift, and extending shift periods.

2.5.2 Maintenance table

No.	Maintenance content	Method of operation	Note	Frequency
1	Check if battery capacity is too low	Check instrumentation SOC display	Make sure the battery is not stored without charge for a long time. If the battery system needs to be put on hold for a long time, it is best to keep the battery in half power state and charge the battery every 2 months.	Everyday
2	The battery pack charge and discharge current(if necessary)	Check instrumentation display	Make sure battery pack charge and discharge current meet meet requirements	Everyday
3	Check the voltage and temperature of a lithium battery(if necessary)	Check instrumentation display	Make sure battery pack charge and discharge current meet meet requirements	Everyday
4	Connector pins at the bottom of the battery(if necessary)	Perform a visual inspection	If any ablation or deformation occurs in daily inspection, the battery connector pins should be replaced in time.	Everyday
5	Check whether the appearance is deformed, whether the surface is oxidized, paint removing, the mounting position is offset, and the cabinet is damaged;	Perform a visual inspection	check the reason for analysis and give it a fix	Everyday
6	Check the entire battery as well as the surface beneath it for signs of fluid leakage.	Perform a visual inspection	check the reason for analysis and give it a fix	Everyday

No.	Maintenance content	Method of operation	Note	
7	Clean the lithium battery and charger(if equipped) with a dry cloth or compressed air.	Perform a visual inspection, Wear insulated gloves and shake it gently	Make sure it tight	weekly
8	Whether the external wiring harness has worn, imprint, creases and exposed line core	Perform a visual inspection	Make the wiring harness fixed well	weekly
9	Check that the surface of lithium-ion battery	No dust, no water, no corrosion, oxidation, rust, etc.	Clean surface if you found dust, corrosion, oxidation, rust by using dustless cloth or air compressor ,water battery is strictly prohibited to use	weekly
10	Check that the outside screws of the battery are fastened	Torque wrench correction requires no loosening	Reinforce screws	weekly
11	Check for water or foreign matter in the plug and socket and check for rust or charring(if necessary)	Perform a visual inspection	check the reason for analysis and give it a fix	Monthly
12	Check the cable for damage and loose joints(if necessary)	Perform a visual inspection	check the reason for analysis and give it a fix	Monthly
13	Check the battery case for abnormalities such as cracks, deformation, and bulging.	Perform a visual inspection	check the reason for analysis and give it a fix	Monthly

3 Safety

3.1 It is necessary to respect the following guidelines

- The battery is not used at a loss of power. To ensure the battery life, should avoid the discharge depth of more than 80% of the rated capacity of the battery. Whether it is partially discharged or fully discharged, the battery should be immediately charged.
- Lithium-ion batteries have a special charger, may not be charged with other types of battery charger, so as not to charge lithium batteries
- The new factory battery should not be discharged, it must be fully charged before use.
- Only trained and authorized personnel are permitted to charge, service and replace the batteries.
- Do not place lithium-ion batteries on or near flames or hot heat sources (> 65°C). This may cause the batteries to overheat or burst into flames. This type of use also impairs the performance of the batteries and reduces their service life.
- It is forbidden to take out the battery in the charging state.
- It is forbidden to use and store the battery at low power (the use and storage of power loss will cause the early loss of battery system capacity and accelerate the service life of the battery pack);
- It is forbidden for unqualified personnel to dismantle and overhaul the battery system and supporting charger and other devices; the battery system is a dangerous product, and maintenance and replacement can only be performed by professionals;
- Do not hit, throw or trample on the battery, do not heat the battery, do not throw the battery into the water.
- Use carbon dioxide or dry powder fire extinguishers if the battery harness smokes and ignites. If the battery is on fire, use a high-pressure water gun to extinguish the fire at a long distance.
- If the connection of the battery pole is found to be oxidized, wipe it with a dry cloth and polishit with a fine sandpaper before use. Otherwise, it may cause poor contact and the function fails.
- Prohibit the use of strong static electricity and strong magnetic field, otherwise easy to damage the battery safety protection device, bringing security risks.
- Do not use this series of products with other models or types of batteries in series or in parallel; prohibit the entire system with lithium-ion battery protection circuit board or battery management system, the power system in series or in parallel operation, if necessary, please contact this Company technical department to obtain the correct technical support.
- When charging and discharging Try to avoid splashing water or other conductive objects on the battery cover and pole, such as exposure to heavy rain.
- Once inadvertently make some kind of conductor come into contact with the positive and negative poles of a single battery or battery pack at the same time to cause a short circuit, be sure to disconnect the circuit which causes the short circuit in the shortest time.
- Risk of fire or smoke: LFP batteries can leak / evaporate or decompose and release flammable electrolyte under the condition of 150 ℃ if they are improperly used or affected by the environment. Hydrogen fluoride (HF) and phosphorus oxides may form during fire, and chemical reactions between LIPF6 and water in the electrolyte will produce fluoride and carbon dioxide.

- Contact with eyes: Electrolyte inside the battery will cause eye irritation and inadvertent contact. Please do not rub it. Rinse immediately with plenty of water for at least 15 minutes. If necessary, please go to the hospital for treatment immediately. Otherwise it will hurt your eyes.
- Contact with skin: The electrolyte inside the battery may cause skin infections, inadvertent contact, take off contaminated clothing and wash the infection with plenty of water and soap for at least 15 minutes, do not rub the ointment.
- Inhalation: When the battery is leaked or ruptured, the internal components of the battery may cause mucus, edema and other respiratory tract problems, inadvertently inhaled, to fresh air and ventilated contaminated area. If necessary, oxygen or artificial respiration.
- Special Protection Tools: Use breathing apparatus to avoid inhalation of irritating gases. Wear protective clothing or other devices to prevent body contact with the electrolyte.
- Using lifting and delivery devices as specified. Prevent the battery cell, interface and connection cable from being damaged by the lifting hook!
- This lithium-ion battery may not be approved for your specific forklift. Only use a lithium-ion battery,if it has been approved by he forklift manufacturer for your forklift. The lithium-ion battery shall only be handled by trained and authorized personnel.

⚠DANGER

Failure to comply with these safety instructions can result in fire and explosion or the leakage of harmful materials.

⚠WARNING

Should such issues as failing to abide by the operation manual, failing to use the original parts for maintenance or damaging caused by users themselves occur, the quality guarantee will be invalid automatically!

⚠DANGER

Electrical danger

Only the After-Sales Service Centre technicians can open the battery.

3.2 Warning Indications

Follow the operating instructions and keep them in a visible position near the battery charger. If any faults are found on the lithium-ion battery,immediately take it out of service and contact the manufacturer's customer service department.

Always wear protective clothing (e.g. safety goggles and safety gloves) when working on cells and batteries!

- No smoke and fire!
- Avoid the existence of open fire, fiery metal wire or sparks around the lithium-ion battery, otherwise explosion or fire disaster may occur!

- Explosion or fire disaster is likely to occur; avoid short circuit!
- Keep the battery away from all fire sources, heat sources and flammable or explosive materials!

- Avoid hot plugging!
- Dangerous voltage!
- Notice: the metal part of the battery cell is electrified, so don't place any external object or tool on the battery cell!

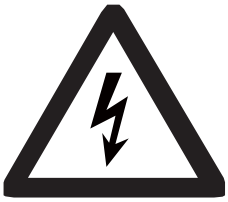

Do not place the battery on top of conductive objects!

- Don't knock over the battery!
- Using lifting and delivery devices as specified. Prevent the battery cell, interface and connection cable from being damaged by the lifting hook!
- If the materials leak out, do not inhale the fumes. Wear safety gloves!
- Always wash your hands after completing the work. Use only insulated tools.

Don't trample on the battery to prevent it from fierce shaking or shacking!

- Protect the battery from solar radiation or other forms of heat radiation.
- Do not expose the battery to any sources of heat.

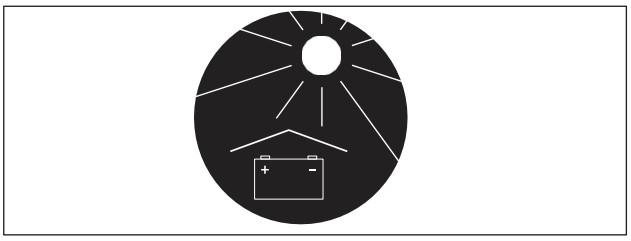

Electrolyte fluid can be discharged if the battery is physically damaged. Electrolyte fluid is harmful and must not come into contact with the skin or eyes(see section 3.3.7)

- Do not physically alter the battery, strike, crush, compress, notch, dent or modify it in any way.
- Do not open the battery, damage, penetrate, bend, heat or allow it to become hot, do not throw it on the fire, short or immerse it in or wash it with water.
- Do not drop it or allow anything to fall on it, do not store it or operate it in a microwave oven, kiln or pressure vessel etc.

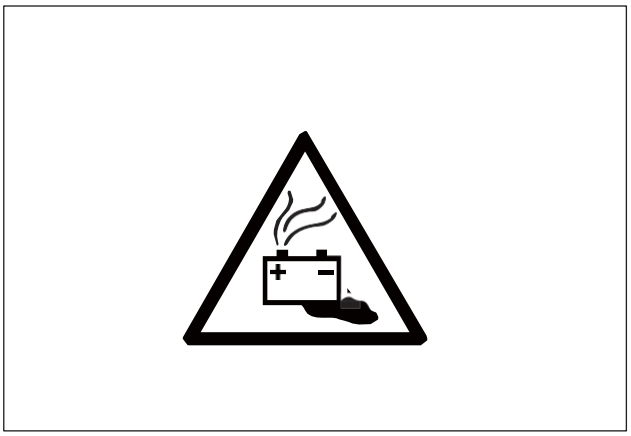

3.2.1 Labelling for Lithium-ion battery maintenance instructions

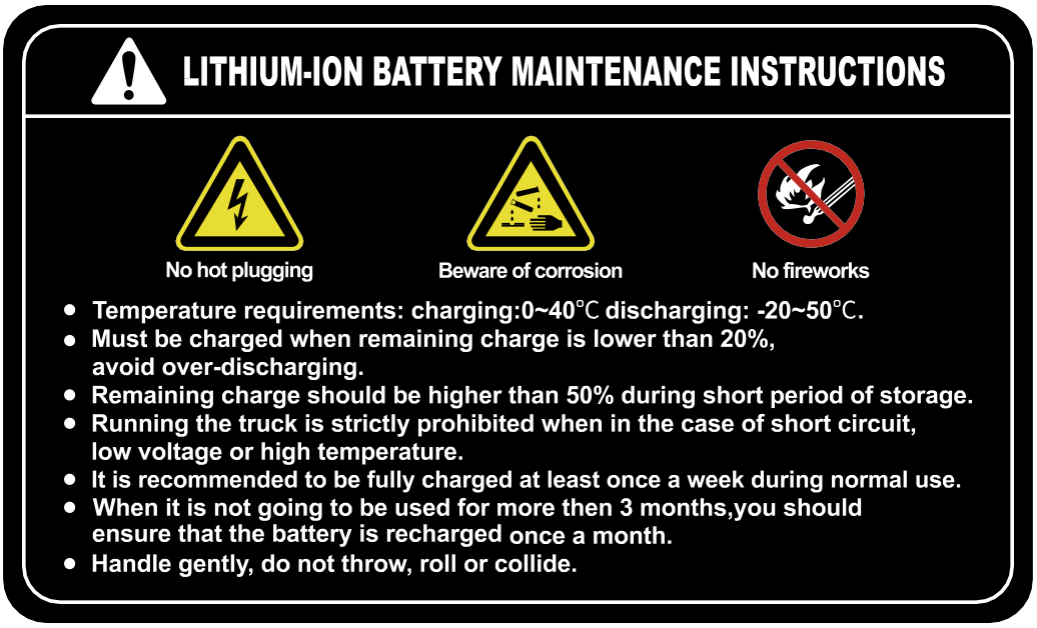

3.3 Potential hazards

- No hazards are anticipated if the equipment is used correctly.
- Do not use the equipment for anything other than its intended purpose.
- The following hazards can arise in the event of improper use:

3.3.1 Physical damage

This can occur if a battery falls or is deformed through pressure (e.g. truck forks penetrate the battery housing).

Mechanical damage includes cracks, breakage, splinters or holes in the battery housing. This type of damage may be caused by a short circuit inside the battery,

which may result in harmful materials leaking, fire or battery explosion.

3.3.2 Short circuits

These may be caused by connecting the two battery terminals (e.g. battery immersed in water)

3.3.3 Temperature effects

High temperatures caused for example by sunlight or being store in warm locations (e.g. near ovens) can result in harmful materials leaking, fire.

In order to avoid fire and leakage of harmful materials, a safe place for storing batteries must satisfy the following criteria:

- Do not store in places often frequented by personnel.
- Do not store in places where valuable objects (e.g. cars) are stored.
- Fire extinguisher must be available to put out any fires.
- There should not be any fire or smoke detectors in the vicinity in order to ensure that an automatic fire detection system is only activated in the event of actual danger (e.g. naked flames).
- Small amounts of discharge from a single battery are not critical to the environment. Above-average natural ventilation is required in this case.
- No ventilation intake pipes should be in the vicinity, as discharged content could spread within a building.

3.3.4 Examples of where to store a non-functional battery

- Roofed outdoor position.
- Ventilated container.
- Covered box with pressure and smoke discharge option.

3.3.5 Fire hazard

⚠WARNING

Physical damage, thermal effects or incorrect storage in the event of a defect can result in fire.

Since the extinguishing of burning lithium-ion battery systems with suitable extinguishing agents extinguishing agents, the responsible fire brigade should be should be informed in advance or the company fire. Fire protection assistants should be trained accordingly.

NOTE

A suitable method is cooling down cooling with water. Accordingly the parking area and charging stations should be equipped with extinguishing facilities.

⚠DANGER

There is a risk of fire.

Use water-based extinguishers,CO2, dry chemical fire extinguishers.

3.3.6 Material discharge

➢ **Battery electrolyte fluid can be hazardous**

Electrolyte fluid can be discharged if the battery is physically damaged. Electrolyte fluid is harmful and must not come into contact with the skin or eyes.

If it does, rinse the affected parts with plenty of water and seek medical assistance immediately.

In the event of skin irritation or if any substances are breathed in, seek medical assistance immediately.

In the event of inhalation bring the affected person into the fresh air and keep them still.

➢ **Precautionary measures for personnel**

- Keep personnel away and facing the wind.
- Block off the affected area.
- Ensure there is adequate ventilation.
- Wear personal protective equipment.
- If vapours / dust / aerosols are present, use self-contained breathing apparatus.

➢ **Precautionary measures for the environment**

Do not allow spilled fluids to enter the water system, drainage system or the underground water.

➢ **Cleaning measures**

The leaked fluid must be removed professionally by the operating company on the basis of a risk assessment and disposed of in the correct manner. The fire brigade, the Agency for Technical Relief or similar institutions must be used. Absorb residues with liquid-absorbent material (such as vermiculite, sand, universal binders and pebble grain).

3.4 Touch voltage hazard

⚠WARNING

Touch voltage hazard!
Hazardous touch voltages may occur in the event of a technical or mechanical defect on the battery. Touch voltages also occur on seemingly discharged batteries. Touching the battery terminals or live attachments (battery cable, battery connector etc.) can result in dangerous current flows through the body. There is a risk of serious, irreversible or fatal injuries.

- Tag out the faulty battery and take out of service.
- Do not touch faulty batteries
- Do not place any objects or tools on the lithium-ion battery to avoid short-circuiting
- the battery.
- Do not short-circuit the lithium-ion battery.
- Notify the customer service department.

4 Operation

4.1 Lithium-ion battery routine inspection

⚠CAUTION

The following items should be checked every day.

Daily inspection items /Additional servicing work to be performed every 1000 hours or every 6 months.	**Troubleshooting**
Liquid leakage and corrosion at the charging/ discharging contacts at the bottom of the battery	Stop using the battery and handle in accordance with the chapter "**4.4 Hazard of faulty or discarded battery and recycle**".
Signs of liquid leakage at the bottom of the battery	
Case broken	
Swollen battery	
Connector pins burnt,deformation,ablation	Contact your authorised dealer to replace the contacts or Connector pins should be performed by a certified technician.

4.2 Instructions on faulty batteries inspection

⚠DANGER

Faulty batteries may cause short circuits and lead to fires. To eliminate potential safety hazards and avoid unnecessary economic losses and other consequences, daily inspection is required · please act in strict accordance with the guidelines.

4.3 Checking batteries for signs of malfunction

- Whether there is any leakage between the communication terminal and charging/discharging pins at the bottom of the battery,and in the gaps around the pins;
- Check whether there are pungent smells;
- Check the middle connection of the body for swelling of the housing or internal cells abnormal expansion,bulge;
- Check whether there are crack or damage;
- Check the battery for signs of impact and damage.

4.4 Hazard of faulty or discarded battery and recycle

Please monitor the battery status when in use and in storage. If you find any broken batteries, electrolyte leakage, abnormal expansion or pungent odors due to shipping damage or abnormal vibration, please stop use immediately and keep at least a 5 meter perimeter around the effected batteries. Please dispose of the damaged batteries properly and contact a recycling company to recycle the batteries (See chapter 10 Instructions for disposal). For batteries that are under EP warranty policy, EP will access the warranty claim according to your submission of the battery nameplate photo.

During the period waiting for disposal or recycle, please stock damaged and old batteries carefully by following instructions:

1. Damaged and discarded battery temporary storage needs to be placed in an iron or plastic container with water that can cover whole battery at least 5 days (The battery may emit smoke when immersed in water. This is the process of consuming energy by the leaking battery, which is a normal reaction).

- Keep the container and batteries outdoors and 5 meters away from other things, especially flammable items.
- Use protective gloves when putting batteries in or out of water.
- Do not stack damaged or old batteries.

2. For big battery with inner and outer boxes structure, Keep the batteries outdoors at least 5 days.and contact a recycling company to recycle the batteries.Place the faulty batteries outdoors in an openand shaded area, this area must be well-ventilated and be equipped with fire equipment.

NOTE

Lithium-ion batteries that are damaged or in uncertain conditions shall only be handled by special trained and authorized lithium-ion battery technican.

⚠WARNING

Dispose of faulty or discarded batteries in time;

⚠WARNING

Do not store faulty or discarded for a long time.

⚠WARNING

No load bearing, squeezing and contact stacking when storing faulty or discarded temporary;

⚠DANGER

Do not place faulty or discarded near cargo warehouses or near flammable and explosive dangerous goods.

4.5 Commissioning

⚠WARNING

Unsuitable batteries that have not been approved by EP for the truck can be hazardous The design, weight and dimensions of the battery have a considerable effect on the operational safety of the truck, in particular its stability and capacity. The use of unsuitable batteries that have not been approved for the truck by EP, can lead to a deterioration of the braking characteristics of the truck during energy recovery, causing considerable damage to the electric controller and resulting in serious danger to the health and safety of individuals. Only EP-approved batteries may be used on the truck. Battery equipment may only be replaced with the agreement of EP. When replacing/installing the battery make sure the battery is securely located in the battery compartment of the truck. Do not use batteries that have not been approved by the manufacturer.

If damage or other defects are identified on the lithium-ion battery, the lithium-ion battery must not be used until it has been properly repaired.

Report any defects immediately to your supervisor. Tag out the faulty lithium-ion battery and take it out of service. Do not return the lithium-ion battery to service until the fault has been identified and rectified. Inform the manufacturer's customer service department or a customer service organization authorized by the manufacturer.

- Check that the equipment is complete.
- Check the lithium-ion battery for damage.
- Check the battery cables and cable connections for damage and correct seating (if present).
- Install the lithium-ion battery if necessary

4.6 Charging

When charging, make sure the battery charger is turned OFF before connecting the battery charging cables. Lithium-ion batteries allow for fast charging, if the battery does not charge completely in a normal period or if the battery management system (BMS) indicates a fault, then remove the battery from service. EP recommends to opportunity charge lithium-ion batteries.

This is when the battery is recharged for short intervals during a shift period. It reduces or eliminates the need for long charging periods, changing batteries during a shift, and extending shift periods.

The positioning of chargers offers new possibilities compared to lead-acid batteries. For instance, they can be placed in parking spaces near break rooms. Furthermore, there is no hydrogen outgassing during the charging and discharging process, which contrasts with lead-acid batteries. During the charging and discharging process, no technical measures are needed for ventilation or air circulation due to the absence of hydrogen outgassing with lithium-ion batteries. However, fire protection regulations remain consistent with those for lead-acid battery chargers, requiring a minimum distance of 2.5 meters from combustible materials.

ⓘNOTE

The workplace regulations must be observed (emergency exits, escape routes, traffic routes, ... must be kept clear).

⚠CAUTION

- *No metal objects should be placed on the battery.*
- *Be careful of short-circuiting the battery!*
- *No modification of the lithium-ion battery connector;*
- *Do not use irregular charging sockets;*
- *The necessary extinguisher (yellow sand and powder fire extinguisher) should be equipped around the charger so that emergency extinguishing can be carried out under extreme conditions.*
- *Do not modify or disassemble the charging port and charging equipment, which may result in charging failure and fire.*
- *After the charging is finished, do not disconnect the charging device when it is wet or standing in the water, as this may cause electric shock and cause personal injury.*
- *To avoid damage to charger cord plug and receptacle, do not pull on charger cord plug. Do not twist, rock or bend plug sideways. Do not use if plug or receptacle is damaged. Loose or feels hot otherwise fire, property damage or personal injury may result.*
- *Connect only properly grounded AC outlet. Do not touch uninsulated protion of output connector or uninsulated battery terminal. Never try to change a frozen battery. There's the danger of explosion!*

⚠WARNING

Charging must only be performed by individuals who are fully familiar with the relevant charging safety instructions.

ⓘNOTE

- *If the truck equipped with heating system can be charged at low temperature. After plugging the battery into the charger, it will be heated above 0 before charging.*

4.6.1 Charging the battery

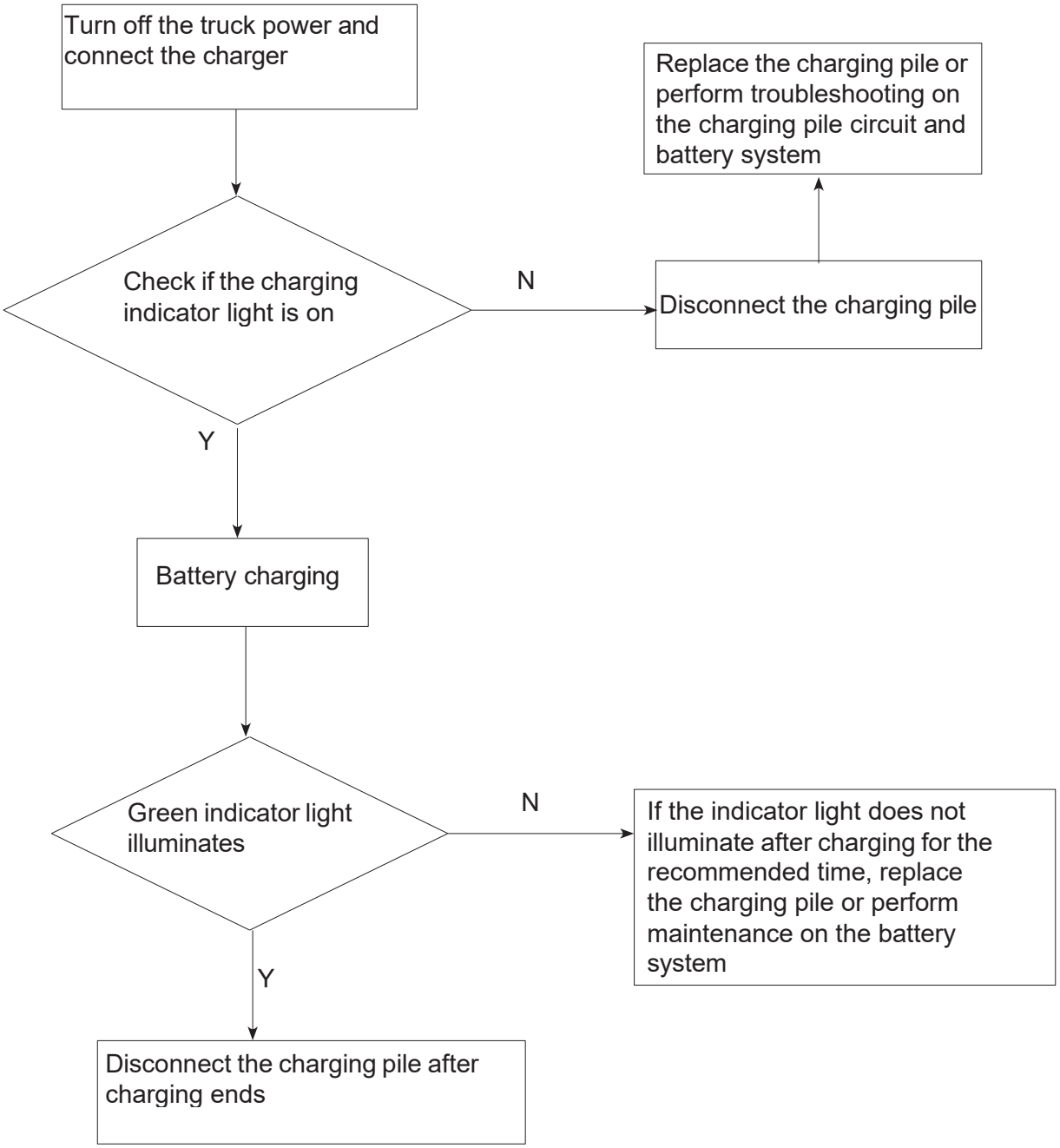

4.6.2 Discharging the battery

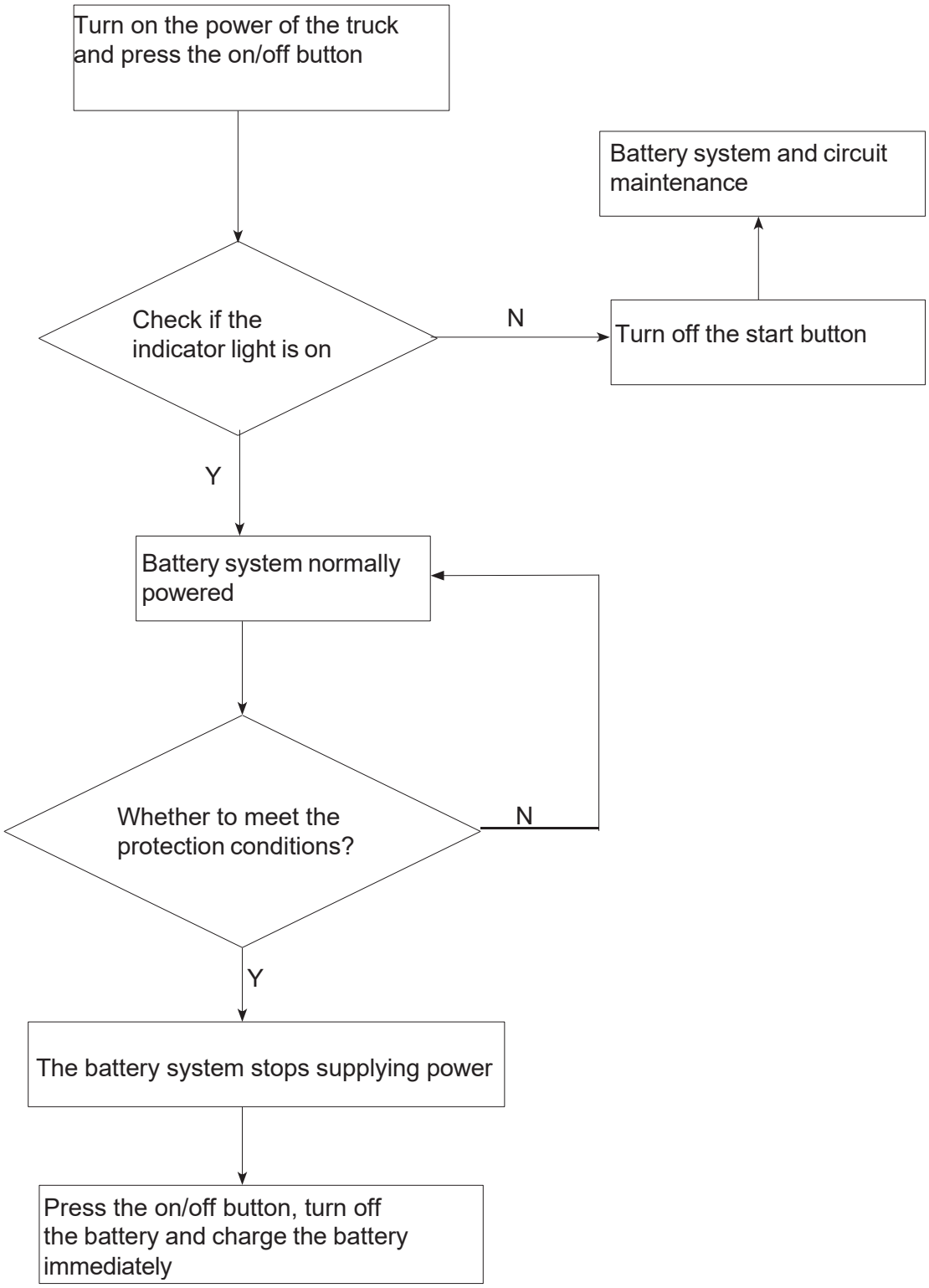

4.7 Transportation

Before transporting any lithium-ion battery, check the current regulations on the transport of dangerous goods. Comply with these when preparing the packaging and transport. Train authorised staff to dispatch lithium-ion batteries.

NOTE

It is recommended that the original packaging is kept for any subsequent dispatch.

A lithium-ion battery is a special product.

Special precautions should be taken when:

Transporting a truck packed with Equipment or Lithium batteries contained in Equipment.

- *Transporting only the lithium battery.*
- *A class 9 danger label must be affixed to the packaging for transport.*

It is different if the battery is transported on its own or in a truck. An example of a label appears in this supplement(see figure below). Refer to the latest current regulations before dispatch as the information might have changed since this supplement was written.

Special documents must be sent with the battery. Refer to the applicable standards or regulations.The applicable IATA, ADR and IMDG regulations must be observed during transport.

For UN3480	Lithium-ion Batteries	Fig0000-00080OM
For UN3481	Lithium-ion Batteries packed with Equipment or Lithium batteries contained in Equipment	

WARNING

Do not pack higher than 1.2 m above the floor of the container and secure properly.

NOTE

"Overpack" is the name for the outer packaging of the dangerous goods.

NOTE

Recharge the lithium-ion battery before transporting it taking account of the transport mode (sea, road,air). Excessive discharge on arrival could damage the performance of the battery.

4.7.1 Shipping faulty batteries

To transport these faulty lithium-ion batteries, contact the manufacturer's customer service department. Faulty lithium-ion batteries must not be transported independently.

4.8 Lifting by crane

⚠WARNING

All persons involved in loading by crane must be trained.

- *Incorrect crane loading procedures due to untrained personnel can result in the battery falling. There is a risk of injury to personnel and a risk of material damage to the battery.*
- *Loading must only be performed by specialist personnel trained for this purpose.*
- *The specialist personnel must be instructed in securing loads on road vehicles and handling load securing devices. In each case correct measurements must be taken and appropriate safety measures applied.*

⚠WARNING

Improper lifting of the battery by crane can cause accidents.

The use of unsuitable lifting gear and the improper use of correct lifting gear can cause the battery to fall when being lifted by crane.

Prevent the battery from striking other objects when they are being raised, and avoid any uncontrolled movement. If necessary secure the battery with guide ropes.

- *The battery should only be laden by people who are trained in handling lifting slings and lifting equipment.*
- *Wear personal protective equipment (e.g. safety boots, helmet, hi-vis jacket, protective gloves etc.) when loading by crane.*
- *Use the lifting slings only in the prescribed load direction.*
- *Always attach the crane lifting gear to the prescribed strap points and prevent them from slipping.*
- *Avoiding diagonal pull.*
- *When lifting the lithium-ion battery, ensure that the battery remains level.*
- *Ensure that no one is in the working range of the hoist when using it to lift the battery!*
- *Walking around under the lifted battery is absolutely prohibited.*
- *Use lifting equipment and a hoist that has sufficient carrying capacity to lift the batttery. For the batttery weight , see section nameplate data for lithium-ion battery.*
- *The sling must be fastened at the designated lifting points(handle) when using the hoist.*

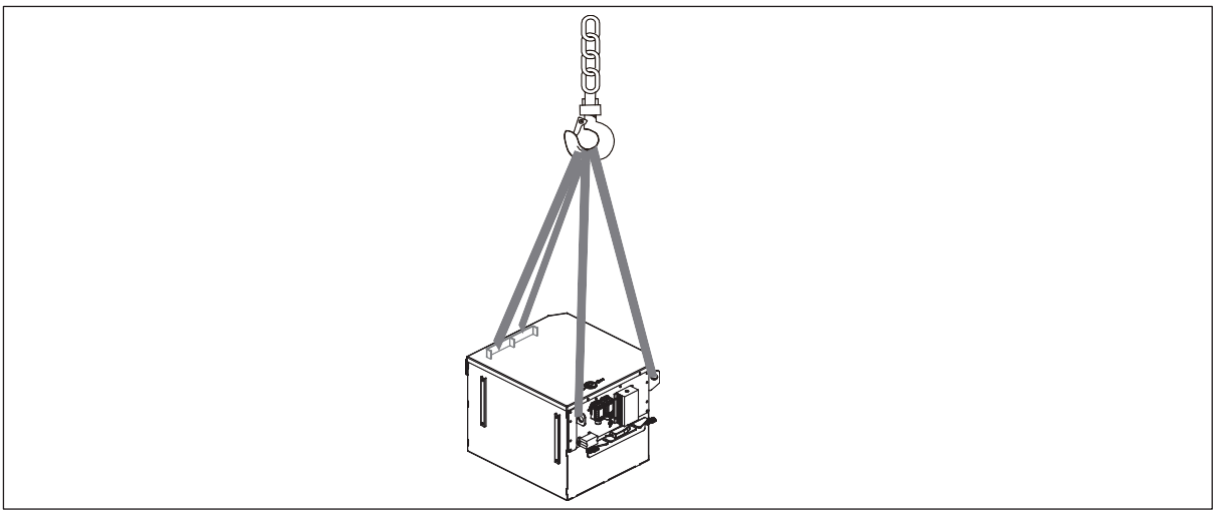

4.9 Removing or installing the battery

When moving, installing, or removing the battery, do the following:

- Ensure the service area is equipped with the proper tools designed for moving industrial batteries, such as a conveyor or overhead hoist.
- Use lifting hooks that have safety latches and are the correct size.
- Use a specialized attachment device, such as an insulted spreader bar, to install the lifting device to the battery. The width of the spreader bar must be the same as the width of the battery, to prevent damage to the battery.
- Chain hoists must be equipped with containers to accumulate any excess lifting chain.
- Keep all tools and other metal objects away from the battery terminals.
- Only authorized personnel familiar with handling industrial batteries move, store, install, or remove the battery.
- Use insulated tools and lifting equipment only.
- If installing a new battery, check the battery for damage before installing.

⚠ WARNING

Risk of short-circuits during removal and installation of the lithium-ion battery.

Battery cables can be trapped or severed when lifting out the battery. If the contactor inside the lithium-ion battery is closed in the event of a fault, the battery voltage exists between the battery terminals. This presents a risk of short-circuits (live parts).

The short-circuit produces a high electric current. This current can lead to dangerous current flows through the body, burns or electric arcs.

- *Only have the lithium-ion battery installed and removed by authorised maintenance personnel.*
- *Remove any rings, metal wristbands etc.*
- *Wear personal protective equipment (e.g. safety gloves, safety shoes, hi-vis jacket, hard hat).*
- *Position the battery connector, plus and minus cables such that they cannot be trapped or severed.*
- *Do not place any objects or tools on the lithium-ion battery to avoid short-circuiting the battery.*

⚠ WARNING

Risk of crushing during removal and installation of the lithium-ion battery.

Due to the weight of the battery, there is a risk of crushing of the arms and legs when removing or installing the lithium-ion battery.

- *Only have the lithium-ion battery installed and removed by authorised maintenance personnel.*
- *Remove any rings, metal wristbands etc.*
- *Wear personal protective equipment (e.g. safety shoes, hard hat, hi-vis jacket, protective gloves).*
- *Park the truck securely on level ground before installing or removing the lithium-ion battery.*
- *In exceptional circumstances (e.g. defective brake), place wedges underneath the wheels to prevent the truck from rolling away.*
- *Do not place any parts of the body between the lithium-ion battery and the truck or ground.*
- *Note the centre of gravity of the battery.*
- *Only use crane lifting gear with sufficient capacity when replacing the battery.*
- *Use only approved battery replacement devices (e.g. battery roller stand, battery replacement station).*
- *Insert battery retainers after installing the lithium-ion battery in the battery compartment.*
- *Check that the battery is securely seated in the battery compartment.*

4.10 Instructions for disposal

- Lithium ion batteries must be disposed of in accordance with the relevant environmental protection regulations.
- Used cells and batteries are recyclable economic goods. In accordance with the mark showing a crossed rubbish bin, these batteries may not be disposed of as domestic waste. Return and / or recycling must be ensured as required by the Batteries Legislation.
- The method of battery recovery and reuse can be discussed with our company.
- We reserve the right to change the technology.

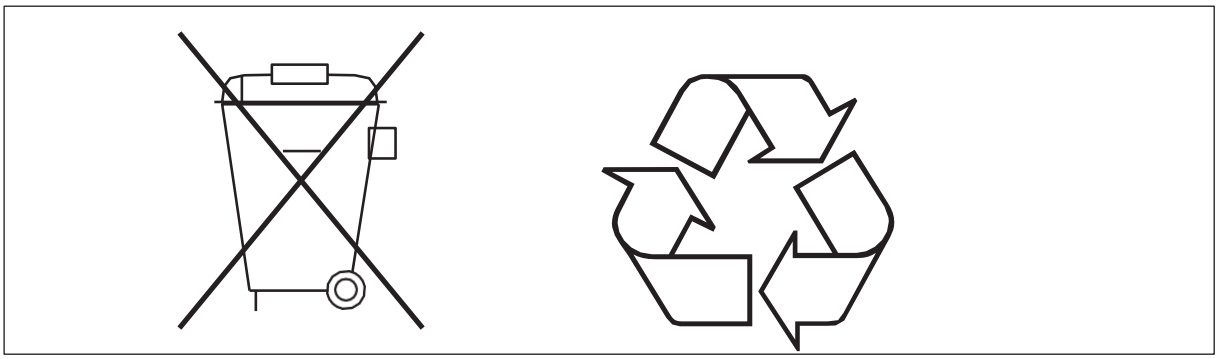

4.10.1 The requirements of recycling

- Only authorized EP dealers who have attended the after sales training, are authorized to do repairs on EP batteries.
- All Li-ion battery should be placed in safe place according to the EP Li-ion battery Manual;
- The transport of Li-ion battery must meet local regulation, EP will supply UN38.3 and MSDS files according with UN and ADR regulation;
- The package of Li-ion battery before delivery must meet the UN 3480 or local carrier regulation;

4.11 Storage

Before a long period of inactivity, the battery must be fully charged.

- We recommend that batteries are stored at a height between 60 and 120 cm. EP recommends storing lithium-ion batteries in a raised rack or shelf that allows for protection from possible collision damage.
- Store the battery in a dry place at a temperature between 0 and 40℃ and a maximum humidity of 85%. Lithium-ion batteries should be stored indoors, away from heat sources and direct sunlight, and in a well-ventilated;
- When storing a battery for an extended period, inspect it regularly (every 1 months) and maintain a charge level of 50% or greater.
- Disconnect the lithium-ion battery from the truck if it is to remain unused for longer than a week (e.g. detach the battery connector / interface connector).

⚠CAUTION

Discharge can damage the battery

If the battery is not used for a long period of time, it can become damaged through discharge.

⚠WARNING

Do not store the faulty or discarded battery for a long time;

⚠WARNING

No load bearing, squeezing and contact stacking when storing the batteries;

⚠DANGER

Do not place the batteries near cargo warehouses or near flammable and explosive dangerous goods.

4.12 Cleaning

The manufacturer recommends to only use compressed air at less than 207 kPa (30 psi) or a slightly damp towel to clean the battery. The battery, or its charging station, may be equipped with fans, heat sinks, or other cooling devices that require periodic cleaning. Always know and follow the battery manufacturer's recommendations for cleaning and service.

5 Troubleshooting

5.1 Common Problems and Solutions

During the use and maintenance of the lithium-ion battery, the battery or battery system may have one or more of the following abnormal conditions, please organize the professional engineers and technicians to perform the necessary processing according to the instructions in this manual; if you have any questions about the status or solutions, please contact ep dealer or after-sales service department of the company to obtain professional technical support.

- If the battery is found to have abnormal mechanical characteristics such as swelling, cracked casing, melted casing, and distortion of the casing before and during installation, stop using the battery immediately, place it in open and well-ventilated space, and contact the after-sales service.
- If abnormalities such as looseness, cracks, cracks in the insulation layer, burn marks, etc. of the battery's pole pressing bolts, conductive strips, main circuit wires and connectors are found before and during the installation, stop using the battery immediately, check the reason for analysis and give it a fix;
- If the polarity of the positive and negative terminals of the battery is found not match the polarity identification before installation, please stop using the battery immediately and contact the after-sales service department to replace the battery or obtain other solutions;
- If the battery is found to emit smoke or fire:

5.2 Emergency measures for battery pack smoke or fire

5.2.1 Overheating warning

- When the battery temperature is higher than 60°C, the battery reports the fault code: 17A104 (for batteries with round gauges). The driver should end the operation, drive to a safe area, open the protective cover and expose the battery to cool down; the cooling area should be equipped with fire extinguisher.
- When the battery temperature is higher than 65°C, the battery reports fault codes: 17A040, 17A041, 17A042, 17A043, 17A044, 17A045, 17A181 (for batteries with round gauges) depending on the locations of the high temperature. The driver should end the operation, quickly evacuate the crowd, open the protective cover and expose the battery. Also prepare a fire extinguisher and water, ready to respond to abnormal battery problems.

5.2.2 Smoke and fire burning and exploding

- When the battery smokes, please notify personnel to leave the faulty vehicle quickly and immediately implement power-off operation and use carbon dioxide or dry powder fire extinguisher to cover the battery with oxygen isolation. Then move the faulty battery to an open area according to the site conditions and repair or recycle the battery. If you meet complex problems, please call the after-sales service for advice.
- To deal with batteries with open flames, operators should also immediately power off the batteries and use carbon dioxide or dry powder fire extinguishers to suppress the fire as well as water-based extinguishers to cool it down. Place in an open area at least 5 meters away and repair or recycle as appropriate. In accordance with the relevant regulations of the environmental protection department, the damaged battery must be recycled within 5 days.

- For vehicles with people trapped in the fire, adhere to the principle of "saving people first, scientific rescue" and carry out simultaneous demolition, fire-fighting and rescue operations.
- Depending on the site environment and the fire, judge whether to carry out a stabilization operation on the vehicle on fire, and if possible, use other forklifts to move the burning forklift to an open area.
- Use a fire-filtered integrated gas mask or air breathing apparatus, as appropriate, to provide respiratory protection to trapped personnel.
- When the fire cannot be effectively controlled, fire blankets and other equipment can be used to protect the trapped personnel to avoid injury to the greatest extent possible, and to quickly use breaking (breaking process is strictly forbidden to blindly penetrate the battery pack, cutting, prying open operations to avoid increasing the fire and electric shock), lifting and other life-saving equipment to launch rescue operations.
- Firefighters should extinguish fires in vehicles where no personnel are trapped at a distance of 10 to 15 meters from the vehicle on fire.
- When protective components are usually present around the battery pack and the whole vehicle after adaptation, and it is difficult to spray directly to the point of ignition. A large amount of water should be used to cool the exterior of the battery pack sufficiently to prevent the spread of fire.
- Move the damaged battery to an open and safe area and evacuate the surrounding area quickly, to reduce the spread of damage to people and property.
- Due to the flammable and polluting nature of electrolyte fumes and vapors, keeping away from people also serves to reduce secondary hazards caused by starting fires.
- Quickly remove combustible materials near a battery that has spontaneously combusted to avoid causing a wider fire.
- If permitted, the battery pack can be removed from the vehicle and buried directly into the earth or sand to prevent the battery from re-igniting and exploding and to prevent the spread of smoke and dust. And a large amount of water should be used for cooling. If not permitted, the battery should be continuously cooled down by water spraying after the open fire is extinguished until the battery temperature drops below 60°C and the risk of re-ignition and explosion is assessed before the rescue operation can be stopped.

Lithium-ion batteries typically require no maintenance. If needed, any service or maintenance should be performed by a certified technician.

ZL80230-78
(80 V | 230 Ah)

Lithium-ion battery

Operation Manual

V1-07/25
(en-EN)

Foreword

Thank you for buying our products.

The manual will show you the way of correctly using the battery as well as relevant preventive maintenance and safety operation. The battery should be operated only by well-trained professionals and by no means by non-working personnel. Operators are supposed to read through the manual before actually operating the battery.

Explanations on the manual

With the continuous upgradation and improvement of our company's products, you may find a slight difference existing between your carrier and some introductions in the manual.

All the information, specifications and illustrations in the manual are effective in times of printing and our company maintains the right to modify the specification (s) or design (s) of our products at any time without any beforehand notification.

Relevant documents (e.g. operating instructions)

Depending on the application, other operating instructions (e.g. truck, battery charger) may have to be observed when operating the lithium-ion battery.

The execution, operating, warning and safety instructions in these operating instructions must be observed and complied with at all times to prevent personal injury and material damage.

Observe additional device-related provisions and regulations.

Safety notices and text mark-ups

Safety instructions and important explanations are indicated by the following graphics:

⚠ DANGER

Means that failure to comply can cause risk to life and/or major damage to property.

⚠ WARNING

Please strictly adhere to these safety instructions to avoid personal injury or major damage to equipment.

⚠ CAUTION

Please pay attention to the important safety instructions.

i NOTE

Pay attention to Instruction.

Table of content

Pg.
1 General 1
1.1Lithium-ion battery Introduction 1
1.1.1Proprietor responsibilities 1
1.1.2Intended use 1
1.1.3Permissable operating conditions 2
1.1.4Reasonably foreseeable misuse 2
1.1.5Accessories 2
1.1.6BMS (Battery Management System) 2
1.1.7Battery Usage Guidelines and Manufacturer Compliance 3
2 Lithium-ion battery description 4
2.1Performance data for lithium-ion battery 4
2.1.1Battery nominal data 4
2.1.2Information for battery and charger 5
2.1.3BMS nominal data 5
2.1.4Charger nominal data 6
2.1.5BMS nominal data 6
2.2Battery featuring circular meter 8
2.3Nameplate 9
2.3.1Nameplate 9
2.3.2Identification points 10
2.4Information on the conformity of lithium-ion batteries: 11
2.5Battery lifetime and maintenance 11
2.5.1Optimize Battery Life 11
2.5.2Maintenance table 12
3 Safety 14
3.1It is necessary to respect the following guidelines 14
3.2Warning Indications 16
3.2.1Labelling for Lithium-ion battery maintenance instructions 17
3.3Potential hazards 19
3.3.1Physical damage: 19
3.3.2Short circuits: 19
3.3.3Temperature effects: 19
3.3.4Examples of where to store a non-functional battery 19
3.3.5Fire hazard 19
3.3.6Material discharge 20
3.4Touch voltage hazard 21
4 Operation 22
4.1Lithium-ion battery routine inspection 22
4.2Instructions on faulty batteries inspection 22
4.3Checking batteries for signs of malfunction 22
4.4Hazard of faulty or discarded battery and recycle 24
4.5Commissioning 25
4.6 Charging 25
4.6.1Charging the battery 27
4.6.2Discharging the battery 28
4.7Transportation 29
4.7.1Shipping faulty batteries 29
4.8Lifting by crane 30
4.9Removing or installing the battery 31
4.10Instructions for disposal 32

Table of content

Pg.
4.10.1The requirements of recycling 32
4.11Storage 33
4.12Cleaning 33
5 Troubleshooting 34
5.1Common Problems and Solutions 34
5.2Emergency measures for battery pack smoke or fire 34
5.2.1Overheating warning 34
5.2.2Smoke and fire burning and exploding 34

1 General

1.1 Lithium-ion battery Introduction

Lithium-ion (Li-ion) batteries have many advantages over traditional lead acid and other types of batteries. EP's Li-ion batteries are classified as LFP 'Lithium Iron Phosphate' or LiFePO4. The lithium-ion battery unit is composed of battery cells in series or in parallel; It is equipped with battery management system for monitoring and protecting the lithium-ion battery; The different or the same electrical connector design for charging and discharging; The circular meter shows data, error code, total voltage and temperature, ect. When stored, handled, and used properly, they also have a longer service life than other batteries have a higher power density, don't need a cooling down period, and can be opportunity charged. EP's priority is safety and establishing the following safety procedures for storing, handling and use of these batteries will help prevent fires and explosions. Companies training employees to recognize the hazards of Li-ion and other types of batteries as well as how to handle, store and manage them properly will help to avoid damage to the batteries resulting in possible fires and explosions.

This battery should not be used at a very low SOC (state of charge) status. To ensure the battery life, should avoid the discharge depth of more than 80% of the rated capacity of the battery. Whether it is partially discharged or fully discharged, the battery should be immediately charged.

Lithium batteries have a special charger and may not be charged with other types of battery chargers, so as not to charge lithium batteries. The new factory battery should not be discharged, it must be fully charged before use.

1.1.1 Proprietor responsibilities

For the purposes of these operating instructions, the "owner" is defined as any natural or legal person who either uses the lithium-ion battery himself, or on whose behalf it is used. In special cases (e.g. leasing or renting), the owner is considered to be the person who is to carry out the specified operational duties in accordance with existing contractual agreements between the proprietor and operator of the lithium-ion battery.

The owner must ensure that the lithium-ion battery is used only for the purpose for which it is intended and that dangers to life and health of the operator or third parties are excluded. Furthermore, accident prevention regulations, safety regulations and operating, servicing and repair guidelines must be followed. The owner must ensure that all operators have read and understood these operating instructions.

1.1.2 Intended use

- Powering electric forklifts for material handling and logistics operations.
- Providing reliable energy storage for prolonged usage in warehouse environments.
- Enhancing efficiency and productivity in industrial settings.
- Facilitating indoor and outdoor material transportation tasks.
- Supporting sustainable operations through reduced emissions and maintenance requirements.

i NOTE

Please note that using our lithium-ion batteries for purposes other than those specified above may compromise performance and safety. For inquiries regarding the intended use of our lithium-ion batteries for electric forklifts, please contact our After-sales service department.

1.1.3 Permissable operating conditions

The lithium-ion battery is intended exclusively for use in industrial trucks specified and approved by the manufacturer. Any other use beyond the scope of the above is not appropriate. The owner or user of the lithium-ion battery alone shall be liable for any damage arising from the above. Furthermore, any liability and warranty claims shall be rendered null and void.

- Operational application temperature 0° C-40° C, humidity ＜ 80%;
- Charging application temperature 5° C-40° C;
- The battery's maximum operation altitude is up to 2000m;

i NOTE

Lithium-ion battery working temperature is divided into charging temperature requirement and discharging temperature requirement:

The charging temperature range is 0°C-40°C. A high-rate recharging operation below 0°C may lead to battery damage, so we recommend temperature range is 5°C-40°C;

The discharging temperature range is -20°C-60°C. If used in low temperature°C-20°C-0°C, battery discharge capacity will be smaller compared with the one in normal temperature condition, which is normal; battery used between 40°C-60°C in the long run will accelerate the aging of the internal material. It may shorten the service life of battery, so not recommended. So we recommend working temperature is 0°C-40°C.

1.1.4 Reasonably foreseeable misuse

- Never short circuit the battery terminals.
- Do not reverse the battery polarity.
- Do not overcharge.

1.1.5 Accessories

Do not use a charger that is not released by EP for lithium-ion battery.

1.1.6 BMS (Battery Management System)

- The EP battery management system (BMS) for a lithium-ion battery is crucial for the safety and performance of the system. Here are the most important features and functions:
- Current, voltage and temperature monitoring: the BMS continuously monitors the charging current, battery voltage and temperature of the cells, as well as the individual modules, during the charging and operating cycle.
- Differentiation for cells and modules: The BMS can differentiate between the individual cells and modules and monitor and control individual parameters for each cell or module to ensure even utilization and optimum performance.
- Safety shutdown: If safety limits are exceeded, such as critical temperatures, currents or voltages, the BMS safely shuts down the system to prevent damage to the battery and ensure safety.
- Output of error codes with corresponding action: The BMS recognizes errors and outputs corresponding error codes. Depending on the severity of the fault, the BMS can take measures such as issuing warning messages or switching off the system.
- Permanent communication with the vehicle's CAN bus: The BMS communicates continuously with the vehicle's Controller Area Network (CAN) bus to exchange important data and ensure that the BMS and other vehicle systems work in a coordinated manner.

- Integrated telemetry system (optional): In certain EP vehicle types, a lithium-ion battery is equipped with an integrated telemetry system. This system records and transmits important battery operating data, such as cell voltages, temperatures and currents. This telemetry data can be accessed online and enables real-time monitoring and analysis of battery performance.

1.1.7 Battery Usage Guidelines and Manufacturer Compliance

The use of batteries must strictly follow the manufacturer's instructions. Any modification to lithium batteries or their safety devices is strictly prohibited unless prior written approval is obtained from our company. Only original spare parts ensure compliance with the manufacturer's quality management standards. Our company shall not be liable for any vehicle malfunctions or accidents caused by the use of non-original spare parts. For more details, please refer to the lithium battery warranty agreement and relevant contract terms.

2 Lithium-ion battery description

2.1 Performance data for lithium-ion battery

2.1.1 Battery nominal data

Battery cell		
1	Cell material	LFP
Battery system		
2	Burst mode	parallel circuit or series circui
3	Ambient relative humidity	≤80%RH
4	Operational application temperature	0-40℃

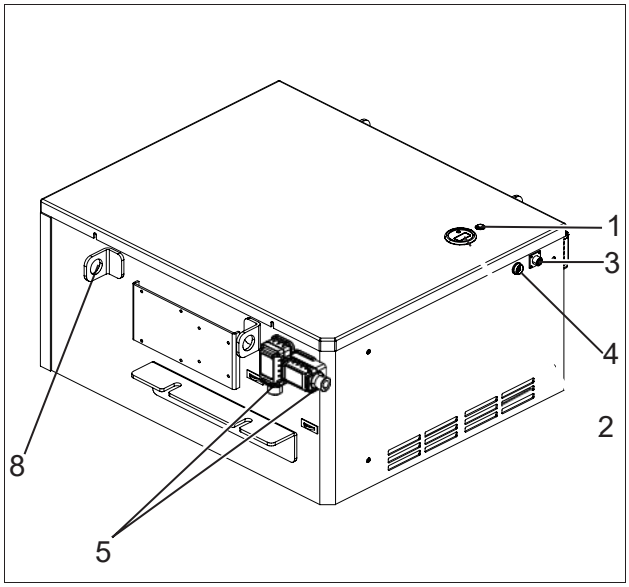

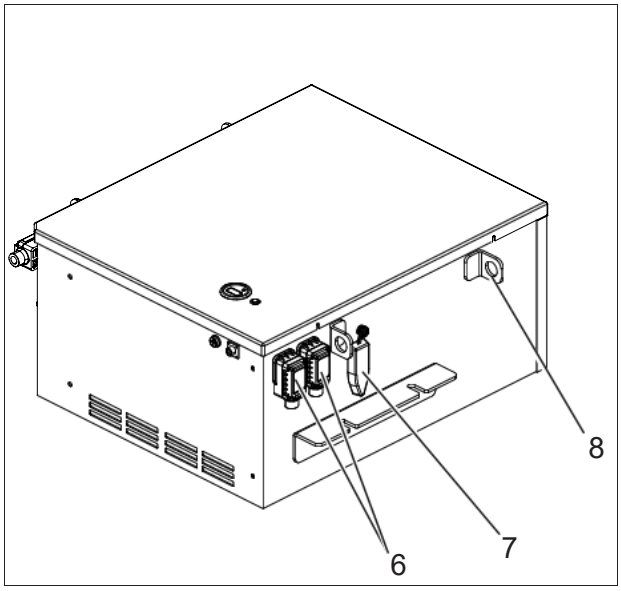

Item	Description	Function
1	On/off button	Start up or cut off the lithium-ion battery
2	Circular meter	Show information of lithium-ion battery. (refer to chapter 5 Battery indicator)
3	Charging communication	Charging communication management
4	Discharging communication	Discharging communication management
5	Discharging plug	Discharge the capacity of the lithium-ion battery.
6	Charging plug	Charge the lithium-ion battery via the charging plug connect to the charger plug.
7	GPS	Telematics
8	Handle	Sling point

2.1.2 Information for battery and charger

Battery type	Vlotage/Rated capacity	Dimensions	Weight	Charger
ZL80230-78	80V/230AH	739*730*346	162kg±5kg	60A/100A

2.1.3 BMS nominal data

Battery cell		
1	Cell material	LFP
2	Nominal Voltage	3.2V
3	Voltage rang	2.6V~3.65V
Battery system		
1	Battery box size	739*730*346
2	Weight	162kg±5kg
3	Group method	Series-parallel connection method
4	Rated voltage	76.8V
5	Rated capacity	230Ah@25℃ 1C discharge
6	Voltage rang	60V~87.6V
7	Total enery	17.664 kWh
8	Rated charging current	115A
10	Rated discharge current	200A
11	Maximum continuous discharge current	400A
13	Ambient relative humidity	≤80%RH
14	Standard discharge temperature range	-20℃~ 60 ℃ (discharge)
15	Standard charging temperature range	0℃~ 55 ℃

2.1.4 Charger nominal data

1	Adaptive voltage	65-90V
2	Output current	100A
3	Output voltage	380±15%
4	Output voltage	65V~90V
5	Output power	9kW
6	Protected mode	Input overvoltage protection, input undervoltage protection, output overvoltage protection, output overcurrent protection, short circuit protection, product overtemperature protection, battery reverse protection, battery open circuit protection
7	Communication function	CAN communication
8	Charging port	REMA320 interface
9	Way to install	Safety fixed
10	Display	instrument
11	Mechanical life	10000 times
12	Operating temperature	-10℃ ~40℃
13	Operating humidity	30%RH~50%RH

2.1.5 BMS nominal data

BMS management system function			
No.	**Item**	**Function**	**Function description**
1	Inspection/ estimates	Monomer voltage detection	Accurate acquisition of all cell voltage data
2		Total voltage detection	Accurate acquisition of total voltage data
3		Temperature collecting	Accurate detection of battery temperature
4		Current inspection	Accurate detection of charge-discharge currents
5		SOC Estimate	Hall sensor is used to obtain the input and output current of the battery, and the SOC estimation of the battery is carried out by the method of Ampere-time integration
6	Communication function	CAN communication	Communication and Debugging

7	Protection function	Short-circuit protection	Power circuit short circuit, contractor disconnect
8		Over current protection	Over current occurs, contractor disconnect
9		Over charging protection	Over charge occurs, contractor disconnect
10		Over discharging protection	Over discharge occurs, contractor disconnect
11		Over temperature protection	Over temperature occurs, contractor disconnect
12	Sleep wake	Sleep awakening function	charge communication wake-up, battery switch button wake-up

BMS specification parameters			
No.	Item		Remark
1	Working voltage range	62.4V~87.6V	Selection
2	Normal power consumption	10mA	stable
3	Detection number of series	24 series	Selection
4	Temperature detection points	6PCS	Selection
5	Measurement range of cells voltage	2.4V~4.5V	Selection
6	Measurement accuracy of cell voltage	±10mV	Selection
7	Current detection accuracy	±1A	Selection
8	Electricity display accuracy	±1%	stable
9	Temperature range	-45~100℃	Selection
10	Temperature measurement accuracy	±1 ℃	Selection
11	Equalizing current	90mA	Selection
12	Communication functions	CAN	Selection
13	low power consumption	20uA	stable
14	Working environment temperature range	-20℃~ 60 ℃ (discharge)	stable

2.2 Battery featuring circular meter

No.	Name	Description
1	Energy display	When all 10 cells are on, it indicates that the battery is full; When the first cell and the second flash alternately, it indicates that the battery is low and must be charged. The battery remaining charge is displayed; “100%” indicates that the battery is fully charged.
2	Total voltage	The sum of the total voltages of the lithium battery series (normal voltage rang of total voltages of the battery2.5~3.65V*15 for 48V 2.5~3.65V*24 for 80V)
3	Temperature	Battery temperature
4	Charging current	Current value when charging the lithium battery
5	Maximum cell voltage	Maximum value of cell voltage, (normal voltage rang of the cells of the battery2.5~3.65V)
6	No. of cell	Identification No. of the cell with maximum voltage.
7	Minimum cell voltage	Minimum value of cell voltage (normal voltage rang of the cells of the battery2.5~3.65V)
8	Cell No. of minimum cell voltage	Identification No. of the cell with minimum voltage.
9	Fault code	If the battery fails, the fault code will be displayed

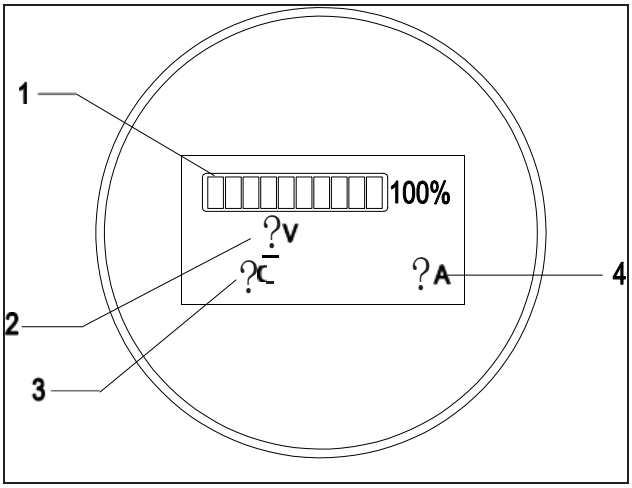

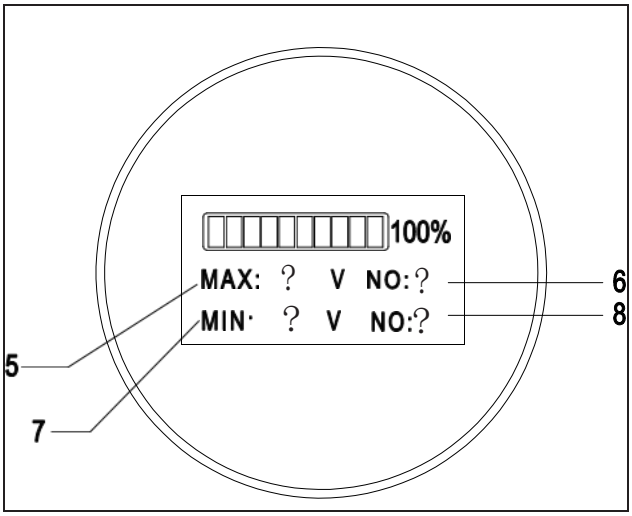

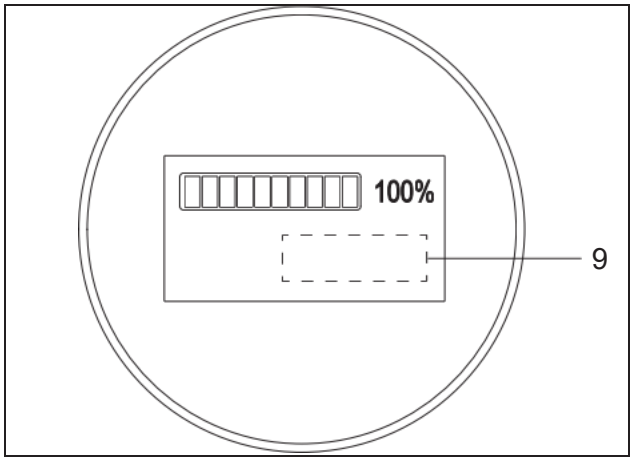

2.3 Nameplate

2.3.1 Nameplate

Item	Description
1	Battery name
2	Battery designation
3	Battery model
4	Serial number
5	Manufacturer
6	Address
7	Manufacturing date
8	Battery weight
9	Nominal voltage
10	Nominal energy in Watt hours
11	Recommended charge voltage
12	Warning Indications(see section 3.2）
13	Recycle sign(see section 4.9）

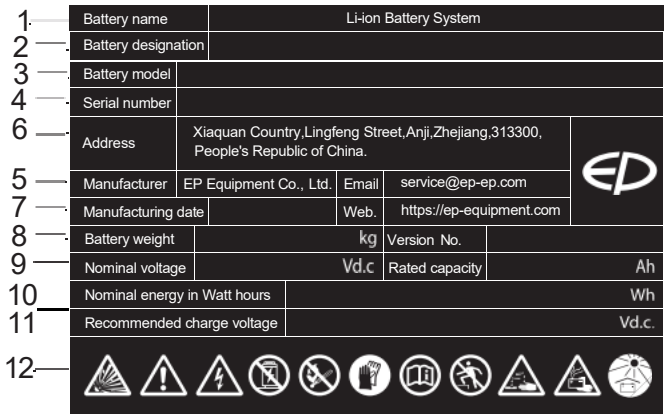

NOTE

The label position is subject to the actual lithium-ion battery.

2.3.2 Identification points

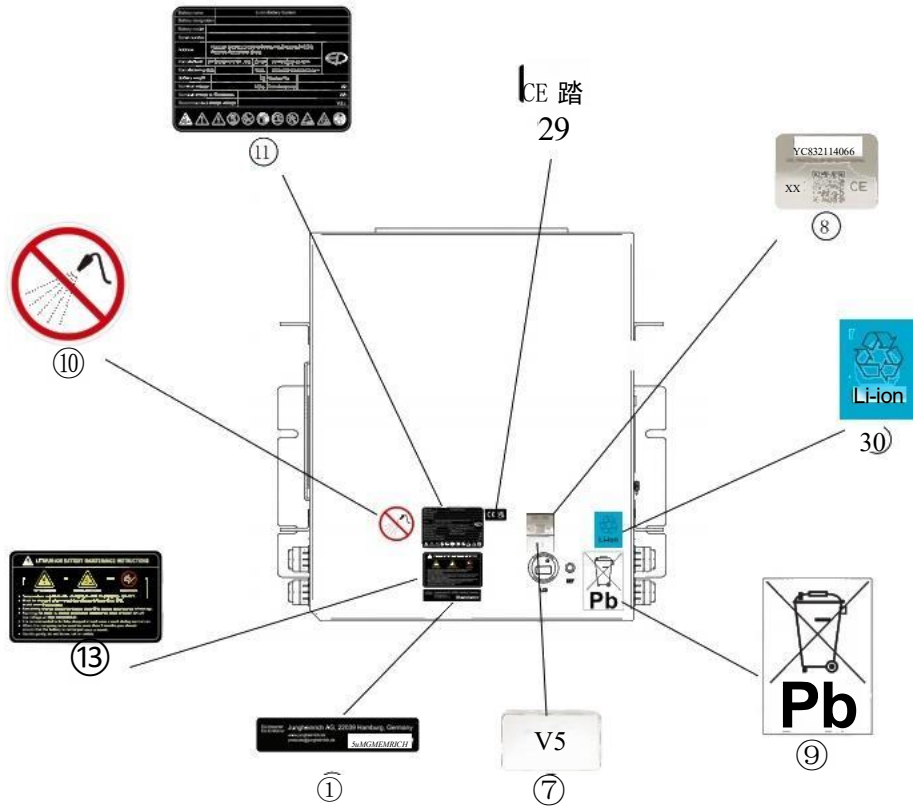

Item	Description
1	Jungheinrich information label
7	Version label
8	Remote link QR code label
9	Pb battery classification collection labels
10	No spraying labels
11	Lithium-ion battery label
13	Nameplate for lithium-ion battery usage and maintenance instructions
29	CE/UKCA label
30	LI-ION battery recycling label

2.4 Information on the conformity of lithium-ion batteries:

1) Regulation (EU) 2023/1542 in Articles 6, 10 and 13.
2) Directive 2011/65/EU including amendment (EU)2015/863 in the latest valid version.
3) EMC Directive 2014/30/EU in the latest valid version in the harmonised standards EN 12895:2015+A1:2019, EN IEC 61000-6-2:2019 and EN IEC 61000-6-4:2019.
4) The harmonised standard EN 62619 in the latest valid version and to the harmonised standard EN 1175:2020 Annex C.2 as energy sources for industrial trucks.
5) If a radio system is installed, we declare that it complies with the RED Directive 2014/53/EU.

2.5 Battery lifetime and maintenance

2.5.1 Optimize Battery Life

Always use and follow the battery management system (BMS). The BMS is the electronic system that monitors battery data and use that data to its operating environment to influence the battery's safety, performance, and service life. It also functions as a safety cut-off device in case of overcharging, overcurrent, or overheating. Lithium-ion battery life is greatly reduced
if used outside a temperature range of 0ºC to 40ºC (32ºF to 104ºF) or in an environment with greater than 85% humidity. EP recommends to opportunity charge lithium-ion batteries. This is when the battery is recharged for short intervals during a shift period. It reduces or eliminates the need for long charging periods, changing batteries during a shift, and extending shift periods.

2.5.2 Maintenance table

No.	Maintenance content	Method of operation	Note	Frequency
1	Check if battery capacity is too low	Check instrumentation SOC display	Make sure the battery is not stored without charge for a long time. If the battery system needs to be put on hold for a long time, it is best to keep the battery in half power state and charge the battery every 2 months.	Everyday
2	The battery pack charge and discharge current(if necessary)	Check instrumentation display	Make sure battery pack charge and discharge current meet meet requirements	Everyday
3	Check the voltage and temperature of a lithium battery(if necessary)	Check instrumentation display	Make sure battery pack charge and discharge current meet meet requirements	Everyday
4	Connector pins at the bottom of the battery(if necessary)	Perform a visual inspection	If any ablation or deformation occurs in daily inspection, the battery connector pins should be replaced in time.	Everyday
5	Check whether the appearance is deformed, whether the surface is oxidized, paint removing, the mounting position is offset, and the cabinet is damaged;	Perform a visual inspection	check the reason for analysis and give it a fix	Everyday
6	Check the entire battery as well as the surface beneath it for signs of fluid leakage.	Perform a visual inspection	check the reason for analysis and give it a fix	Everyday

No.	Maintenance content	Method of operation	Note	
7	Clean the lithium battery and charger(if equipped) with a dry cloth or compressed air.	Perform a visual inspection, Wear insulated gloves and shake it gently	Make sure it tight	weekly
8	Whether the external wiring harness has worn, imprint, creases and exposed line core	Perform a visual inspection	Make the wiring harness fixed well	weekly
9	Check that the surface of lithium-ion battery	No dust, no water, no corrosion, oxidation, rust, etc.	Clean surface if you found dust, corrosion, oxidation, rust by using dustless cloth or air compressor ,water battery is strictly prohibited to use	weekly
10	Check that the outside screws of the battery are fastened	Torque wrench correction requires no loosening	Reinforce screws	weekly
11	Check for water or foreign matter in the plug and socket and check for rust or charring(if necessary)	Perform a visual inspection	check the reason for analysis and give it a fix	Monthly
12	Check the cable for damage and loose joints(if necessary)	Perform a visual inspection	check the reason for analysis and give it a fix	Monthly
13	Check the battery case for abnormalities such as cracks, deformation, and bulging.	Perform a visual inspection	check the reason for analysis and give it a fix	Monthly

3 Safety

3.1 It is necessary to respect the following guidelines

- The battery is not used at a loss of power. To ensure the battery life, should avoid the discharge depth of more than 80% of the rated capacity of the battery. Whether it is partially discharged or fully discharged, the battery should be immediately charged.
- Lithium-ion batteries have a special charger, may not be charged with other types of battery charger, so as not to charge lithium batteries
- The new factory battery should not be discharged, it must be fully charged before use.
- Only trained and authorized personnel are permitted to charge, service and replace the batteries.
- Do not place lithium-ion batteries on or near flames or hot heat sources (> 65°C). This may cause the batteries to overheat or burst into flames. This type of use also impairs the performance of the batteries and reduces their service life.
- It is forbidden to take out the battery in the charging state.
- It is forbidden to use and store the battery at low power (the use and storage of power loss will cause the early loss of battery system capacity and accelerate the service life of the battery pack);
- It is forbidden for unqualified personnel to dismantle and overhaul the battery system and supporting charger and other devices; the battery system is a dangerous product, and maintenance and replacement can only be performed by professionals;
- Do not hit, throw or trample on the battery, do not heat the battery, do not throw the battery into the water.
- Use carbon dioxide or dry powder fire extinguishers if the battery harness smokes and ignites. If the battery is on fire, use a high-pressure water gun to extinguish the fire at a long distance.
- If the connection of the battery pole is found to be oxidized, wipe it with a dry cloth and polishit with a fine sandpaper before use. Otherwise, it may cause poor contact and the function fails.
- Prohibit the use of strong static electricity and strong magnetic field, otherwise easy to damage the battery safety protection device, bringing security risks.
- Do not use this series of products with other models or types of batteries in series or in parallel; prohibit the entire system with lithium-ion battery protection circuit board or battery management system, the power system in series or in parallel operation, if necessary, please contact this Company technical department to obtain the correct technical support.
- When charging and discharging Try to avoid splashing water or other conductive objects on the battery cover and pole, such as exposure to heavy rain.
- Once inadvertently make some kind of conductor come into contact with the positive and negative poles of a single battery or battery pack at the same time to cause a short circuit, be sure to disconnect the circuit which causes the short circuit in the shortest time.
- Risk of fire or smoke: LFP batteries can leak / evaporate or decompose and release flammable electrolyte under the condition of 150 ℃ if they are improperly used or affected by the environment. Hydrogen fluoride (HF) and phosphorus oxides may form during fire, and chemical reactions between LIPF6 and water in the electrolyte will produce fluoride and carbon dioxide.

- Contact with eyes: Electrolyte inside the battery will cause eye irritation and inadvertent contact. Please do not rub it. Rinse immediately with plenty of water for at least 15 minutes. If necessary, please go to the hospital for treatment immediately. Otherwise it will hurt your eyes.
- Contact with skin: The electrolyte inside the battery may cause skin infections, inadvertent contact, take off contaminated clothing and wash the infection with plenty of water and soap for at least 15 minutes, do not rub the ointment.
- Inhalation: When the battery is leaked or ruptured, the internal components of the battery may cause mucus, edema and other respiratory tract problems, inadvertently inhaled, to fresh air and ventilated contaminated area. If necessary, oxygen or artificial respiration.
- Special Protection Tools: Use breathing apparatus to avoid inhalation of irritating gases. Wear protective clothing or other devices to prevent body contact with the electrolyte.
- Using lifting and delivery devices as specified. Prevent the battery cell, interface and connection cable from being damaged by the lifting hook!
- This lithium-ion battery may not be approved for your specific forklift. Only use a lithium-ion battery,if it has been approved by he forklift manufacturer for your forklift. The lithium-ion battery shall only be handled by trained and authorized personnel.

⚠ DANGER

Failure to comply with these safety instructions can result in fire and explosion or the leakage of harmful materials.

⚠ WARNING

Should such issues as failing to abide by the operation manual, failing to use the original parts for maintenance or damaging caused by users themselves occur, the quality guarantee will be invalid automatically!

⚠ DANGER

Electrical danger

Only the After-Sales Service Centre technicians can open the battery.

3.2 Warning Indications

Follow the operating instructions and keep them in a visible position near the battery charger. If any faults are found on the lithium-ion battery,immediately take it out of service and contact the manufacturer's customer service department.

Always wear protective clothing (e.g. safety goggles and safety gloves) when working on cells and batteries!

- No smoke and fire!
- Avoid the existence of open fire, fiery metal wire or sparks around the lithium-ion battery, otherwise explosion or fire disaster may occur!

- Explosion or fire disaster is likely to occur; avoid short circuit!
- Keep the battery away from all fire sources, heat sources and flammable or explosive materials!

- Avoid hot plugging!
- Dangerous voltage!
- Notice: the metal part of the battery cell is electrified, so don't place any external object or tool on the battery cell!

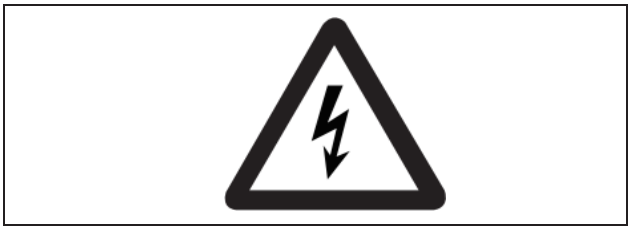

Do not place the battery on top of conductive objects!

- Don't knock over the battery!
- Using lifting and delivery devices as specified. Prevent the battery cell, interface and connection cable from being damaged by the lifting hook!
- If the materials leak out, do not inhale the fumes. Wear safety gloves!
- Always wash your hands after completing the work. Use only insulated tools.

Don't trample on the battery to prevent it from fierce shaking or shacking!

- Protect the battery from solar radiation or other forms of heat radiation.
- Do not expose the battery to any sources of heat.

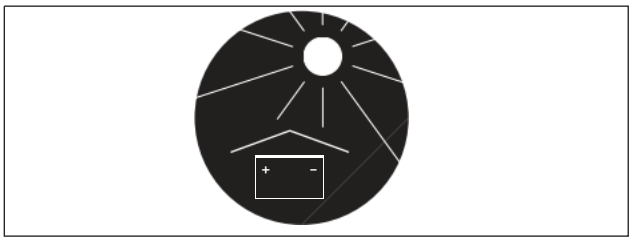

Electrolyte fluid can be discharged if the battery is physically damaged. Electrolyte fluid is harmful and must not come into contact with the skin or eyes(see section 3.3.7)

- Do not physically alter the battery, strike, crush, compress, notch, dent or modify it in any way.
- Do not open the battery, damage, penetrate, bend, heat or allow it to become hot, do not throw it on the fire, short or immerse it in or wash it with water.
- Do not drop it or allow anything to fall on it, do not store it or operate it in a microwave oven, kiln or pressure vessel etc.

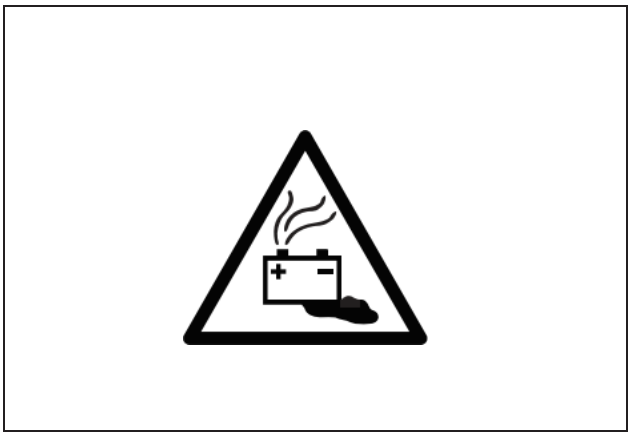

3.2.1 Labelling for Lithium-ion battery maintenance instructions

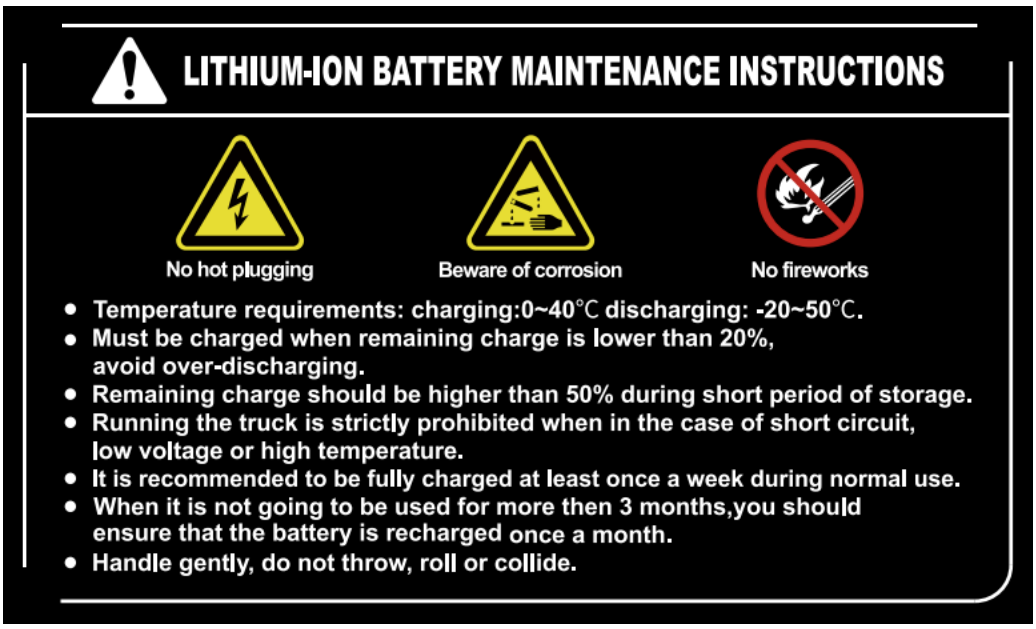

!WARNING

1.Do not use or store this truck below 20% state of charge!

2.Strictly follow the battery maintenance instructions found in the operation manual!

Item	Description
1	The use of the battery is strictly prohibited when leakage between the communication terminal at the bottom of the battery and the charging/discharging pins,or when leakage is present in the gaps around the pins.
2	The use of the battery is strictly prohibited if there are visible impact marks, cracks,or traces of damage on the battery.
3	The use of the battery is strictly prohibited if it emits pungent odors,exhibits housing swelling at the mid-joint,or shows abnormal swelling/bulging of internal cells
4	The use of the battery is strictly prohibited if the connector pins burnt,deformation,ablation

3.3 Potential hazards

- No hazards are anticipated if the equipment is used correctly.
- Do not use the equipment for anything other than its intended purpose.
- The following hazards can arise in the event of improper use:

3.3.1 Physical damage:

This can occur if a battery falls or is deformed through pressure (e.g. truck forks penetrate the battery housing).

Mechanical damage includes cracks, breakage, splinters or holes in the battery housing. This type of damage may be caused by a short circuit inside the battery,
which may result in harmful materials leaking, fire or battery explosion.

3.3.2 Short circuits:

These may be caused by connecting the two battery terminals (e.g. battery immersed in water)

3.3.3 Temperature effects:

High temperatures caused for example by sunlight or being store in warm locations (e.g. near ovens) can result in harmful materials leaking, fire.

In order to avoid fire and leakage of harmful materials, a safe place for storing batteries must satisfy the following criteria:

- Do not store in places often frequented by personnel.
- Do not store in places where valuable objects (e.g. cars) are stored.
- Fire extinguisher must be available to put out any fires.
- There should not be any fire or smoke detectors in the vicinity in order to ensure that an automatic fire detection system is only activated in the event of actual danger (e.g. naked flames).
- Small amounts of discharge from a single battery are not critical to the environment. Above-average natural ventilation is required in this case.
- No ventilation intake pipes should be in the vicinity, as discharged content could spread within a building.

3.3.4 Examples of where to store a non-functional battery

- Roofed outdoor position.
- Ventilated container.
- Covered box with pressure and smoke discharge option.

3.3.5 Fire hazard

⚠ WARNING

Physical damage, thermal effects or incorrect storage in the event ofa defect can result in fire.

Since the extinguishing of burning lithium-ion battery systems with suitable extinguishing agents extinguishing agents, the responsible fire brigade should be should be informed in advance or the company fire. Fire protection assistants should be trained accordingly.

NOTE

A suitable method is cooling down cooling with water. Accordingly the parking area and charging stations should be equipped with extinguishing facilities.

DANGER

There is a risk of fire.
Use water-based extinguishers,CO2, dry chemical fire extinguishers.

3.3.6 Material discharge

Battery electrolyte fluid can be hazardous

Electrolyte fluid can be discharged if the battery is physically damaged. Electrolyte fluid is harmful and must not come into contact with the skin or eyes.

If it does, rinse the affected parts with plenty of water and seek medical assistance immediately.

In the event of skin irritation or if any substances are breathed in, seek medical assistance immediately.

In the event of inhalation bring the affected person into the fresh air and keep them still.

Precautionary measures for personnel

- Keep personnel away and facing the wind.
- Block off the affected area.
- Ensure there is adequate ventilation.
- Wear personal protective equipment.
- If vapours / dust / aerosols are present, use self-contained breathing apparatus.

Precautionary measures for the environment

Do not allow spilled fluids to enter the water system, drainage system or the underground water.

Cleaning measures

The leaked fluid must be removed professionally by the operating company on the basis of a risk assessment and disposed of in the correct manner. The fire brigade, the Agency for Technical Relief or similar institutions must be used. Absorb residues with liquid-absorbent material (such as vermiculite, sand, universal binders and pebble grain).

3.4 Touch voltage hazard

⚠ WARNING

Touch voltage hazard!
Hazardous touch voltages may occur in the event of a technical or mechanical defect on the battery. Touch voltages also occur on seemingly discharged batteries. Touching the battery terminals or live attachments (battery cable, battery connector etc.) can result in dangerous current flows through the body. There is a risk of serious, irreversible or fatal injuries.

- Tag out the faulty battery and take out of service.
- Do not touch faulty batteries
- Do not place any objects or tools on the lithium-ion battery to avoid short-circuiting
- the battery.
- Do not short-circuit the lithium-ion battery.
- Notify the customer service department.

4 Operation

4.1 Lithium-ion battery routine inspection

△CAUTION

The following items should be checked every day.

Daily inspection items IAdditional servicing work to be performed every 1000 hours or every 6 months.	Troubleshooting
Liquid leakage and corrosion at the charging/discharging contacts at the bottom of the battery	Stop using the battery and handle in accordance with the chapter "4.3 Hazard of faulty or discarded battery and recycle".
Signs of liquid leakage at the bottom of the battery	
Case broken	
Swollen battery	
Connector pins burnt,deformation,ablation	Contact your authorised dealer to replace the contacts or Connector pins should be performed by a certified technician

4.2 Instructions on faulty batteries inspection

△DANGER

Faulty batteries may cause short circuits and lead to fires.To eliminate potential safety hazards and avoid unnecessary economic losses and other consequences,daily inspection is required,please act in strict accordance with the guidelines.

4.3 Checking batteries for signs of malfunction

Whether there is any leakage between the communication terminal and charging/discharg pins at the bottom of the battery,and in the around the pins;

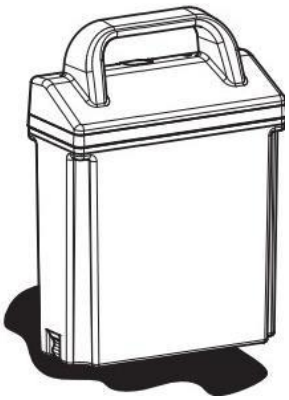

sample

Check whether there are pungent smells;
Check the middle connection of the body f
swelling of the housing or internal cells
abnormal expansion,bulge

sample

Check whether there are crack or damage
Check the battery for signs of impact and
damage.

sample

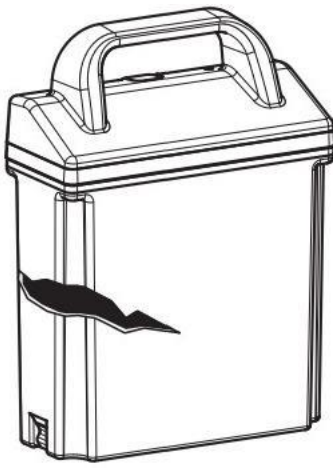

4.4 Hazard of faulty or discarded battery and recycle

Please monitor the battery status when in use and in storage. If you find any broken batteries, electrolyte leakage, abnormal expansion or pungent odors due to shipping damage or abnormal vibration, please stop use immediately and keep at least a 5 meter perimeter around the effected batteries. Please dispose of the damaged batteries properly and contact a recycling company to recycle the batteries (See chapter 10 Instructions for disposal). For batteries that are under EP warranty policy, EP will access the warranty claim according to your submission of the battery nameplate photo.

During the period waiting for disposal or recycle, please stock damaged and old batteries carefully by following instructions:

1.Damaged and discarded battery temporary storage needs to be placed in an iron or plastic container with water that can cover whole battery at least 5 days (The battery may emit smoke when immersed in water. This is the process of consuming energy by the leaking battery, which is a normal reaction) .

- Keep the container and batteries outdoors and 5 meters away from other things, especially flammable items.
- Use protective gloves when putting batteries in or out of water.
- Do not stack damaged or old batteries.

2.For big battery with inner and outer boxes structure, Keep the batteries outdoors at least 5 days. and contact a recycling company to recycle the batteries.Place the faulty batteries outdoors in an openand shaded area, this area must be well-ventilated and be equipped with fire equipment.

i NOTE

Lithium-ion batteries that are damaged or in uncertain conditions shall only be handled by special trained and authorized lithium-ion battery technican.

⚠ WARNING

Dispose of faulty or discarded batteries in time;

⚠ WARNING

Do not store faulty or discarded for a long time.

⚠ WARNING

No load bearing, squeezing and contact stacking when storing faulty or discarded temporary;

⚠ DANGER

Do not place faulty or discarded near cargo warehouses or near flammable and explosive dangerous goods.

4.5 Commissioning

⚠ WARNING

Unsuitable batteries that have not been approved by EP for the truck can be hazardous The design, weight and dimensions of the battery have a considerable effect on the operational safety of the truck, in particular its stability and capacity. The use of unsuitable batteries that have not been approved for the truck by EP, can lead to a deterioration of the braking characteristics of the truck during energy recovery, causing considerable damage to the electric controller and resulting in serious danger to the health and safety of individuals. Only EP-approved batteries may be used on the truck. Battery equipment may only be replaced with the agreement of EP. When replacing/installing the battery make sure the battery is securely located in the battery compartment of the truck. Do not use batteries that have not been approved by the manufacturer.

If damage or other defects are identified on the lithium-ion battery, the lithium-ion battery must not be used until it has been properly repaired.

Report any defects immediately to your supervisor. Tag out the faulty lithium-ion battery and take it out of service. Do not return the lithium-ion battery to service until the fault has been identified and rectified. Inform the manufacturer's customer service department or a customer service organization authorized by the manufacturer.

- Check that the equipment is complete.
- Check the lithium-ion battery for damage.
- Check the battery cables and cable connections for damage and correct seating (if present).
- Install the lithium-ion battery if necessary

4.6 Charging

When charging, make sure the battery charger is turned OFF before connecting the battery charging cables. Lithium-ion batteries allow for fast charging, if the battery does not charge completely in a normal period or if the battery management system (BMS) indicates a fault, then remove the battery from service. EP recommends to opportunity charge lithium-ion batteries.

This is when the battery is recharged for short intervals during a shift period. It reduces or eliminates the need for long charging periods, changing batteries during a shift, and extending shift periods.

The positioning of chargers offers new possibilities compared to lead-acid batteries. For instance, they can be placed in parking spaces near break rooms. Furthermore, there is no hydrogen outgassing during the charging and discharging process, which contrasts with lead-acid batteries. During the charging and discharging process, no technical measures are needed for ventilation or air circulation due to the absence of hydrogen outgassing with lithium-ion batteries. However, fire protection regulations remain consistent with those for lead-acid battery chargers, requiring a minimum distance of 2.5 meters from combustible materials.

i NOTE

The workplace regulations must be observed (emergency exits, escape routes, traffic routes, ... must be kept clear).

⚠ CAUTION

- *No metal objects should be placed on the battery.*
- *Be careful of short-circuiting the battery!*
- *No modification of the lithium-ion battery connector;*
- *Do not use irregular charging sockets;*
- *The necessary extinguisher (yellow sand and powder fire extinguisher) should be equipped around the charger so that emergency extinguishing can be carried out under extreme conditions.*
- *Do not modify or disassemble the charging port and charging equipment, which may result in charging failure and fire.*
- *After the charging is finished, do not disconnect the charging device when it is wet or standing in the water, as this may cause electric shock and cause personal injury.*
- *To avoid damage to charger cord plug and receptacle, do not pull on charger cord plug. Do not twist, rock or bend plug sideways. Do not use if plug or receptacle is damaged. Loose or feels hot otherwise fire, property damage or personal injury may result.*
- *Connect only properly grounded AC outlet. Do not touch uninsulated protion of output connector or uninsulated battery terminal. Never try to change a frozen battery. There's the danger of explosion!*

⚠ WARNING

Charging must only be performed by individuals who are fully familiar with the relevant charging safety instructions.

4.6.1 Charging the battery

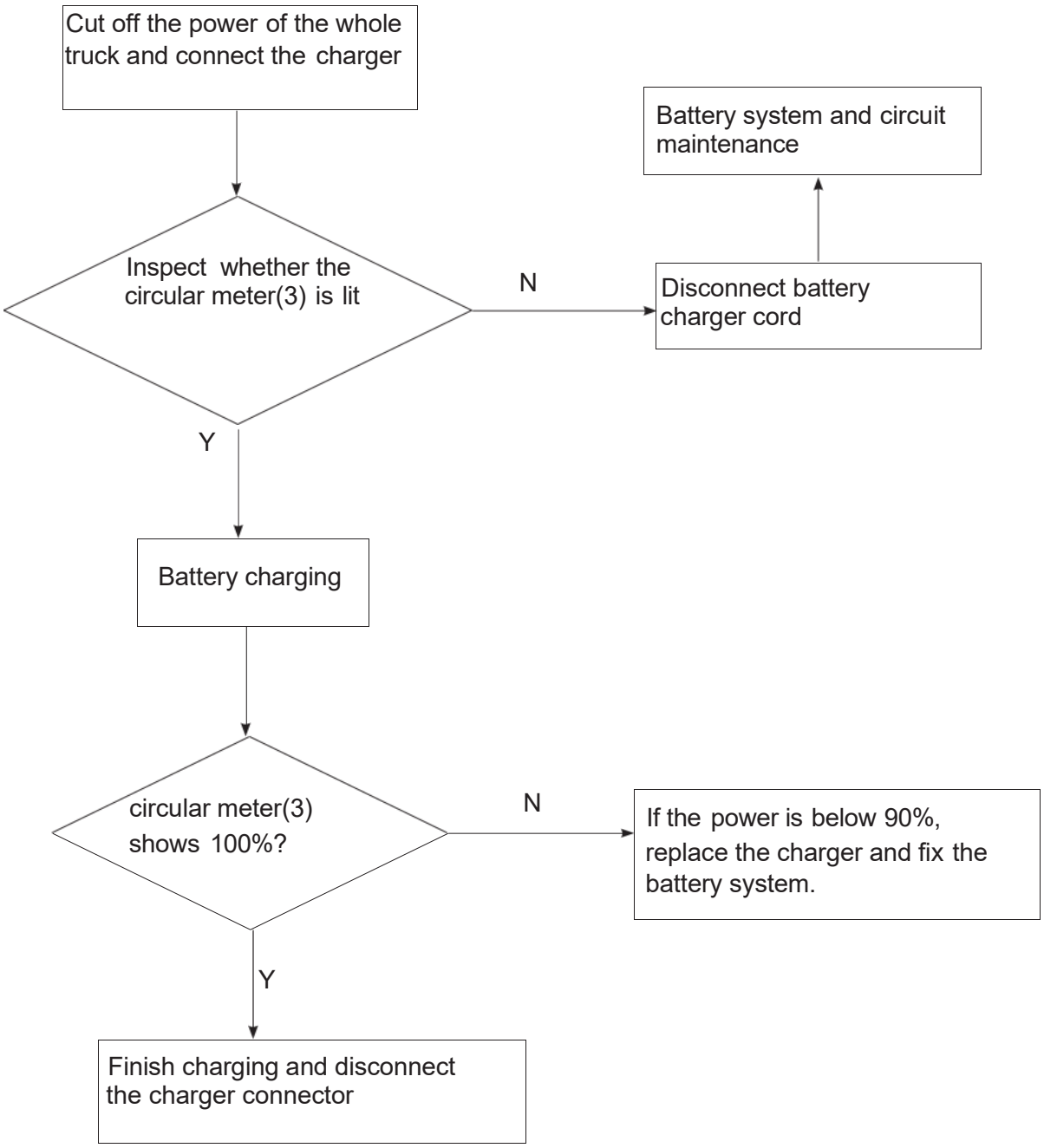

4.6.2 Discharging the battery

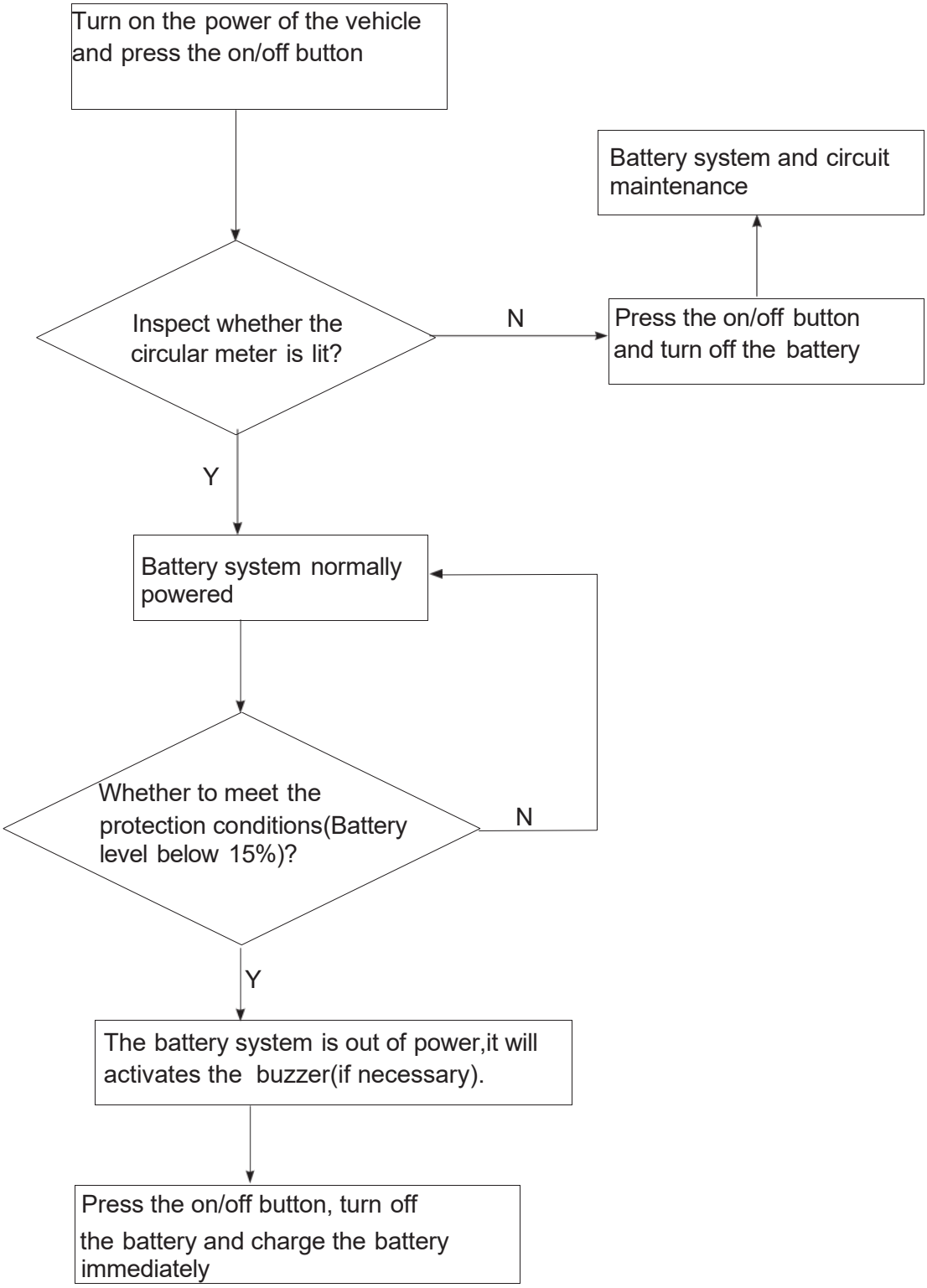

4.7 Transportation

Before transporting any lithium-ion battery,check the current regulations on the transport of dangerous goods.Comply with these when preparing the packaging and transport.Train authorised staff to dispatch lithium-ion batteries.

NOTE

It is recommended that the original packaging is kept for any subsequent dispatch.

A lithium-ion battery is a special product.

Special precautions should be taken when:

Transporting a truck packed with Equipment orLithium batteries contained in Equipment

·Transporting only the lithium battery

·A class 9 danger label must be affixed to the packaging for transport.

It is different if the battery is transported on its own or in a truck.An example of a label appears in this supplement(see figure below).Refer to the latest current regulations before dispatch as the information might have changed since this supplement was written. Special documents must be sent with the battery.Refer to the applicable standards or regulations. The applicable IATA,ADR and IMDG regulations must be observed during transport.

For UN3480	Lithium-ion Batteries	Fig0000-000800M
For UN3481	Lithium-ion Batteries packed with Equipment or Lithium batteries contained in Equipment	

WARNING

Do not pack higher than 1.2m above the floor of the container and secure properly.

NOTE

"Overpack"is the name for the outer packaging of the dangerous goods.

NOTE

Recharge the lithium-ion battery before transporting it taking account of the transport mode (sea,road,air).Excessive discharge on arrival could damage the performance of the battery.

4.7.1 Shipping faulty batteries

To transport these faulty lithium-ion batteries,contact the manufacturer's customer service department.Faulty lithium-ion batteries must not be transported independently.

4.8 Lifting by crane

⚠ WARNING

All persons involved in loading by crane must be trained.

- *Incorrect crane loading procedures due to untrained personnel can result in the battery falling. There is a risk of injury to personnel and a risk of material damage to the battery.*
- *Loading must only be performed by specialist personnel trained for this purpose.*
- *The specialist personnel must be instructed in securing loads on road vehicles and handling load securing devices. In each case correct measurements must be taken and appropriate safety measures applied.*

⚠ WARNING

Improper lifting of the battery by crane can cause accidents.

The use of unsuitable lifting gear and the improper use of correct lifting gear can cause the battery to fall when being lifted by crane.

Prevent the battery from striking other objects when they are being raised, and avoid any uncontrolled movement. If necessary secure the battery with guide ropes.

- *The battery should only be laden by people who are trained in handling lifting slings and lifting equipment.*
- *Wear personal protective equipment (e.g. safety boots, helmet, hi-vis jacket, protective gloves etc.) when loading by crane.*
- *Use the lifting slings only in the prescribed load direction.*
- *Always attach the crane lifting gear to the prescribed strap points and prevent them from slipping.*
- *Avoiding diagonal pull*
- *When lifting the lithium-ion battery, ensure that the battery remains level.*
- *Ensure that no one is in the working range of the hoist when using it to lift the battery!*
- *Walking around under the lifted battery is absolutely prohibited.*
- *Use lifting equipment and a hoist that has sufficient carrying capacity to lift the batttery. For the batttery weight , see section nameplate data for lithium-ion battery.*
- *The sling must be fastened at the designated lifting points(handle) when using the hoist.*

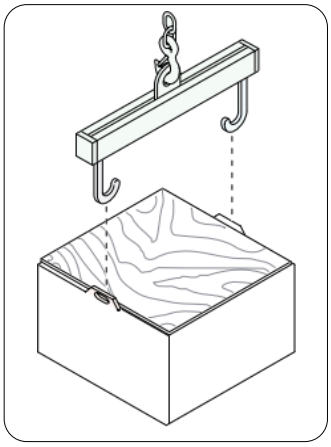

4.9 Removing or installing the battery

When moving, installing, or removing the battery, do the following:

- Ensure the service area is equipped with the proper tools designed for moving industrial batteries, such as a conveyor or overhead hoist.
- Use lifting hooks that have safety latches and are the correct size.
- Use a specialized attachment device, such as an insulted spreader bar, to install the lifting device to the battery. The width of the spreader bar must be the same as the width of the battery, to prevent damage to the battery.
- Chain hoists must be equipped with containers to accumulate any excess lifting chain.
- Keep all tools and other metal objects away from the battery terminals.
- Only authorized personnel familiar with handling industrial batteries move, store, install, or remove the battery.
- Use insulated tools and lifting equipment only.
- If installing a new battery, check the battery for damage before installing.

⚠ WARNING

Risk of short-circuits during removal and installation of the lithium-ion battery

Battery cables can be trapped or severed when lifting out the battery. If the contactor inside the lithium-ion battery is closed in the event ofa fault, the battery voltage exists between the battery terminals. This presents a risk of short-circuits (live parts).

The short-circuit produces a high electric current. This current can lead to dangerous current flows through the body, burns or electric arcs.

- *Only have the lithium-ion battery installed and removed by authorised maintenance personnel.*
- *Remove any rings, metal wristbands etc.*
- *Wear personal protective equipment (e.g. safety gloves, safety shoes, hi-vis jacket, hard hat).*
- *Position the battery connector, plus and minus cables such that they cannot be trapped or severed.*
- *Do not place any objects or tools on the lithium-ion battery to avoid short-circuiting the battery.*

⚠ WARNING

Risk of crushing during removal and installation of the lithium-ion battery

Due to the weight of the battery, there is a risk of crushing of the arms and legs when removing or installing the lithium-ion battery.

- *Only have the lithium-ion battery installed and removed by authorised maintenance personnel.*
- *Remove any rings, metal wristbands etc.*
- *Wear personal protective equipment (e.g. safety shoes, hard hat, hi-vis jacket, protective gloves).*
- *Park the truck securely on level ground before installing or removing the lithium-ion battery.*
- *In exceptional circumstances (e.g. defective brake), place wedges underneath the wheels to prevent the truck from rolling away.*
- *Do not place any parts of the body between the lithium-ion battery and the truck or ground.*
- *Note the centre of gravity of the battery.*
- *Only use crane lifting gear with sufficient capacity when replacing the battery.*
- *Use only approved battery replacement devices (e.g. battery roller stand, battery replacement station).*
- *Insert battery retainers after installing the lithium-ion battery in the battery compartment.*
- *Check that the battery is securely seated in the battery compartment.*

4.10 Instructions for disposal

- Lithium ion batteries must be disposed of in accordance with the relevant environmental protection regulations.
- Used cells and batteries are recyclable economic goods. In accordance with the mark showing a crossed rubbish bin, these batteries may not be disposed of as domestic waste. Return and / or recycling must be ensured as required by the Batteries Legislation.
- The method of battery recovery and reuse can be discussed with our company.
- We reserve the right to change the technology.

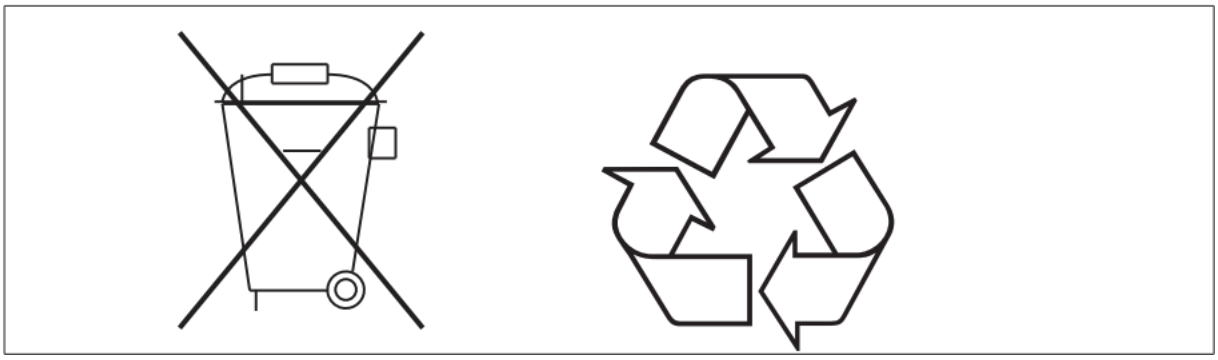

4.10.1 The requirements of recycling

- Only authorized EP dealers who have attended the after sales training, are authorized to do repairs on EP batteries.
- All Li-ion battery should be placed in safe place according to the EP Li-ion battery Manual;
- The transport of Li-ion battery must meet local regulation, EP will supply UN38.3 and MSDS files according with UN and ADR regulation;
- The package of Li-ion battery before delivery must meet the UN 3480 or local carrier regulation;

4.11 Storage

Before a long period of inactivity, the battery must be fully charged.

- We recommend that batteries are stored at a height between 60 and 120 cm. EP recommends storing lithium-ion batteries in a raised rack or shelf that allows for protection from possible collision damage.
- Store the battery in a dry place at a temperature between 0 and 40° and a maximum humidity of 85%. Lithium-ion batteries should be stored indoors, away from heat sources and direct sunlight, and in a well-ventilated;
- When storing a battery for an extended period, inspect it regularly (every 1 months) and maintain a charge level of 50% or greater.
- Disconnect the lithium-ion battery from the truck if it is to remain unused for longer than a week (e.g. detach the battery connector / interface connector).

⚠ CAUTION

Discharge can damage the battery

If the battery is not used for a long period of time, it can become damaged through discharge.

⚠ WARNING

Do not store the faulty or discarded battery for a long time;

⚠ WARNING

No load bearing, squeezing and contact stacking when storing the batteries;

⚠ DANGER

Do not place the batteries near cargo warehouses or near flammable and explosive dangerous goods.

4.12 Cleaning

The manufacturer recommends to only use compressed air at less than 207 kPa (30 psi) or a slightly damp towel to clean the battery. The battery, or its charging station, may be equipped with fans, heat sinks, or other cooling devices that require periodic cleaning. Always know and follow the battery manufacturer's recommendations for cleaning and service.

5 Troubleshooting

5.1 Common Problems and Solutions

During the use and maintenance of the lithium-ion battery, the battery or battery system may have one or more of the following abnormal conditions, please organize the professional engineers and technicians to perform the necessary processing according to the instructions in this manual; if you have any questions about the status or solutions, please contact ep dealer or after-sales service department of the company to obtain professional technical support.

- If the battery is found to have abnormal mechanical characteristics such as swelling, cracked casing, melted casing, and distortion of the casing before and during installation, stop using the battery immediately, place it in open and well-ventilated space, and contact the after-sales service.
- If abnormalities such as looseness, cracks, cracks in the insulation layer, burn marks, etc. of the battery's pole pressing bolts, conductive strips, main circuit wires and connectors are found before and during the installation, stop using the battery immediately, check the reason for analysis and give it a fix;
- If the polarity of the positive and negative terminals of the battery is found not match the polarity identification before installation, please stop using the battery immediately and contact the after-sales service department to replace the battery or obtain other solutions;
- If the battery is found to emit smoke or fire:

5.2 Emergency measures for battery pack smoke or fire

5.2.1 Overheating warning

- When the battery temperature is higher than 60°C, the battery reports the fault code: 17A104 (for batteries with round gauges). The driver should end the operation, drive to a safe area, open the protective cover and expose the battery to cool down; the cooling area should be equipped with fire extinguisher.
- When the battery temperature is higher than 65°C, the battery reports fault codes: 17A040, 17A041, 17A042, 17A043, 17A044, 17A045, 17A181 (for batteries with round gauges) depending on the locations of the high temperature. The driver should end the operation, quickly evacuate the crowd, open the protective cover and expose the battery. Also prepare a fire extinguisher and water, ready to respond to abnormal battery problems.

5.2.2 Smoke and fire burning and exploding

- When the battery smokes, please notify personnel to leave the faulty vehicle quickly and immediately implement power-off operation and use carbon dioxide or dry powder fire extinguisher to cover the battery with oxygen isolation. Then move the faulty battery to an open area according to the site conditions and repair or recycle the battery. If you meet complex problems, please call the after-sales service for advice.
- To deal with batteries with open flames, operators should also immediately power off the batteries and use carbon dioxide or dry powder fire extinguishers to suppress the fire as well as water-based extinguishers to cool it down. Place in an open area at least 5 meters away and repair or recycle as appropriate. In accordance with the relevant regulations of the environmental protection department, the damaged battery must be recycled within 5 days.

- For vehicles with people trapped in the fire, adhere to the principle of "saving people first, scientific rescue" and carry out simultaneous demolition, fire-fighting and rescue operations.
- Depending on the site environment and the fire, judge whether to carry out a stabilization operation on the vehicle on fire, and if possible, use other forklifts to move the burning forklift to an open area.
- Use a fire-filtered integrated gas mask or air breathing apparatus, as appropriate, to provide respiratory protection to trapped personnel.
- When the fire cannot be effectively controlled, fire blankets and other equipment can be used to protect the trapped personnel to avoid injury to the greatest extent possible, and to quickly use breaking (breaking process is strictly forbidden to blindly penetrate the battery pack, cutting, prying open operations to avoid increasing the fire and electric shock), lifting and other life-saving equipment to launch rescue operations.
- Firefighters should extinguish fires in vehicles where no personnel are trapped at a distance of 10 to 15 meters from the vehicle on fire.
- When protective components are usually present around the battery pack and the whole vehicle after adaptation, and it is difficult to spray directly to the point of ignition. A large amount of water should be used to cool the exterior of the battery pack sufficiently to prevent the spread of fire.
- Move the damaged battery to an open and safe area and evacuate the surrounding area quickly, to reduce the spread of damage to people and property.
- Due to the flammable and polluting nature of electrolyte fumes and vapors, keeping away from people also serves to reduce secondary hazards caused by starting fires.
- Quickly remove combustible materials near a battery that has spontaneously combusted to avoid causing a wider fire.
- If permitted, the battery pack can be removed from the vehicle and buried directly into the earth or sand to prevent the battery from re-igniting and exploding and to prevent the spread of smoke and dust. And a large amount of water should be used for cooling. If not permitted, the battery should be continuously cooled down by water spraying after the open fire is extinguished until the battery temperature drops below 60°C and the risk of re-ignition and explosion is assessed before the rescue operation can be stopped.

Lithium-ion batteries typically require no maintenance. If needed, any service or maintenance should be performed by a certified technician.

ZL80280-78
(80 V | 280 Ah)

Lithium-ion battery

Operation Manual

V1-07/25
(en-EN)

Foreword

Thank you for buying our products.

The manual will show you the way of correctly using the battery as well as relevant preventive maintenance and safety operation. The battery should be operated only by well-trained professionals and by no means by non-working personnel. Operators are supposed to read through the manual before actually operating the battery.

Explanations on the manual

With the continuous upgradation and improvement of our company's products, you may find a slight difference existing between your carrier and some introductions in the manual.

All the information, specifications and illustrations in the manual are effective in times of printing and our company maintains the right to modify the specification (s) or design (s) of our products at any time without any beforehand notification.

Relevant documents (e.g. operating instructions)

Depending on the application, other operating instructions (e.g. truck, battery charger) may have to be observed when operating the lithium-ion battery.

The execution, operating, warning and safety instructions in these operating instructions must be observed and complied with at all times to prevent personal injury and material damage.

Observe additional device-related provisions and regulations.

Safety notices and text mark-ups

Safety instructions and important explanations are indicated by the following graphics:

⚠ DANGER

Means that failure to comply can cause risk to life and/or major damage to property.

⚠ WARNING

Please strictly adhere to these safety instructions to avoid personal injury or major damage to equipment.

⚠ CAUTION

Please pay attention to the important safety instructions.

i NOTE

Pay attention to Instruction.

Table of content

Pg.
1 General 1
1.1Lithium-ion battery Introduction 1
1.1.1Proprietor responsibilities 1
1.1.2Intended use 1
1.1.3Permissable operating conditions 2
1.1.4Reasonably foreseeable misuse 2
1.1.5Accessories 2
1.1.6BMS (Battery Management System) 2
1.1.7Battery Usage Guidelines and Manufacturer Compliance 3
2 Lithium-ion battery description 4
2.1Performance data for lithium-ion battery 4
2.1.1Battery nominal data 4
2.1.2Information for battery and charger 5
2.1.3BMS nominal data 5
2.1.4Charger nominal data 6
2.1.5BMS nominal data 6
2.2Battery featuring circular meter 8
2.3Nameplate 9
2.3.1Nameplate 9
2.3.2Identification points 10
2.4Information on the conformity of lithium-ion batteries: 11
2.5Battery lifetime and maintenance 11
2.5.1Optimize Battery Life 11
2.5.2Maintenance table 12
3 Safety 14
3.1It is necessary to respect the following guidelines 14
3.2Warning Indications 16
3.2.1Labelling for Lithium-ion battery maintenance instructions 17
3.3Potential hazards 19
3.3.1Physical damage: 19
3.3.2Short circuits: 19
3.3.3Temperature effects: 19
3.3.4Examples of where to store a non-functional battery 19
3.3.5Fire hazard 19
3.3.6Material discharge 20
3.4Touch voltage hazard 21
4 Operation 22
4.1Lithium-ion battery routine inspection 22
4.2Instructions on faulty batteries inspection 22
4.3Checking batteries for signs of malfunction 22
4.4Hazard of faulty or discarded battery and recycle 24
4.5Commissioning 25
4.6 Charging 25
4.6.1Charging the battery 27
4.6.2Discharging the battery 28
4.7Transportation 29
4.7.1Shipping faulty batteries 29
4.8Lifting by crane 30
4.9Removing or installing the battery 31
4.10Instructions for disposal 32

Table of content

Pg.
4.10.1The requirements of recycling 32
4.11Storage 33
4.12Cleaning 33
5 Troubleshooting 34
5.1Common Problems and Solutions 34
5.2Emergency measures for battery pack smoke or fire 34
5.2.1Overheating warning 34
5.2.2Smoke and fire burning and exploding 34

1 General

1.1 Lithium-ion battery Introduction

Lithium-ion (Li-ion) batteries have many advantages over traditional lead acid and other types of batteries. EP's Li-ion batteries are classified as LFP 'Lithium Iron Phosphate' or LiFePO4. The lithium-ion battery unit is composed of battery cells in series or in parallel; It is equipped with battery management system for monitoring and protecting the lithium-ion battery; The different or the same electrical connector design for charging and discharging; The circular meter shows data, error code, total voltage and temperature, ect. When stored, handled, and used properly, they also have a longer service life than other batteries have a higher power density, don't need a cooling down period, and can be opportunity charged. EP's priority is safety and establishing the following safety procedures for storing, handling and use of these batteries will help prevent fires and explosions. Companies training employees to recognize the hazards of Li-ion and other types of batteries as well as how to handle, store and manage them properly will help to avoid damage to the batteries resulting in possible fires and explosions.

This battery should not be used at a very low SOC (state of charge) status. To ensure the battery life, should avoid the discharge depth of more than 80% of the rated capacity of the battery. Whether it is partially discharged or fully discharged, the battery should be immediately charged.

Lithium batteries have a special charger and may not be charged with other types of battery chargers, so as not to charge lithium batteries. The new factory battery should not be discharged, it must be fully charged before use.

1.1.1 Proprietor responsibilities

For the purposes of these operating instructions, the "owner" is defined as any natural or legal person who either uses the lithium-ion battery himself, or on whose behalf it is used. In special cases (e.g. leasing or renting), the owner is considered to be the person who is to carry out the specified operational duties in accordance with existing contractual agreements between the proprietor and operator of the lithium-ion battery.

The owner must ensure that the lithium-ion battery is used only for the purpose for which it is intended and that dangers to life and health of the operator or third parties are excluded. Furthermore, accident prevention regulations, safety regulations and operating, servicing and repair guidelines must be followed. The owner must ensure that all operators have read and understood these operating instructions.

1.1.2 Intended use

- Powering electric forklifts for material handling and logistics operations.
- Providing reliable energy storage for prolonged usage in warehouse environments.
- Enhancing efficiency and productivity in industrial settings.
- Facilitating indoor and outdoor material transportation tasks.
- Supporting sustainable operations through reduced emissions and maintenance requirements.

i NOTE

Please note that using our lithium-ion batteries for purposes other than those specified above may compromise performance and safety. For inquiries regarding the intended use of our lithium-ion batteries for electric forklifts, please contact our After-sales service department.

1.1.3 Permissable operating conditions

The lithium-ion battery is intended exclusively for use in industrial trucks specified and approved by the manufacturer. Any other use beyond the scope of the above is not appropriate. The owner or user of the lithium-ion battery alone shall be liable for any damage arising from the above. Furthermore, any liability and warranty claims shall be rendered null and void.

- Operational application temperature 0° C-40° C, humidity ＜ 80%;
- Charging application temperature 5° C-40° C;
- The battery's maximum operation altitude is up to 2000m;

i NOTE

Lithium-ion battery working temperature is divided into charging temperature requirement and discharging temperature requirement:

The charging temperature range is 0°C-40°C. A high-rate recharging operation below 0°C may lead to battery damage, so we recommend temperature range is 5°C-40°C;

The discharging temperature range is -20°C-55°C. If used in low temperature°C-20°C-0°C, battery discharge capacity will be smaller compared with the one in normal temperature condition, which is normal; battery used between 40°C-55°C in the long run will accelerate the aging of the internal material. It may shorten the service life of battery, so not recommended. So we recommend working temperature is 0°C-40°C.

1.1.4 Reasonably foreseeable misuse

- Never short circuit the battery terminals.
- Do not reverse the battery polarity.
- Do not overcharge.

1.1.5 Accessories

Do not use a charger that is not released by EP for lithium-ion battery.

1.1.6 BMS (Battery Management System)

- The EP battery management system (BMS) for a lithium-ion battery is crucial for the safety and performance of the system. Here are the most important features and functions:
- Current, voltage and temperature monitoring: the BMS continuously monitors the charging current, battery voltage and temperature of the cells, as well as the individual modules, during the charging and operating cycle.
- Differentiation for cells and modules: The BMS can differentiate between the individual cells and modules and monitor and control individual parameters for each cell or module to ensure even utilization and optimum performance.
- Safety shutdown: If safety limits are exceeded, such as critical temperatures, currents or voltages, the BMS safely shuts down the system to prevent damage to the battery and ensure safety.
- Output of error codes with corresponding action: The BMS recognizes errors and outputs corresponding error codes. Depending on the severity of the fault, the BMS can take measures such as issuing warning messages or switching off the system.
- Permanent communication with the vehicle's CAN bus: The BMS communicates continuously with the vehicle's Controller Area Network (CAN) bus to exchange important data and ensure that the BMS and other vehicle systems work in a coordinated manner.

- Integrated telemetry system (optional): In certain EP vehicle types, a lithium-ion battery is equipped with an integrated telemetry system. This system records and transmits important battery operating data, such as cell voltages, temperatures and currents. This telemetry data can be accessed online and enables real-time monitoring and analysis of battery performance.

1.1.7 Battery Usage Guidelines and Manufacturer Compliance

The use of batteries must strictly follow the manufacturer's instructions. Any modification to lithium batteries or their safety devices is strictly prohibited unless prior written approval is obtained from our company. Only original spare parts ensure compliance with the manufacturer's quality management standards. Our company shall not be liable for any vehicle malfunctions or accidents caused by the use of non-original spare parts. For more details, please refer to the lithium battery warranty agreement and relevant contract terms.

2 Lithium-ion battery description

2.1 Performance data for lithium-ion battery

2.1.1 Battery nominal data

Battery cell		
1	Cell material	LFP
Battery system		
2	Burst mode	parallel circuit or series circui
3	Ambient relative humidity	≤80%RH
4	Operational application temperature	0-40℃

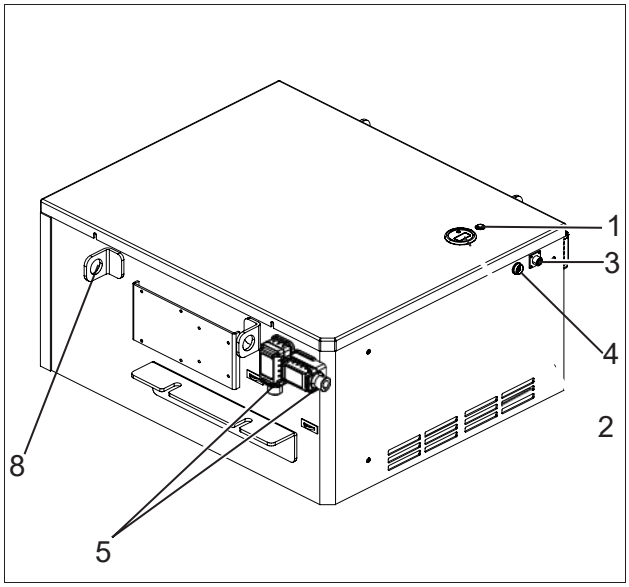

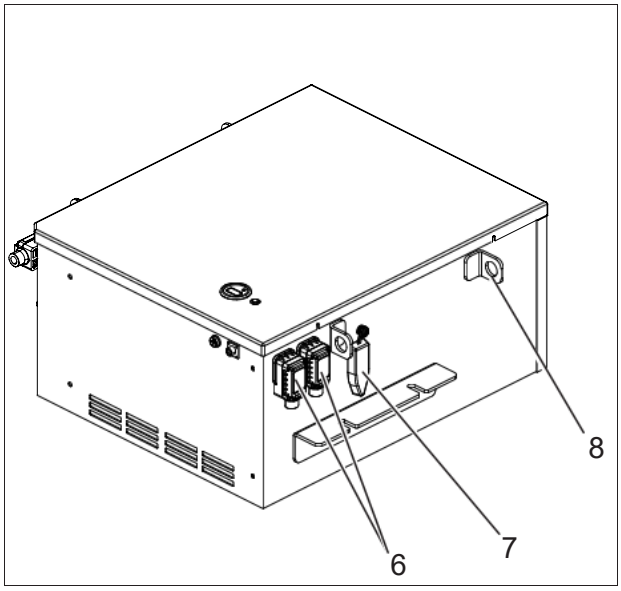

Item	Description	Function
1	On/off button	Start up or cut off the lithium-ion battery
2	Circular meter	Show information of lithium-ion battery. (refer to chapter 5 Battery indicator)
3	Charging communication	Charging communication management
4	Discharging communication	Discharging communication management
5	Discharging plug	Discharge the capacity of the lithium-ion battery.
6	Charging plug	Charge the lithium-ion battery via the charging plug connect to the charger plug.
7	GPS	Telematics
8	Handle	Sling point

2.1.2 Information for battery and charger

Battery type	Vlotage/Rated capacity	Dimensions	Weight	Charger
ZL80280-78	80V/280AH	739*730*346	186kg±5kg	60A/100A

2.1.3 BMS nominal data

Battery cell		
1	Cell material	LFP
2	Nominal Voltage	3.2V
3	Voltage rang	2.6V~3.65V
Battery system		
1	Battery box size	739*730*346
2	Weight	186kg±5kg
3	Group method	Series-parallel connection method
4	Rated voltage	76.8V
5	Rated capacity	280Ah@25℃ 1C discharge
6	Voltage rang	60V~87.6V
7	Total enery	21.5 kWh
8	Rated charging current	140A
10	Rated discharge current	200A
11	Maximum continuous discharge current	400A
13	Ambient relative humidity	≤80%RH
14	Standard discharge temperature range	-20℃~ 60 ℃ (discharge)
15	Standard charging temperature range	0℃~ 55 ℃

2.1.4 Charger nominal data

1	Adaptive voltage	65-90V
2	Output current	100A
3	Output voltage	380±15%
4	Output voltage	65V~90V
5	Output power	9kW
6	Protected mode	Input overvoltage protection, input undervoltage protection, output overvoltage protection, output overcurrent protection, short circuit protection, product overtemperature protection, battery reverse protection, battery open circuit protection
7	Communication function	CAN communication
8	Charging port	REMA320 interface
9	Way to install	Safety fixed
10	Display	instrument
11	Mechanical life	10000 times
12	Operating temperature	-10℃ ~40℃
13	Operating humidity	30%RH~50%RH

2.1.5 BMS nominal data

BMS management system function			
No.	**Item**	**Function**	**Function description**
1	Inspection/ estimates	Monomer voltage detection	Accurate acquisition of all cell voltage data
2		Total voltage detection	Accurate acquisition of total voltage data
3		Temperature collecting	Accurate detection of battery temperature
4		Current inspection	Accurate detection of charge-discharge currents
5		SOC Estimate	Hall sensor is used to obtain the input and output current of the battery, and the SOC estimation of the battery is carried out by the method of Ampere-time integration
6	Communication function	CAN communication	Communication and Debugging

7	Protection function	Short-circuit protection	Power circuit short circuit, contractor disconnect
8		Over current protection	Over current occurs, contractor disconnect
9		Over charging protection	Over charge occurs, contractor disconnect
10		Over discharging protection	Over discharge occurs, contractor disconnect
11		Over temperature protection	Over temperature occurs, contractor disconnect
12	Sleep wake	Sleep awakening function	charge communication wake-up, battery switch button wake-up

BMS specification parameters			
No.	Item		Remark
1	Working voltage range	62.4V~87.6V	Selection
2	Normal power consumption	10mA	stable
3	Detection number of series	24 series	Selection
4	Temperature detection points	6PCS	Selection
5	Measurement range of cells voltage	2.4V~4.5V	Selection
6	Measurement accuracy of cell voltage	±10mV	Selection
7	Current detection accuracy	±1A	Selection
8	Electricity display accuracy	±1%	stable
9	Temperature range	-45~100℃	Selection
10	Temperature measurement accuracy	±1 ℃	Selection
11	Equalizing current	90mA	Selection
12	Communication functions	CAN	Selection
13	low power consumption	20uA	stable
14	Working environment temperature range	-25℃~ 60 ℃ (discharge)	stable

2.2 Battery featuring circular meter

No.	Name	Description
1	Energy display	When all 10 cells are on, it indicates that the battery is full; When the first cell and the second flash alternately, it indicates that the battery is low and must be charged. The battery remaining charge is displayed; “100%” indicates that the battery is fully charged.
2	Total voltage	The sum of the total voltages of the lithium battery series (normal voltage rang of total voltages of the battery2.5~3.65V*15 for 48V 2.5~3.65V*24 for 80V)
3	Temperature	Battery temperature
4	Charging current	Current value when charging the lithium battery
5	Maximum cell voltage	Maximum value of cell voltage, (normal voltage rang of the cells of the battery2.5~3.65V)
6	No. of cell	Identification No. of the cell with maximum voltage.
7	Minimum cell voltage	Minimum value of cell voltage (normal voltage rang of the cells of the battery2.5~3.65V)
8	Cell No. of minimum cell voltage	Identification No. of the cell with minimum voltage.
9	Fault code	If the battery fails, the fault code will be displayed

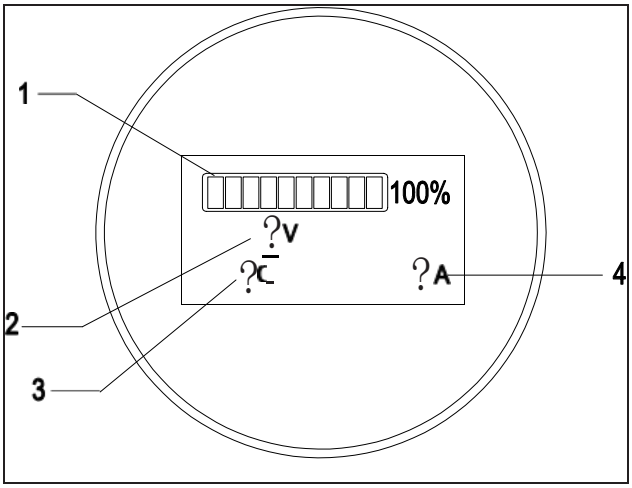

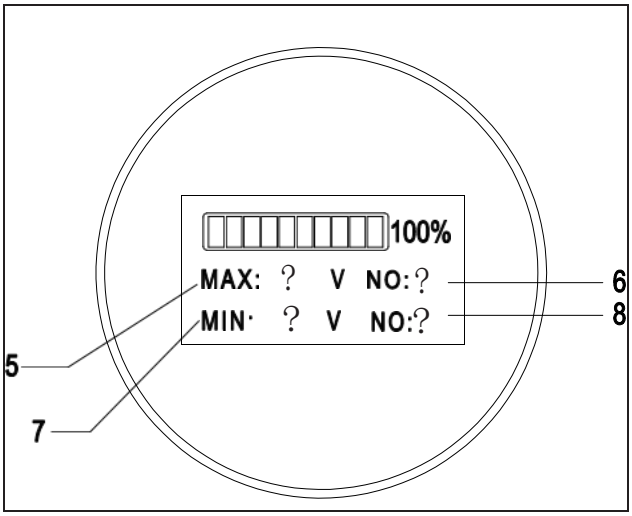

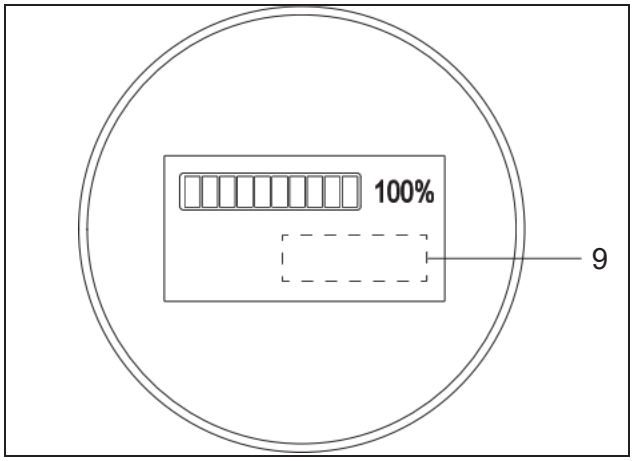

2.3 Nameplate

2.3.1 Nameplate

Item	Description
1	Battery name
2	Battery designation
3	Battery model
4	Serial number
5	Manufacturer
6	Address
7	Manufacturing date
8	Battery weight
9	Nominal voltage
10	Nominal energy in Watt hours
11	Recommended charge voltage
12	Warning Indications(see section 3.2）
13	Recycle sign(see section 4.9）

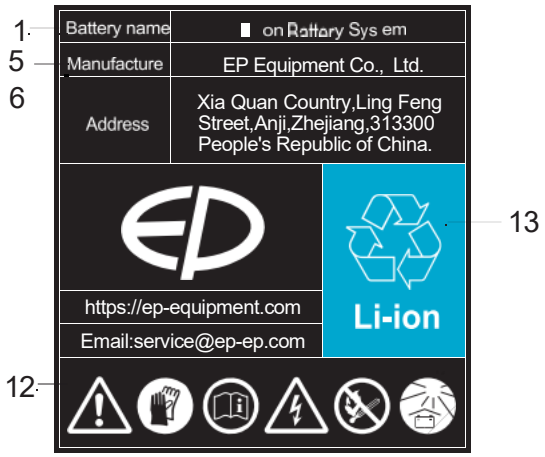

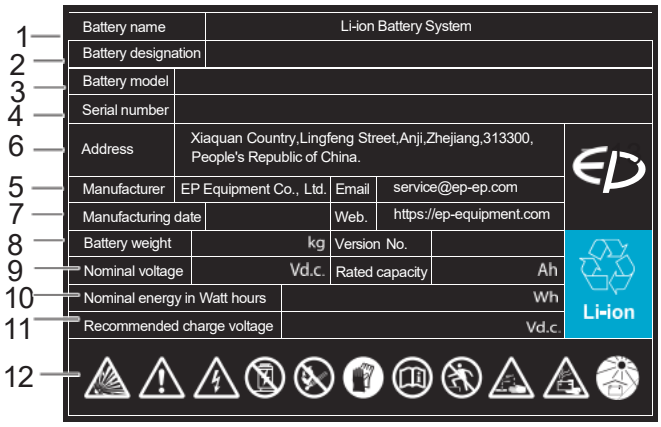

NOTE

The label position is subject to the actual lithium-ion battery.

2.3.2 Identification points

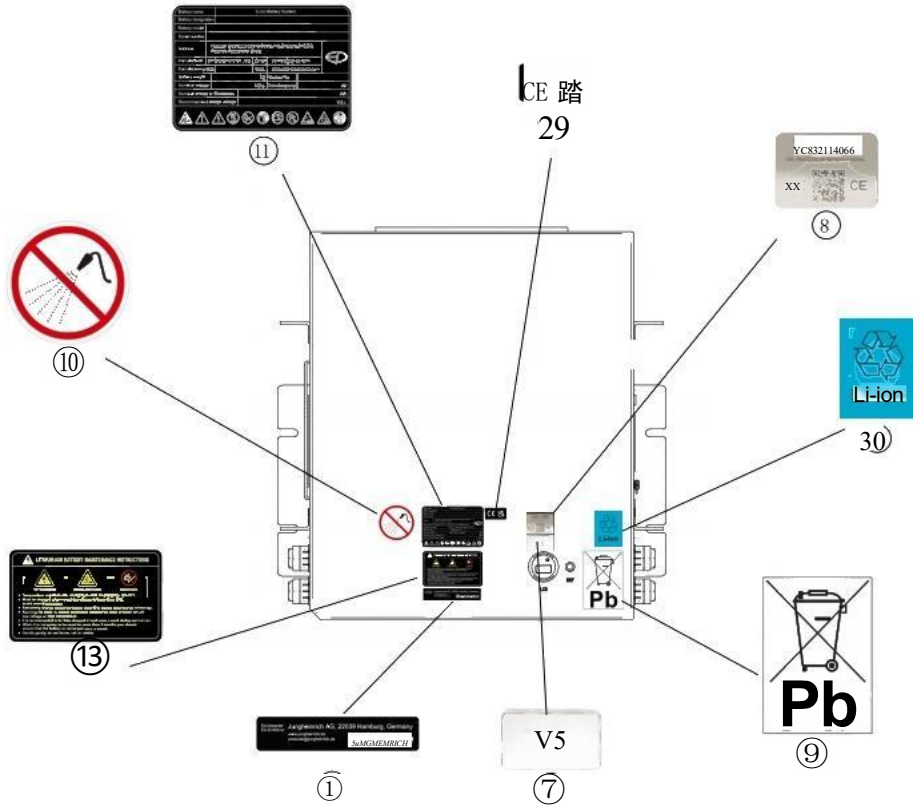

Item	Description
1	Jungheinrich information label
7	Version label
8	Remote link QR code label
9	Pb battery classification collection labels
10	No spraying labels
11	Lithium-ion battery label
13	Nameplate for lithium-ion battery usage and maintenance instructions
29	CE/UKCA label
30	LI-ION battery recycling label

2.4 Information on the conformity of lithium-ion batteries:

1) Regulation (EU) 2023/1542 in Articles 6, 10 and 13.
2) Directive 2011/65/EU including amendment (EU)2015/863 in the latest valid version.
3) EMC Directive 2014/30/EU in the latest valid version in the harmonised standards EN 12895:2015+A1:2019, EN IEC 61000-6-2:2019 and EN IEC 61000-6-4:2019.
4) The harmonised standard EN 62619 in the latest valid version and to the harmonised standard EN 1175:2020 Annex C.2 as energy sources for industrial trucks.
5) If a radio system is installed, we declare that it complies with the RED Directive 2014/53/EU.

2.5 Battery lifetime and maintenance

2.5.1 Optimize Battery Life

Always use and follow the battery management system (BMS). The BMS is the electronic system that monitors battery data and use that data to its operating environment to influence the battery's safety, performance, and service life. It also functions as a safety cut-off device in case of overcharging, overcurrent, or overheating. Lithium-ion battery life is greatly reduced
if used outside a temperature range of 0ºC to 40ºC (32ºF to 104ºF) or in an environment with greater than 85% humidity. EP recommends to opportunity charge lithium-ion batteries. This is when the battery is recharged for short intervals during a shift period. It reduces or eliminates the need for long charging periods, changing batteries during a shift, and extending shift periods.

2.5.2 Maintenance table

No.	Maintenance content	Method of operation	Note	Frequency
1	Check if battery capacity is too low	Check instrumentation SOC display	Make sure the battery is not stored without charge for a long time. If the battery system needs to be put on hold for a long time, it is best to keep the battery in half power state and charge the battery every 2 months.	Everyday
2	The battery pack charge and discharge current(if necessary)	Check instrumentation display	Make sure battery pack charge and discharge current meet meet requirements	Everyday
3	Check the voltage and temperature of a lithium battery(if necessary)	Check instrumentation display	Make sure battery pack charge and discharge current meet meet requirements	Everyday
4	Connector pins at the bottom of the battery(if necessary)	Perform a visual inspection	If any ablation or deformation occurs in daily inspection, the battery connector pins should be replaced in time.	Everyday
5	Check whether the appearance is deformed, whether the surface is oxidized, paint removing, the mounting position is offset, and the cabinet is damaged;	Perform a visual inspection	check the reason for analysis and give it a fix	Everyday
6	Check the entire battery as well as the surface beneath it for signs of fluid leakage.	Perform a visual inspection	check the reason for analysis and give it a fix	Everyday

No.	Maintenance content	Method of operation	Note	
7	Clean the lithium battery and charger(if equipped) with a dry cloth or compressed air.	Perform a visual inspection, Wear insulated gloves and shake it gently	Make sure it tight	weekly
8	Whether the external wiring harness has worn, imprint, creases and exposed line core	Perform a visual inspection	Make the wiring harness fixed well	weekly
9	Check that the surface of lithium-ion battery	No dust, no water, no corrosion, oxidation, rust, etc.	Clean surface if you found dust, corrosion, oxidation, rust by using dustless cloth or air compressor ,water battery is strictly prohibited to use	weekly
10	Check that the outside screws of the battery are fastened	Torque wrench correction requires no loosening	Reinforce screws	weekly
11	Check for water or foreign matter in the plug and socket and check for rust or charring(if necessary)	Perform a visual inspection	check the reason for analysis and give it a fix	Monthly
12	Check the cable for damage and loose joints(if necessary)	Perform a visual inspection	check the reason for analysis and give it a fix	Monthly
13	Check the battery case for abnormalities such as cracks, deformation, and bulging.	Perform a visual inspection	check the reason for analysis and give it a fix	Monthly

3 Safety

3.1 It is necessary to respect the following guidelines

- The battery is not used at a loss of power. To ensure the battery life, should avoid the discharge depth of more than 80% of the rated capacity of the battery. Whether it is partially discharged or fully discharged, the battery should be immediately charged.
- Lithium-ion batteries have a special charger, may not be charged with other types of battery charger, so as not to charge lithium batteries
- The new factory battery should not be discharged, it must be fully charged before use.
- Only trained and authorized personnel are permitted to charge, service and replace the batteries.
- Do not place lithium-ion batteries on or near flames or hot heat sources (> 65°C). This may cause the batteries to overheat or burst into flames. This type of use also impairs the performance of the batteries and reduces their service life.
- It is forbidden to take out the battery in the charging state.
- It is forbidden to use and store the battery at low power (the use and storage of power loss will cause the early loss of battery system capacity and accelerate the service life of the battery pack);
- It is forbidden for unqualified personnel to dismantle and overhaul the battery system and supporting charger and other devices; the battery system is a dangerous product, and maintenance and replacement can only be performed by professionals;
- Do not hit, throw or trample on the battery, do not heat the battery, do not throw the battery into the water.
- Use carbon dioxide or dry powder fire extinguishers if the battery harness smokes and ignites. If the battery is on fire, use a high-pressure water gun to extinguish the fire at a long distance.
- If the connection of the battery pole is found to be oxidized, wipe it with a dry cloth and polishit with a fine sandpaper before use. Otherwise, it may cause poor contact and the function fails.
- Prohibit the use of strong static electricity and strong magnetic field, otherwise easy to damage the battery safety protection device, bringing security risks.
- Do not use this series of products with other models or types of batteries in series or in parallel; prohibit the entire system with lithium-ion battery protection circuit board or battery management system, the power system in series or in parallel operation, if necessary, please contact this Company technical department to obtain the correct technical support.
- When charging and discharging Try to avoid splashing water or other conductive objects on the battery cover and pole, such as exposure to heavy rain.
- Once inadvertently make some kind of conductor come into contact with the positive and negative poles of a single battery or battery pack at the same time to cause a short circuit, be sure to disconnect the circuit which causes the short circuit in the shortest time.
- Risk of fire or smoke: LFP batteries can leak / evaporate or decompose and release flammable electrolyte under the condition of 150 ℃ if they are improperly used or affected by the environment. Hydrogen fluoride (HF) and phosphorus oxides may form during fire, and chemical reactions between LIPF6 and water in the electrolyte will produce fluoride and carbon dioxide.

- Contact with eyes: Electrolyte inside the battery will cause eye irritation and inadvertent contact. Please do not rub it. Rinse immediately with plenty of water for at least 15 minutes. If necessary, please go to the hospital for treatment immediately. Otherwise it will hurt your eyes.
- Contact with skin: The electrolyte inside the battery may cause skin infections, inadvertent contact, take off contaminated clothing and wash the infection with plenty of water and soap for at least 15 minutes, do not rub the ointment.
- Inhalation: When the battery is leaked or ruptured, the internal components of the battery may cause mucus, edema and other respiratory tract problems, inadvertently inhaled, to fresh air and ventilated contaminated area. If necessary, oxygen or artificial respiration.
- Special Protection Tools: Use breathing apparatus to avoid inhalation of irritating gases. Wear protective clothing or other devices to prevent body contact with the electrolyte.
- Using lifting and delivery devices as specified. Prevent the battery cell, interface and connection cable from being damaged by the lifting hook!
- This lithium-ion battery may not be approved for your specific forklift. Only use a lithium-ion battery,if it has been approved by he forklift manufacturer for your forklift. The lithium-ion battery shall only be handled by trained and authorized personnel.

⚠ DANGER

Failure to comply with these safety instructions can result in fire and explosion or the leakage of harmful materials.

⚠ WARNING

Should such issues as failing to abide by the operation manual, failing to use the original parts for maintenance or damaging caused by users themselves occur, the quality guarantee will be invalid automatically!

⚠ DANGER

Electrical danger

Only the After-Sales Service Centre technicians can open the battery.

3.2 Warning Indications

Follow the operating instructions and keep them in a visible position near the battery charger. If any faults are found on the lithium-ion battery,immediately take it out of service and contact the manufacturer's customer service department.

Always wear protective clothing (e.g. safety goggles and safety gloves) when working on cells and batteries!

- No smoke and fire!
- Avoid the existence of open fire, fiery metal wire or sparks around the lithium-ion battery, otherwise explosion or fire disaster may occur!

- Explosion or fire disaster is likely to occur; avoid short circuit!
- Keep the battery away from all fire sources, heat sources and flammable or explosive materials!

- Avoid hot plugging!
- Dangerous voltage!
- Notice: the metal part of the battery cell is electrified, so don't place any external object or tool on the battery cell!

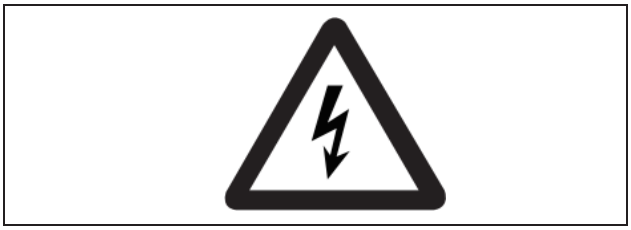

Do not place the battery on top of conductive objects!

- Don't knock over the battery!
- Using lifting and delivery devices as specified. Prevent the battery cell, interface and connection cable from being damaged by the lifting hook!
- If the materials leak out, do not inhale the fumes. Wear safety gloves!
- Always wash your hands after completing the work. Use only insulated tools.

Don't trample on the battery to prevent it from fierce shaking or shacking!

- Protect the battery from solar radiation or other forms of heat radiation.
- Do not expose the battery to any sources of heat.

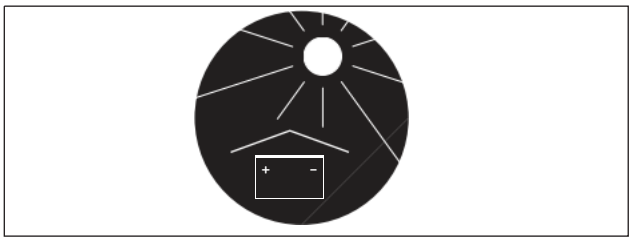

Electrolyte fluid can be discharged if the battery is physically damaged. Electrolyte fluid is harmful and must not come into contact with the skin or eyes(see section 3.3.7)

- Do not physically alter the battery, strike, crush, compress, notch, dent or modify it in any way.
- Do not open the battery, damage, penetrate, bend, heat or allow it to become hot, do not throw it on the fire, short or immerse it in or wash it with water.
- Do not drop it or allow anything to fall on it, do not store it or operate it in a microwave oven, kiln or pressure vessel etc.

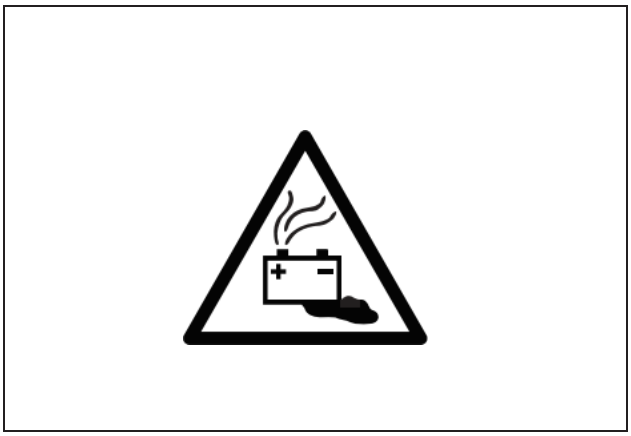

3.2.1 Labelling for Lithium-ion battery maintenance instructions

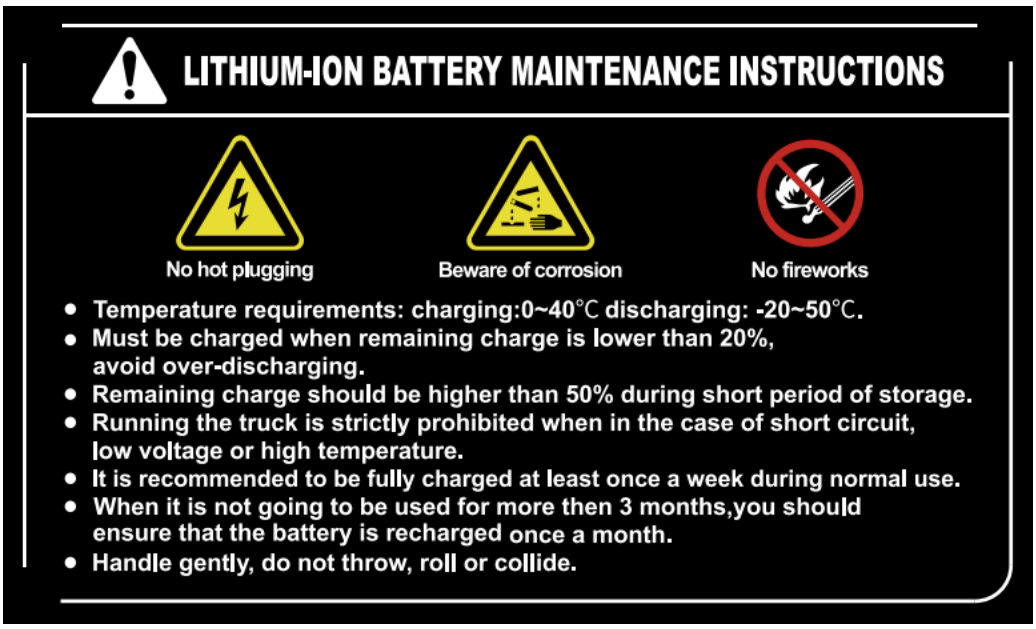

!WARNING

1.Do not use or store this truck below 20% state of charge!

2.Strictly follow the battery maintenance instructions found in the operation manual!

Item	Description
1	The use of the battery is strictly prohibited when leakage between the communication terminal at the bottom of the battery and the charging/discharging pins,or when leakage is present in the gaps around the pins.
2	The use of the battery is strictly prohibited if there are visible impact marks, cracks,or traces of damage on the battery.
3	The use of the battery is strictly prohibited if it emits pungent odors,exhibits housing swelling at the mid-joint,or shows abnormal swelling/bulging of internal cells
4	The use of the battery is strictly prohibited if the connector pins burnt,deformation,ablation

3.3 Potential hazards

- No hazards are anticipated if the equipment is used correctly.
- Do not use the equipment for anything other than its intended purpose.
- The following hazards can arise in the event of improper use:

3.3.1 Physical damage:

This can occur if a battery falls or is deformed through pressure (e.g. truck forks penetrate the battery housing).

Mechanical damage includes cracks, breakage, splinters or holes in the battery housing. This type of damage may be caused by a short circuit inside the battery,
which may result in harmful materials leaking, fire or battery explosion.

3.3.2 Short circuits:

These may be caused by connecting the two battery terminals (e.g. battery immersed in water)

3.3.3 Temperature effects:

High temperatures caused for example by sunlight or being store in warm locations (e.g. near ovens) can result in harmful materials leaking, fire.

In order to avoid fire and leakage of harmful materials, a safe place for storing batteries must satisfy the following criteria:

- Do not store in places often frequented by personnel.
- Do not store in places where valuable objects (e.g. cars) are stored.
- Fire extinguisher must be available to put out any fires.
- There should not be any fire or smoke detectors in the vicinity in order to ensure that an automatic fire detection system is only activated in the event of actual danger (e.g. naked flames).
- Small amounts of discharge from a single battery are not critical to the environment. Above-average natural ventilation is required in this case.
- No ventilation intake pipes should be in the vicinity, as discharged content could spread within a building.

3.3.4 Examples of where to store a non-functional battery

- Roofed outdoor position.
- Ventilated container.
- Covered box with pressure and smoke discharge option.

3.3.5 Fire hazard

⚠ WARNING

Physical damage, thermal effects or incorrect storage in the event ofa defect can result in fire.

Since the extinguishing of burning lithium-ion battery systems with suitable extinguishing agents extinguishing agents, the responsible fire brigade should be should be informed in advance or the company fire. Fire protection assistants should be trained accordingly.

NOTE

A suitable method is cooling down cooling with water. Accordingly the parking area and charging stations should be equipped with extinguishing facilities.

DANGER

There is a risk of fire.
Use water-based extinguishers,CO2, dry chemical fire extinguishers.

3.3.6 Material discharge

Battery electrolyte fluid can be hazardous

Electrolyte fluid can be discharged if the battery is physically damaged. Electrolyte fluid is harmful and must not come into contact with the skin or eyes.

If it does, rinse the affected parts with plenty of water and seek medical assistance immediately.

In the event of skin irritation or if any substances are breathed in, seek medical assistance immediately.

In the event of inhalation bring the affected person into the fresh air and keep them still.

Precautionary measures for personnel

- Keep personnel away and facing the wind.
- Block off the affected area.
- Ensure there is adequate ventilation.
- Wear personal protective equipment.
- If vapours / dust / aerosols are present, use self-contained breathing apparatus.

Precautionary measures for the environment

Do not allow spilled fluids to enter the water system, drainage system or the underground water.

Cleaning measures

The leaked fluid must be removed professionally by the operating company on the basis of a risk assessment and disposed of in the correct manner. The fire brigade, the Agency for Technical Relief or similar institutions must be used. Absorb residues with liquid-absorbent material (such as vermiculite, sand, universal binders and pebble grain).

3.4 Touch voltage hazard

⚠ WARNING

Touch voltage hazard!
Hazardous touch voltages may occur in the event of a technical or mechanical defect on the battery. Touch voltages also occur on seemingly discharged batteries. Touching the battery terminals or live attachments (battery cable, battery connector etc.) can result in dangerous current flows through the body. There is a risk of serious, irreversible or fatal injuries.

- Tag out the faulty battery and take out of service.
- Do not touch faulty batteries
- Do not place any objects or tools on the lithium-ion battery to avoid short-circuiting
- the battery.
- Do not short-circuit the lithium-ion battery.
- Notify the customer service department.

4 Operation

4.1 Lithium-ion battery routine inspection

△CAUTION

The following items should be checked every day.

Daily inspection items IAdditional servicing work to be performed every 1000 hours or every 6 months.	Troubleshooting
Liquid leakage and corrosion at the charging/discharging contacts at the bottom of the battery	Stop using the battery and handle in accordance with the chapter "4.3 Hazard of faulty or discarded battery and recycle".
Signs of liquid leakage at the bottom of the battery	
Case broken	
Swollen battery	
Connector pins burnt,deformation,ablation	Contact your authorised dealer to replace the contacts or Connector pins should be performed by a certified technician

4.2 Instructions on faulty batteries inspection

△DANGER

Faulty batteries may cause short circuits and lead to fires.To eliminate potential safety hazards and avoid unnecessary economic losses and other consequences,daily inspection is required,please act in strict accordance with the guidelines.

4.3 Checking batteries for signs of malfunction

Whether there is any leakage between the communication terminal and charging/discharg pins at the bottom of the battery,and in the around the pins;

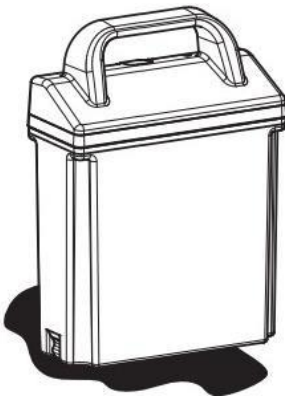

sample

Check whether there are pungent smells;
Check the middle connection of the body f
swelling of the housing or internal cells
abnormal expansion,bulge

sample

Check whether there are crack or damage
Check the battery for signs of impact and
damage.

sample

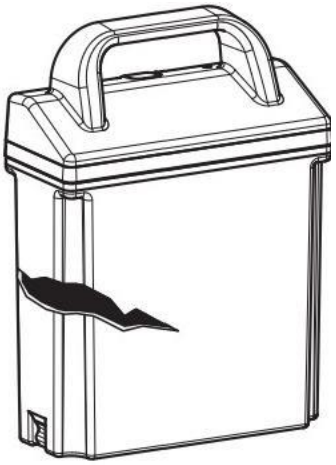

4.4 Hazard of faulty or discarded battery and recycle

Please monitor the battery status when in use and in storage. If you find any broken batteries, electrolyte leakage, abnormal expansion or pungent odors due to shipping damage or abnormal vibration, please stop use immediately and keep at least a 5 meter perimeter around the effected batteries. Please dispose of the damaged batteries properly and contact a recycling company to recycle the batteries (See chapter 10 Instructions for disposal). For batteries that are under EP warranty policy, EP will access the warranty claim according to your submission of the battery nameplate photo.

During the period waiting for disposal or recycle, please stock damaged and old batteries carefully by following instructions:

1.Damaged and discarded battery temporary storage needs to be placed in an iron or plastic container with water that can cover whole battery at least 5 days (The battery may emit smoke when immersed in water. This is the process of consuming energy by the leaking battery, which is a normal reaction) .

- Keep the container and batteries outdoors and 5 meters away from other things, especially flammable items.
- Use protective gloves when putting batteries in or out of water.
- Do not stack damaged or old batteries.

2.For big battery with inner and outer boxes structure, Keep the batteries outdoors at least 5 days. and contact a recycling company to recycle the batteries.Place the faulty batteries outdoors in an openand shaded area, this area must be well-ventilated and be equipped with fire equipment.

i NOTE

Lithium-ion batteries that are damaged or in uncertain conditions shall only be handled by special trained and authorized lithium-ion battery technican.

⚠ WARNING

Dispose of faulty or discarded batteries in time;

⚠ WARNING

Do not store faulty or discarded for a long time.

⚠ WARNING

No load bearing, squeezing and contact stacking when storing faulty or discarded temporary;

⚠ DANGER

Do not place faulty or discarded near cargo warehouses or near flammable and explosive dangerous goods.

4.5 Commissioning

⚠ WARNING

Unsuitable batteries that have not been approved by EP for the truck can be hazardous The design, weight and dimensions of the battery have a considerable effect on the operational safety of the truck, in particular its stability and capacity. The use of unsuitable batteries that have not been approved for the truck by EP, can lead to a deterioration of the braking characteristics of the truck during energy recovery, causing considerable damage to the electric controller and resulting in serious danger to the health and safety of individuals. Only EP-approved batteries may be used on the truck. Battery equipment may only be replaced with the agreement of EP. When replacing/installing the battery make sure the battery is securely located in the battery compartment of the truck. Do not use batteries that have not been approved by the manufacturer.

If damage or other defects are identified on the lithium-ion battery, the lithium-ion battery must not be used until it has been properly repaired.

Report any defects immediately to your supervisor. Tag out the faulty lithium-ion battery and take it out of service. Do not return the lithium-ion battery to service until the fault has been identified and rectified. Inform the manufacturer's customer service department or a customer service organization authorized by the manufacturer.

- Check that the equipment is complete.
- Check the lithium-ion battery for damage.
- Check the battery cables and cable connections for damage and correct seating (if present).
- Install the lithium-ion battery if necessary

4.6 Charging

When charging, make sure the battery charger is turned OFF before connecting the battery charging cables. Lithium-ion batteries allow for fast charging, if the battery does not charge completely in a normal period or if the battery management system (BMS) indicates a fault, then remove the battery from service. EP recommends to opportunity charge lithium-ion batteries.

This is when the battery is recharged for short intervals during a shift period. It reduces or eliminates the need for long charging periods, changing batteries during a shift, and extending shift periods.

The positioning of chargers offers new possibilities compared to lead-acid batteries. For instance, they can be placed in parking spaces near break rooms. Furthermore, there is no hydrogen outgassing during the charging and discharging process, which contrasts with lead-acid batteries. During the charging and discharging process, no technical measures are needed for ventilation or air circulation due to the absence of hydrogen outgassing with lithium-ion batteries. However, fire protection regulations remain consistent with those for lead-acid battery chargers, requiring a minimum distance of 2.5 meters from combustible materials.

i NOTE

The workplace regulations must be observed (emergency exits, escape routes, traffic routes, ... must be kept clear).

⚠ CAUTION

- *No metal objects should be placed on the battery.*
- *Be careful of short-circuiting the battery!*
- *No modification of the lithium-ion battery connector;*
- *Do not use irregular charging sockets;*
- *The necessary extinguisher (yellow sand and powder fire extinguisher) should be equipped around the charger so that emergency extinguishing can be carried out under extreme conditions.*
- *Do not modify or disassemble the charging port and charging equipment, which may result in charging failure and fire.*
- *After the charging is finished, do not disconnect the charging device when it is wet or standing in the water, as this may cause electric shock and cause personal injury.*
- *To avoid damage to charger cord plug and receptacle, do not pull on charger cord plug. Do not twist, rock or bend plug sideways. Do not use if plug or receptacle is damaged. Loose or feels hot otherwise fire, property damage or personal injury may result.*
- *Connect only properly grounded AC outlet. Do not touch uninsulated protion of output connector or uninsulated battery terminal. Never try to change a frozen battery. There's the danger of explosion!*

⚠ WARNING

Charging must only be performed by individuals who are fully familiar with the relevant charging safety instructions.

4.6.1 Charging the battery

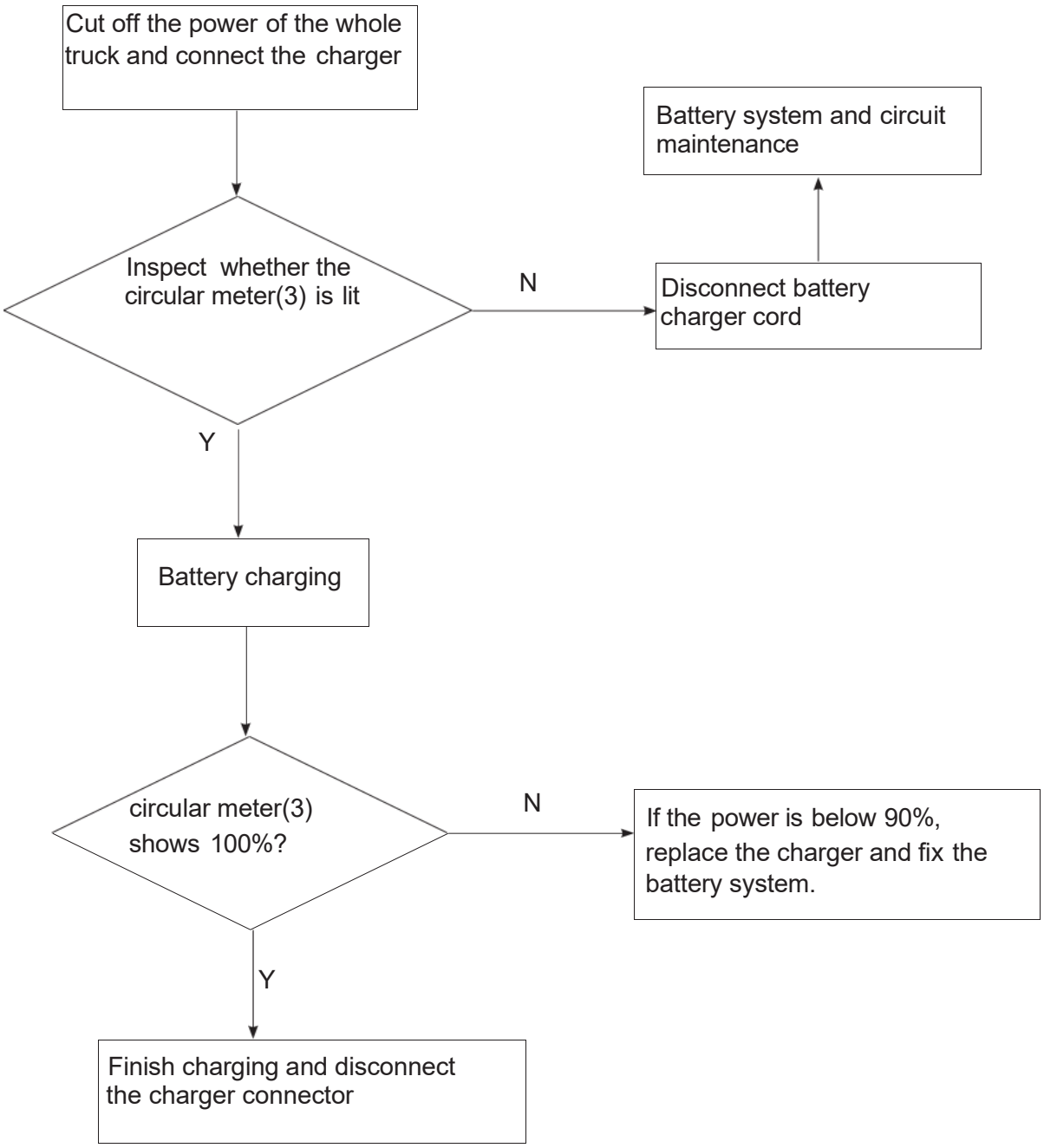

4.6.2 Discharging the battery

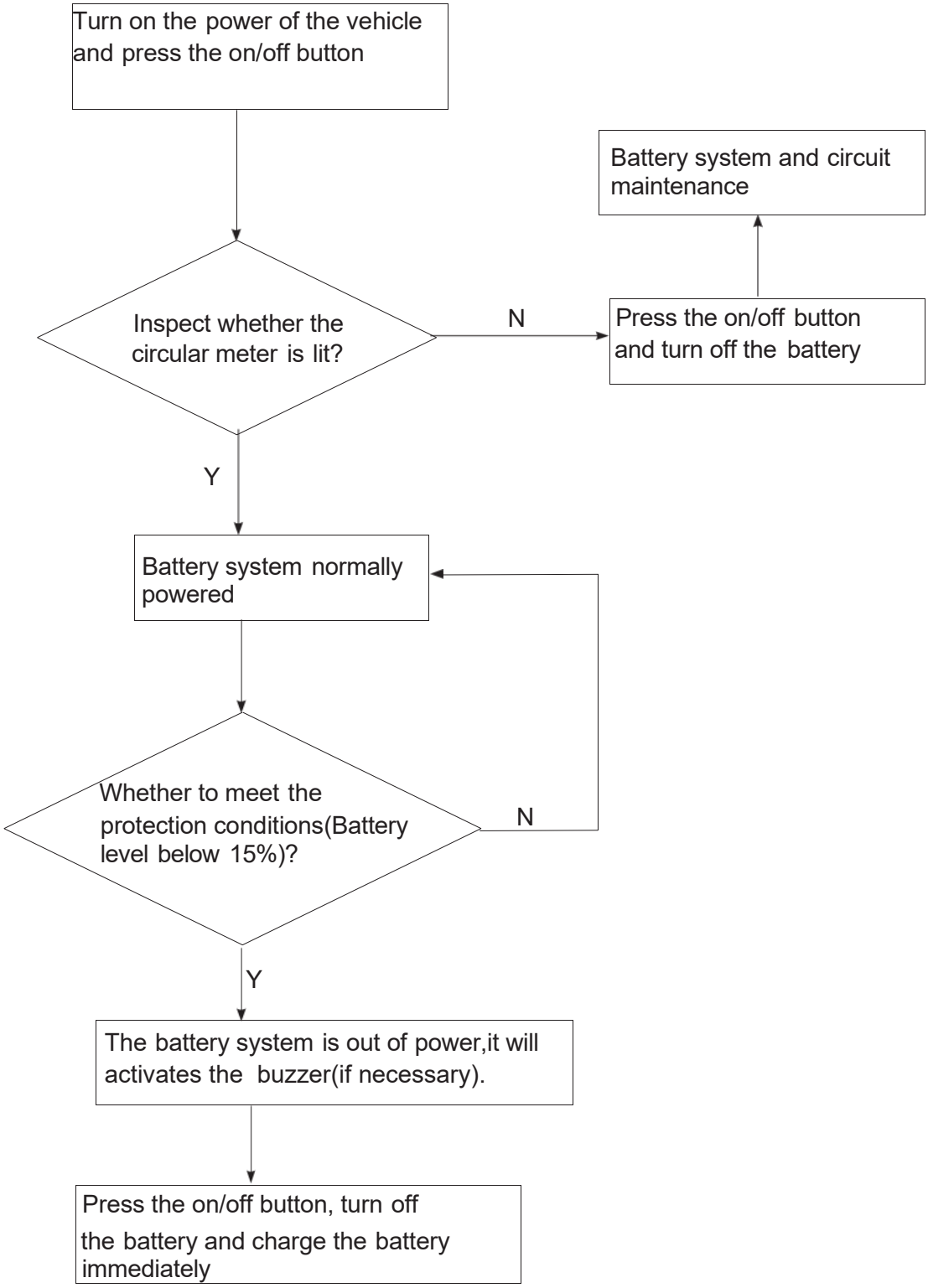

4.7 Transportation

Before transporting any lithium-ion battery,check the current regulations on the transport of dangerous goods.Comply with these when preparing the packaging and transport.Train authorised staff to dispatch lithium-ion batteries.

NOTE

It is recommended that the original packaging is kept for any subsequent dispatch.

A lithium-ion battery is a special product.

Special precautions should be taken when:

Transporting a truck packed with Equipment or Lithium batteries contained in Equipment

·Transporting only the lithium battery

·A class 9 danger label must be affixed to the packaging for transport.

It is different if the battery is transported on its own or in a truck.An example of a label appears in this supplement(see figure below).Refer to the latest current regulations before dispatch as the information might have changed since this supplement was written. Special documents must be sent with the battery.Refer to the applicable standards or regulations.The applicable IATA,ADR and IMDG regulations must be observed during transport.

For UN3480	Lithium-ion Batteries	Fig0000-000800M
For UN3481	Lithium-ion Batteries packed with Equipment or Lithium batteries contained in Equipment	

▲WARNING

Do not pack higher than 1.2m above the floor of the container and secure properly.

NOTE

"Overpack"is the name for the outer packaging of the dangerous goods.

G NOTE

Recharge the lithium-ion battery before transporting it taking account of the transport mode (sea,road,air).Excessive discharge on arrival could damage the performance of the battery.

4.7.1 Shipping faulty batteries

To transport these faulty lithium-ion batteries,contact the manufacturer's customer service department.Faulty lithium-ion batteries must not be transported independently.

4.8 Lifting by crane

⚠ WARNING

All persons involved in loading by crane must be trained.

- *Incorrect crane loading procedures due to untrained personnel can result in the battery falling. There is a risk of injury to personnel and a risk of material damage to the battery.*
- *Loading must only be performed by specialist personnel trained for this purpose.*
- *The specialist personnel must be instructed in securing loads on road vehicles and handling load securing devices. In each case correct measurements must be taken and appropriate safety measures applied.*

⚠ WARNING

Improper lifting of the battery by crane can cause accidents.

The use of unsuitable lifting gear and the improper use of correct lifting gear can cause the battery to fall when being lifted by crane.

Prevent the battery from striking other objects when they are being raised, and avoid any uncontrolled movement. If necessary secure the battery with guide ropes.

- *The battery should only be laden by people who are trained in handling lifting slings and lifting equipment.*
- *Wear personal protective equipment (e.g. safety boots, helmet, hi-vis jacket, protective gloves etc.) when loading by crane.*
- *Use the lifting slings only in the prescribed load direction.*
- *Always attach the crane lifting gear to the prescribed strap points and prevent them from slipping.*
- *Avoiding diagonal pull*
- *When lifting the lithium-ion battery, ensure that the battery remains level.*
- *Ensure that no one is in the working range of the hoist when using it to lift the battery!*
- *Walking around under the lifted battery is absolutely prohibited.*
- *Use lifting equipment and a hoist that has sufficient carrying capacity to lift the batttery. For the batttery weight , see section nameplate data for lithium-ion battery.*
- *The sling must be fastened at the designated lifting points(handle) when using the hoist.*

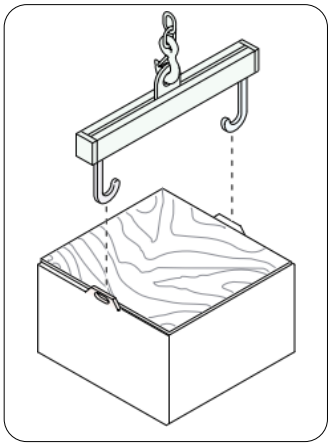

4.9 Removing or installing the battery

When moving, installing, or removing the battery, do the following:

- Ensure the service area is equipped with the proper tools designed for moving industrial batteries, such as a conveyor or overhead hoist.
- Use lifting hooks that have safety latches and are the correct size.
- Use a specialized attachment device, such as an insulted spreader bar, to install the lifting device to the battery. The width of the spreader bar must be the same as the width of the battery, to prevent damage to the battery.
- Chain hoists must be equipped with containers to accumulate any excess lifting chain.
- Keep all tools and other metal objects away from the battery terminals.
- Only authorized personnel familiar with handling industrial batteries move, store, install, or remove the battery.
- Use insulated tools and lifting equipment only.
- If installing a new battery, check the battery for damage before installing.

⚠ WARNING

Risk of short-circuits during removal and installation of the lithium-ion battery

Battery cables can be trapped or severed when lifting out the battery. If the contactor inside the lithium-ion battery is closed in the event ofa fault, the battery voltage exists between the battery terminals. This presents a risk of short-circuits (live parts).

The short-circuit produces a high electric current. This current can lead to dangerous current flows through the body, burns or electric arcs.

- *Only have the lithium-ion battery installed and removed by authorised maintenance personnel.*
- *Remove any rings, metal wristbands etc.*
- *Wear personal protective equipment (e.g. safety gloves, safety shoes, hi-vis jacket, hard hat).*
- *Position the battery connector, plus and minus cables such that they cannot be trapped or severed.*
- *Do not place any objects or tools on the lithium-ion battery to avoid short-circuiting the battery.*

⚠ WARNING

Risk of crushing during removal and installation of the lithium-ion battery

Due to the weight of the battery, there is a risk of crushing of the arms and legs when removing or installing the lithium-ion battery.

- *Only have the lithium-ion battery installed and removed by authorised maintenance personnel.*
- *Remove any rings, metal wristbands etc.*
- *Wear personal protective equipment (e.g. safety shoes, hard hat, hi-vis jacket, protective gloves).*
- *Park the truck securely on level ground before installing or removing the lithium-ion battery.*
- *In exceptional circumstances (e.g. defective brake), place wedges underneath the wheels to prevent the truck from rolling away.*
- *Do not place any parts of the body between the lithium-ion battery and the truck or ground.*
- *Note the centre of gravity of the battery.*
- *Only use crane lifting gear with sufficient capacity when replacing the battery.*
- *Use only approved battery replacement devices (e.g. battery roller stand, battery replacement station).*
- *Insert battery retainers after installing the lithium-ion battery in the battery compartment.*
- *Check that the battery is securely seated in the battery compartment.*

4.10 Instructions for disposal

- Lithium ion batteries must be disposed of in accordance with the relevant environmental protection regulations.
- Used cells and batteries are recyclable economic goods. In accordance with the mark showing a crossed rubbish bin, these batteries may not be disposed of as domestic waste. Return and / or recycling must be ensured as required by the Batteries Legislation.
- The method of battery recovery and reuse can be discussed with our company.
- We reserve the right to change the technology.

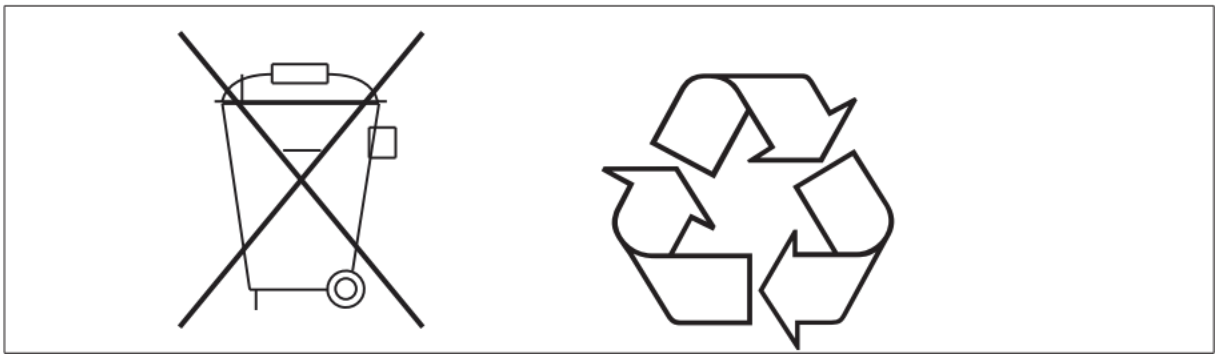

4.10.1 The requirements of recycling

- Only authorized EP dealers who have attended the after sales training, are authorized to do repairs on EP batteries.
- All Li-ion battery should be placed in safe place according to the EP Li-ion battery Manual;
- The transport of Li-ion battery must meet local regulation, EP will supply UN38.3 and MSDS files according with UN and ADR regulation;
- The package of Li-ion battery before delivery must meet the UN 3480 or local carrier regulation;

4.11 Storage

Before a long period of inactivity, the battery must be fully charged.

- We recommend that batteries are stored at a height between 60 and 120 cm. EP recommends storing lithium-ion batteries in a raised rack or shelf that allows for protection from possible collision damage.
- Store the battery in a dry place at a temperature between 0 and 40° and a maximum humidity of 85%. Lithium-ion batteries should be stored indoors, away from heat sources and direct sunlight, and in a well-ventilated;
- When storing a battery for an extended period, inspect it regularly (every 1 months) and maintain a charge level of 50% or greater.
- Disconnect the lithium-ion battery from the truck if it is to remain unused for longer than a week (e.g. detach the battery connector / interface connector).

⚠ CAUTION

Discharge can damage the battery

If the battery is not used for a long period of time, it can become damaged through discharge.

⚠ WARNING

Do not store the faulty or discarded battery for a long time;

⚠ WARNING

No load bearing, squeezing and contact stacking when storing the batteries;

⚠ DANGER

Do not place the batteries near cargo warehouses or near flammable and explosive dangerous goods.

4.12 Cleaning

The manufacturer recommends to only use compressed air at less than 207 kPa (30 psi) or a slightly damp towel to clean the battery. The battery, or its charging station, may be equipped with fans, heat sinks, or other cooling devices that require periodic cleaning. Always know and follow the battery manufacturer's recommendations for cleaning and service.

5 Troubleshooting

5.1 Common Problems and Solutions

During the use and maintenance of the lithium-ion battery, the battery or battery system may have one or more of the following abnormal conditions, please organize the professional engineers and technicians to perform the necessary processing according to the instructions in this manual; if you have any questions about the status or solutions, please contact ep dealer or after-sales service department of the company to obtain professional technical support.

- If the battery is found to have abnormal mechanical characteristics such as swelling, cracked casing, melted casing, and distortion of the casing before and during installation, stop using the battery immediately, place it in open and well-ventilated space, and contact the after-sales service.
- If abnormalities such as looseness, cracks, cracks in the insulation layer, burn marks, etc. of the battery's pole pressing bolts, conductive strips, main circuit wires and connectors are found before and during the installation, stop using the battery immediately, check the reason for analysis and give it a fix;
- If the polarity of the positive and negative terminals of the battery is found not match the polarity identification before installation, please stop using the battery immediately and contact the after-sales service department to replace the battery or obtain other solutions;
- If the battery is found to emit smoke or fire:

5.2 Emergency measures for battery pack smoke or fire

5.2.1 Overheating warning

- When the battery temperature is higher than 60°C, the battery reports the fault code: 17A104 (for batteries with round gauges). The driver should end the operation, drive to a safe area, open the protective cover and expose the battery to cool down; the cooling area should be equipped with fire extinguisher.
- When the battery temperature is higher than 65°C, the battery reports fault codes: 17A040, 17A041, 17A042, 17A043, 17A044, 17A045, 17A181 (for batteries with round gauges) depending on the locations of the high temperature. The driver should end the operation, quickly evacuate the crowd, open the protective cover and expose the battery. Also prepare a fire extinguisher and water, ready to respond to abnormal battery problems.

5.2.2 Smoke and fire burning and exploding

- When the battery smokes, please notify personnel to leave the faulty vehicle quickly and immediately implement power-off operation and use carbon dioxide or dry powder fire extinguisher to cover the battery with oxygen isolation. Then move the faulty battery to an open area according to the site conditions and repair or recycle the battery. If you meet complex problems, please call the after-sales service for advice.
- To deal with batteries with open flames, operators should also immediately power off the batteries and use carbon dioxide or dry powder fire extinguishers to suppress the fire as well as water-based extinguishers to cool it down. Place in an open area at least 5 meters away and repair or recycle as appropriate. In accordance with the relevant regulations of the environmental protection department, the damaged battery must be recycled within 5 days.

- For vehicles with people trapped in the fire, adhere to the principle of "saving people first, scientific rescue" and carry out simultaneous demolition, fire-fighting and rescue operations.
- Depending on the site environment and the fire, judge whether to carry out a stabilization operation on the vehicle on fire, and if possible, use other forklifts to move the burning forklift to an open area.
- Use a fire-filtered integrated gas mask or air breathing apparatus, as appropriate, to provide respiratory protection to trapped personnel.
- When the fire cannot be effectively controlled, fire blankets and other equipment can be used to protect the trapped personnel to avoid injury to the greatest extent possible, and to quickly use breaking (breaking process is strictly forbidden to blindly penetrate the battery pack, cutting, prying open operations to avoid increasing the fire and electric shock), lifting and other life-saving equipment to launch rescue operations.
- Firefighters should extinguish fires in vehicles where no personnel are trapped at a distance of 10 to 15 meters from the vehicle on fire.
- When protective components are usually present around the battery pack and the whole vehicle after adaptation, and it is difficult to spray directly to the point of ignition. A large amount of water should be used to cool the exterior of the battery pack sufficiently to prevent the spread of fire.
- Move the damaged battery to an open and safe area and evacuate the surrounding area quickly, to reduce the spread of damage to people and property.
- Due to the flammable and polluting nature of electrolyte fumes and vapors, keeping away from people also serves to reduce secondary hazards caused by starting fires.
- Quickly remove combustible materials near a battery that has spontaneously combusted to avoid causing a wider fire.
- If permitted, the battery pack can be removed from the vehicle and buried directly into the earth or sand to prevent the battery from re-igniting and exploding and to prevent the spread of smoke and dust. And a large amount of water should be used for cooling. If not permitted, the battery should be continuously cooled down by water spraying after the open fire is extinguished until the battery temperature drops below 60°C and the risk of re-ignition and explosion is assessed before the rescue operation can be stopped.

Lithium-ion batteries typically require no maintenance. If needed, any service or maintenance should be performed by a certified technician.

3000A series

Battery charger from WEIHAI TL POWER CO., LTD.

Operation Manual

V1-07.24
(en-GB)

Foreword

By carefully reading the operating instructions, the user can acquire the necessary technical knowledge to safely operate the charger. The operating instructions contain concise and well organized information sections are arranged alphabetically, and page numbers are numbered.

The company will continue to develop chargers therefore, Manufacturing company must reserve the right to modify the appearance, equipment, and technology. For these reasons, no claims for any device-specific performance may be derived from the contents of these operating instructions.

Safety notices and text mark-ups

Safety instructions and important explanations are indicated by the following graphics:

⚠DANGER

Means that failure to comply can cause risk to life and/or major damage to property.

⚠WARNING

Please strictly adhere to these safety instructions to avoid personal injury or major damage to equipment.

⚠CAUTION

Please pay attention to the important safety instructions.

NOTE

Pay attention to Instruction.

ALL RIGHTS RESERVED

2024.07 01st EDITION

Content

1 General 2
1.1 Introduction 2
1.2 Important safety tips 2
1.3 Permissable operating conditions 4
1.4 Intended use 4
1.5 Impermissible use 4
2 Charger description 6
2.1 Charger appearance 6
2.2 Feature description 6
2.3 Description of how it works 6
2.4 Charger parts information 8
2.5 Outline drawings 10
2.6 Technical data sheets of 3000A series chargers 11
2.7 Model description 12
2.8 Nameplates and logotype 12
2.9 Enforce the standard 14
2.11 DC Output connectors 16
3 Safety 17
3.1 Safety tips for installation 17
3.2 Use safety reminders 19
3.2.1 Pre-use safety reminders 19
3.2.2 Run and operate safety reminders 20
3.3 Service Safety Reminder 21
3.4 Maintenance safety tips 22
4 operation 23
4.1 Installation 23
4.1.1 Disassemble the box 23
4.1.2 Grid safety devices 23
4.1.3 Install the charger 24
4.2 Operators Daily Checklist 26
4.3 Run the charger 27
4.4 Working status 29
4.5 Running curves 30
4.6 Once the operation is complete 30
5 Description of the fault 31
5.1 Lead battery fault table 31
5.2 Simple breakdown repairs 31
5.2.1 Fault 1: Abnormal charging machine 31
5.2.2 Fault 2:Battery abnormality 32
5.3 Service support 33
6 Waste disposal 34

1 General

1.1 Introduction

This operation guide helps the model to use 3000A4850L models of 48V50A charger as a reference object to achieve safe operation of the charger specifications.

This manual must be readily available and kept in a prepared place This manual is intended for use by all persons who have access to the operating process of the charger, including transportation, installation and installation, operation, maintenance, and disassembly.

In commercial use, in addition to the operating instructions, the relevant guidelines, regulations, and laws in force in the place of use or the country of use should be followed to ensure safe and standardized operations.
Information other than this operating manual is provided by a professional on the part of the manufacturer or supplier.

All materials are protected by copyright Without express authorization, it is forbidden to retransmit and reproduce the material and its excerpts, to quote and disseminate its contents.

Obligations and Responsibilities of the User of the Equipment: In this Manual, the term "User" refers to any natural or legal person who directly uses or appoints another person to use the Equipment In special cases such as rental, sale or rental, "Equipment User" represents a party that has specific operational obligations under the terms of the contract concluded between the Owner of the Equipment and the User.

In addition, the user of the equipment must strictly comply with the provisions for the prevention of accidents, other safety technical regulations, and guidelines for the use, maintenance and repair of the equipment The user must ensure that all operators carefully read and fully understand the contents of this manual.

The Company shall not be liable for any damages arising from the improper operation of the equipment by the customer or the user of the equipment or a third party without the permission of the Company's customer service department.

If additional equipment needs to be installed or added, and if it affects or complements the functionality of the equipment, prior written consent must be obtained from the manufacturer and, depending on the actual situation, approval from the relevant certification body may also be required.

1.2 Important safety tips

The charger is produced in accordance with EU directives and state-of-the-art technology and provides additional safety tips to ensure the absolute safety of personnel.

⚠DANGER

- The following conditions can result in serious personal and property damage：
- Improper use or incorrect operation.
- Turn on the charger without permission.
- Installation errors or improper maintenance and repairs .
- Replace the input and output wires without permission.
- Charge the damaged battery.

⚠DANGER

Attention must be paid to and all instructions contained in this operating instruction regarding proper use, residual risks, installation, operation, and maintenance.

⚠DANGER

Charging a battery that is not suitable for this charger will cause damage to the charger and battery The battery will swell or burst:

- It can only charge EP brand electric industrial forklift batteries.
- Please determine the battery type that the charger is compatible with before use.
- Do not cross-use or change the charger adaptation type.

⚠ WARNING

Dangerous voltage warning

Chargers are electrical devices in which voltage and current can endanger personal safety:

- The charger should only be operated by a trained and authorized professional.
- Before intervening in the charger or working on the charger, the power supply should be disconnected and if necessary, the battery should be disconnected.
- The charger can only be opened and repaired by EP Customer Service.

⚠ WARNING

Damage or other defects in the charger can lead to accidents

If it is determined that there are safety-related changes, damage, or other defects in the charger or in performance, the charger must not be used until repairs have been carried out in accordance with the Regulations:

- Identified deficiencies must be reported to the EP immediately.
- Mark the damaged charger and deactivate it.
- The charger should only be reused after the fault has been identified and troubleshooting.

⚠ CAUTION

This charger is not suitable for use by:Persons (including children) with impairments in physical, sensory, or mental abilities, or lack of electrical experience and knowledge system and battery charging unless someone supervises or instructs them in using the charger Be responsible for their safety Children should be supervised to ensure they are not playing with the charger.

1.3 Permissable operating conditions

This series of chargers is suitable for charging industrial lithium batteries Any other use of the equipment is non-compliant and may result in injury, damage to the equipment, or other property damage:

- The rated operating input voltage range, frequency range, maximum input current, and input power are all specified in detail on the nameplate .
- The rated working output voltage range, current range, and constant power are all specified in detail on the nameplate.
- Used in industrial environments .
- The permissible temperature range is between -10°C and 45°C .
- Relative humidity is 5%~95%.
- The altitude should not exceed 2000 m .
- Input voltage fluctuation range of ±15% .
- Storage temperature: -20 °C~75 °C.
- Storage humidity 5%~95%.

Note: When the environmental conditions exceed the above range, you should contact us in advance to negotiate and solve.

1.4 Intended use

- Damage and other defects to the charger or accessories must be reported to the supervisor immediately. Chargers and accessories that are not safe to operate should not be used until they have been properly serviced.
- Safety installations and switches may not be removed or rendered unusable. Specified settings may only be changed with the approval of the manufacturer.
- The charger must not use more than the limit set by the manufacturer, and the fluctuation range must not exceed ±15%.
- Warning signs need to be added to the charger working area.
- In order to maintain LVD compliance with EMC, any replacement of exterior parts requires prior contact with the manufacturer.
- When using the utility grid, the regulations must be followed, as well as country-specific restrictions for winter.

1.5 Impermissible use

- If the charger is used in a way that is not permitted, the user, not the manufacturer, is responsible. The following list is for informational purposes only and is not intended to be exhaustive:
- Charge commercial batteries.
- Charge non-EP brand batteries.
- Modify or destroy safety devices.
- Modification or replacement of unauthorized parts.
- Extend or shorten the AC/DC end cable.
- The usage environment is beyond the scope of Section 1.3.
- Personnel have not undergone safety training or have not consulted the instructions for operation.

1.6 Definition of the person who is used

1.6.1 Operator

The charger should only be operated by a person who is at least 18 years of age, has been trained in electrical safety and operational safety, and who demonstrates their basic electrical skills to the user or an authorized representative. It is also necessary to have a specific understanding of the working logic of the charger to be used.

1.6.2 Users

The user is the natural person or legal entity responsible for pumping the charger. Users can operate the charger themselves or delegate the task of operating the charger to someone else, such as an operator. In the case of specific cases such as rentals, the liability is borne by the user in accordance with a valid contract between the owner of the car and the operator of the charger.

1.6.2 Specialist

A qualified person is defined as a service engineer or a person who meets the following requirements:

- Full professional qualifications that demonstrate their expertise. The certificate should include a professional qualification or similar document.
- Professional experience shows that the qualified person has gained hands-on experience with the charger during their career During this time, the person has become familiar with the various symptoms that need to be examined, such as based on the results of hazard assessments or routine inspections.
- Recent professional involvement in the field of relevant charger testing or R&D and appropriate further qualification is essential. Qualified personnel must have experience in conducting relevant tests or conducting similar tests.
- In addition, the person must be aware of the latest technological developments and the risks being assessed for the charger to be made.

1.6.3 User right,duties and rules of behaviour

Everyone operating the charger has read and understood this manual and has been approved with the relevant charger operator training. Operate the charger in a safe manner so as not to endanger the life and health of the operator and/or others. Follow all warnings and instructions in this manual This manual is available for use by the operator.

1.6.4 Operator Rights, Duties and Code of Conduct

For the purposes of these operating instructions, the operating company is defined as any natural or legal person who uses the charger on its own or on its behalf. In exceptional cases (e.g. lease or rental). The operating company is considered to be a person who performs specific operational duties under an existing contractual agreement between the charger owner and the operator.

The operating company must ensure that the charger is used only for its intended purpose and to prevent danger to the health and safety of the operator and third parties. In addition, accident prevention regulations, safety regulations, and operation, maintenance, and repair guidelines must be complied with. The operating company must ensure that all operators have read and understood these operating instruction

2 Charger description

2.1 Charger appearance

2.2 Feature description

The fixed OBC charger is characterized by small size, high conversion efficiency, and a higher level of IP protection, which makes it suitable for a wider range of environments, and it also has power-off compensation and fault indicators to make the charging status clear at a glance. The charger adopts forced air cooling cooling, and has the functions of input over-voltage, under-voltage protection, output over-voltage, under-voltage, over-current, output short circuit, fan fault protection and so on.

2.3 Description of how it works

2.3.1 Design Principles

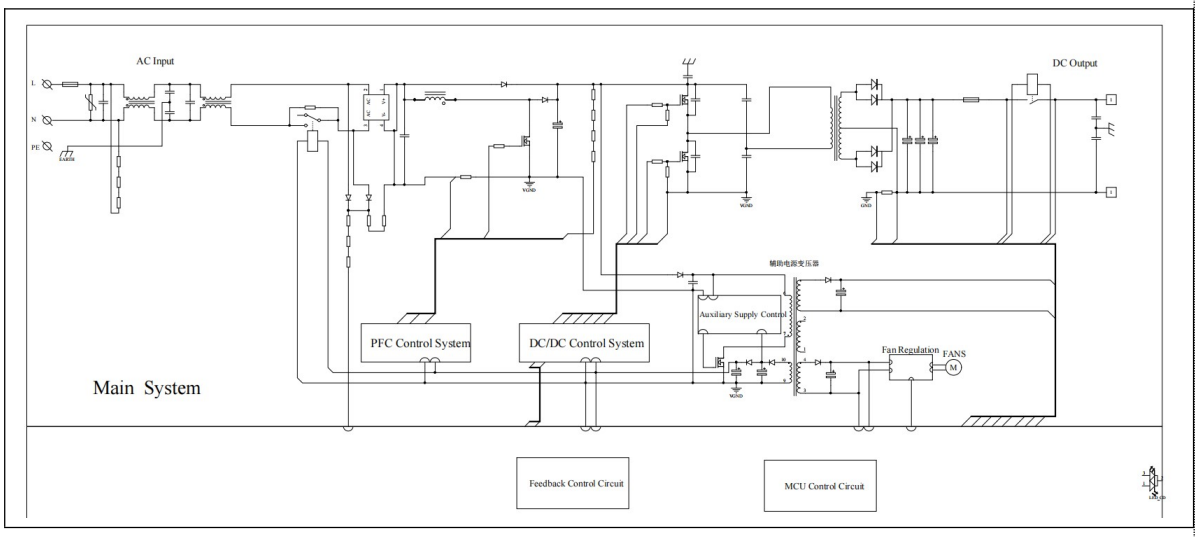

2.3.2 How it works

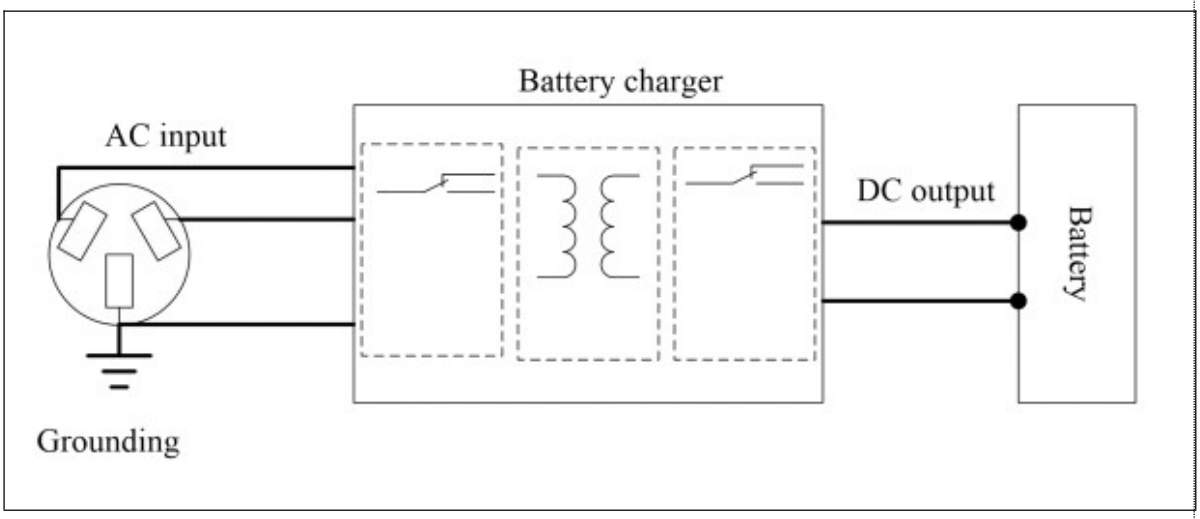

The implementation principle of the high-frequency PFC (Power Factor Correction) module charger generally follows these steps:

Input current rectification: Firstly, the AC input power is rectified into a DC power source.
High-frequency conversion: The DC power source is converted into a high-frequency AC power source, typically achieved through high-frequency switching power supplies using devices such as MOSFETs.
PFC control: The PFC controller monitors the input current and voltage and controls the high-frequency switch to minimize the phase difference between the input current and voltage, thereby maximizing the power factor.

DC-DC conversion: The power source, after power factor correction, enters a DC-DC converter to convert the high-frequency AC power into the desired DC voltage. This typically involves an inductor, a capacitor, a switching element (such as a MOSFET), and control circuitry.

Control and protection: The charger also includes control and protection circuits to ensure that the output voltage and current are within safe ranges and to monitor various conditions during the charging process, such as overvoltage, overcurrent, overtemperature, etc., and take appropriate measures to protect the charger and battery.

2.4 Charger parts information

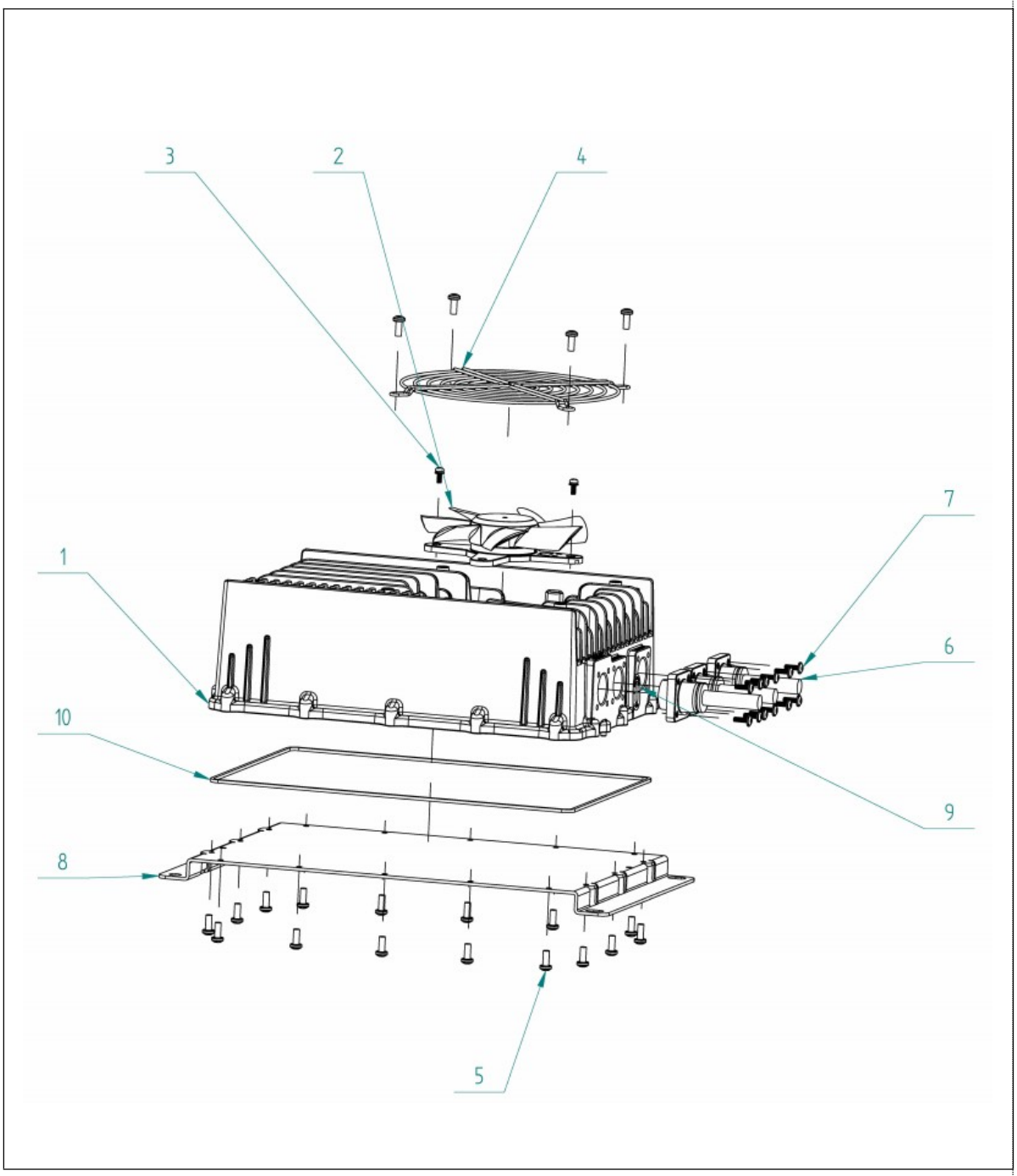

Applicable Models	3000A 48V/50A
	3000A 80V/25A
	3000A 80V/35A

No.	NAME	DRAWING NO./SPECIFICATION	QTY
1	Die cast shell	YZ-3300A-271-A_V1.0	1
2	Fan	12025-zhijia_asm	1
3	Screw	M3x8_ gasket with a diameter of 6mm _ stainless steel _ three combination	2
4	Fan mesh cover	150 fan mesh cover	1
5	Screw	M4-10 self tapping	20
6	Microcard	PS-WK32-A_V1.0	3
7	Screw	M3x11_stainless steel	12
8	Cover plate	RC-3300A-315-LGY-B_V1.0	1
9	label	Elliptical two-color indicator light label	1
10	seal ring	3000A sealing ring _ sky blue RAL5015	1
11			
12			
13			
14			
15			
16			
17			
18			
19			
20			
21			
22			

2.5 Outline drawings

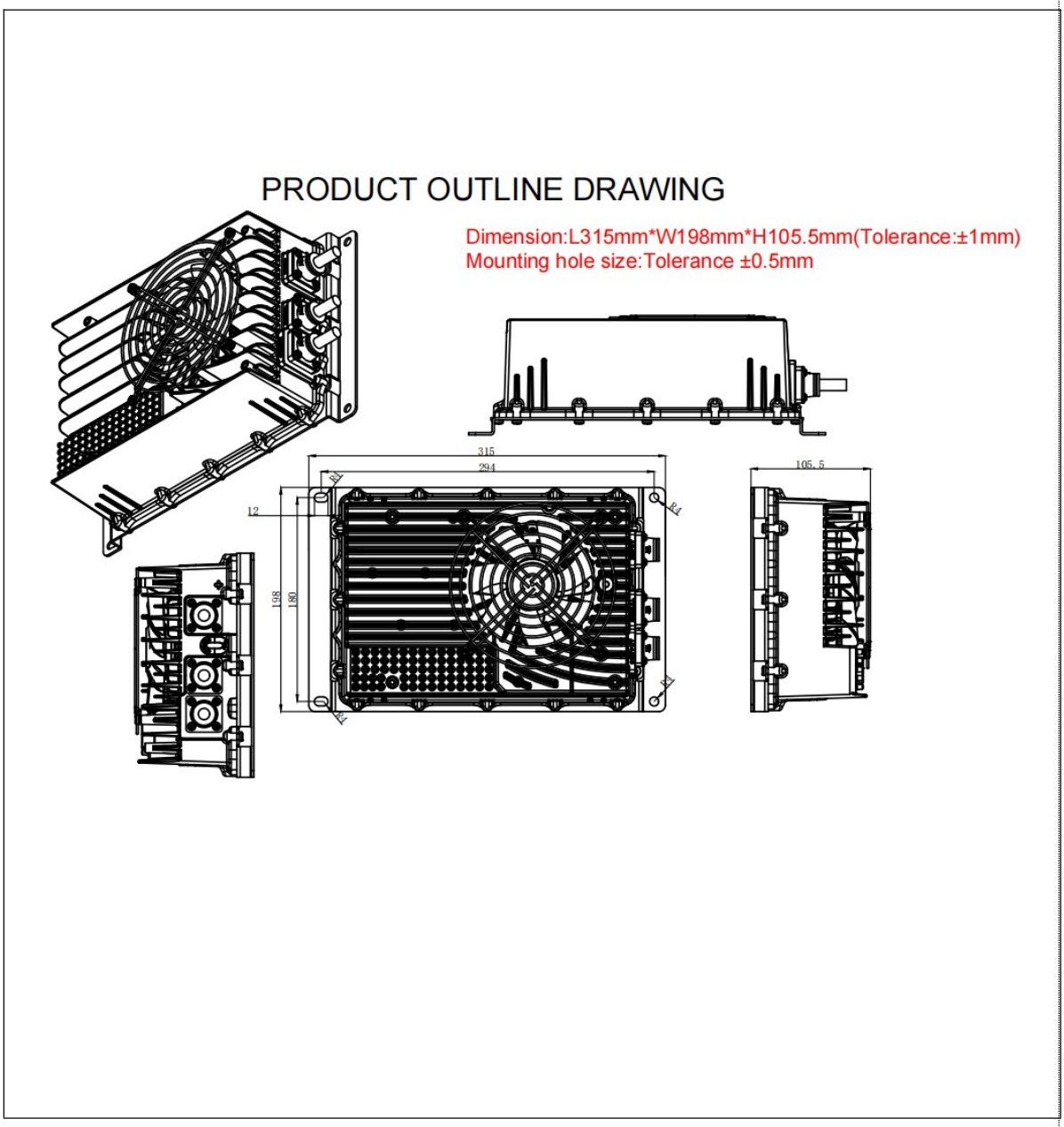

Applicable Models	3000A 48V/50A
	3000A 80V/25A
	3000A 80V/35A

NOTE: ALL STANDARD SIZES ARE IN MM

2.6 Technical data sheets of 3000A series chargers

2.6.1 Charger appearance parameter table

Name Model	3000A		
	48V50A	**80V25A**	**80V35A**
volume (mm)	L:315 W:198 H:105.5	L:315 W:198 H:105.5	L:315 W:198 H:105.5
WEIGHT (KG)	8±0.5	8±0.5	8±0.5
AC input (plug)	16	15	16
DC output	73	103	103
Enter the wire (mm²)	3*2.5	3*2	3*2.5
Output wires (mm²)	1*10+1*10 +4*0.5	1*10+1*10 +4*0.5	1*10+1*10 +4*0.5
IP rating	**IP65**		

2.6.2 Electrical performance parameter table

Name Model	3000A		
	48V50A	**80V25A**	**80V35A**
Input Voltage (AC)	170-270	170-270	170-270
Input current Max (A)	15	9.5	15
Input current Rated (A)	15	9.5	15
Operating frequency (hz)	45-65	45-65	45-65
Input power (KW)	3.278	2.15	3.278
Output voltage (DC)	73	103	103
Output current (A)	50	25	35
Output power (KW)	2.95	2	2.95
Power factor (PF)	0.99	0.99	0.99
Operating noise (db)	≤45(measured working noise of the charger assembly at a distance of 1m from the horizontal position of the noise source and a height of 1m to 1.5m from the ground, under the condition of rated load and ambient noise not exceeding 40dB).		

2.6.3 Electrical function parameter table

Name Model	3000A		
	48V50A	**80V25A**	**80V35A**
Phase-loss protection	V		
Input undervoltage protection	V		
Input overvoltage protection	V		

Output undervoltage protection	V
Output overvoltage protection	V
Input overcurrent protection	V
Short-circuit protection	V
Reversepolarity protection	V

2.6.4 Work environment support

Name Model	3000A		
	48V50A	80V25A	80V35A
Voltage adaptive（%）	±15		
Work Scenario	indoor		
Operating temperature（℃）	-25~60		
Operating humidity（g/m³）	10-92		
elevation（*m）	2000		
Dust level	IP65		

2.6.5 Safety performance

Name Model	3000A		
	48V50A	80V25A	80V35A
Leakage current（ma）	＜10		
Ground resistance（Ω）	＜0.1		
Transient over-voltages（V）	50		
Insulation resistance(Ω)	＞50M		
Insulation withstand voltage	3000		

2.7 Model description

Take model 3000A4850L as an example:

The "3000A" part indicates the maximum power output of the charger is 2950W.

The "4850" part indicates that the charger output voltage is rated at 48V and the current is 50A.

The "L" part indicates that the charger is adapted to the lithium battery and can only be a lithium battery charger.

2.8 Nameplates and logotype

MODEL:3000A4850L ITEM:A	
INPUT:185-265Vac 50/60Hz Max.14.5A 3278W	
OUTPUT:DC54.75V-50A	
BATTERY TVPE: LFP Lithium battery 54.75V	
Serial NumberZJZL4850-341500003	
Weight:	
Serial Number:	Manufacture Date:
Manufacturer: Weihai Tl Power Co.. Ltd. No.1 shanhai Rd., chucun Town, High-tech Zone, Weihai City, Shandong Province, P.R. China	
Importer：EP Equipment Europe Address：Gustave Demeurslaan 69 -bus A1.1654Huizin gen, Belgium	

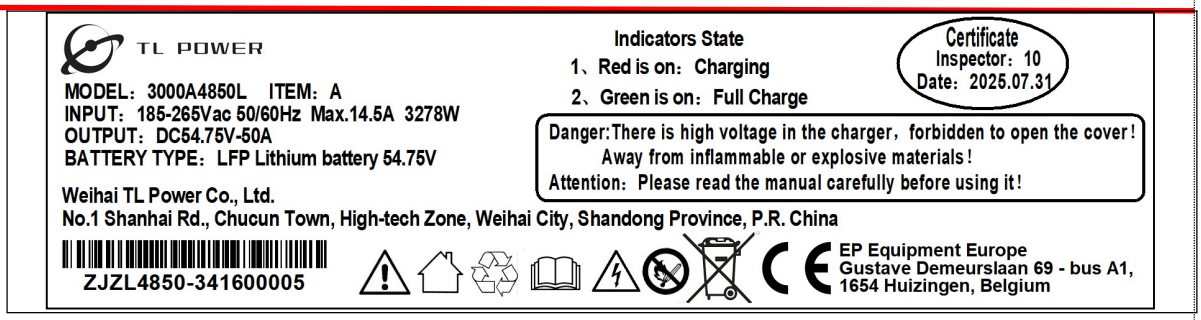

MODEL:3000A8025L ITEM:A	
INPUT:185-26Vac 50/60Hz Max.9.5A 2150W	
OUTPUT:DC87.6V-25A	
BATTERY TVPE: LFP Lithium battery 87.6V(HEAT)	
Serial NumberHBZLJX8025-342000031	
Weight:	
Serial Number:	Manufacture Date:
Manufacturer: Weihai Tl Power Co.. Ltd. No.1 shanhai Rd., chucun Town, High-tech Zone, Weihai City, Shandong Province, P.R. China	
Importer：EP Equipment Europe Address：Gustave Demeurslaan 69 -bus A1.1654Huizin gen, Belgium	

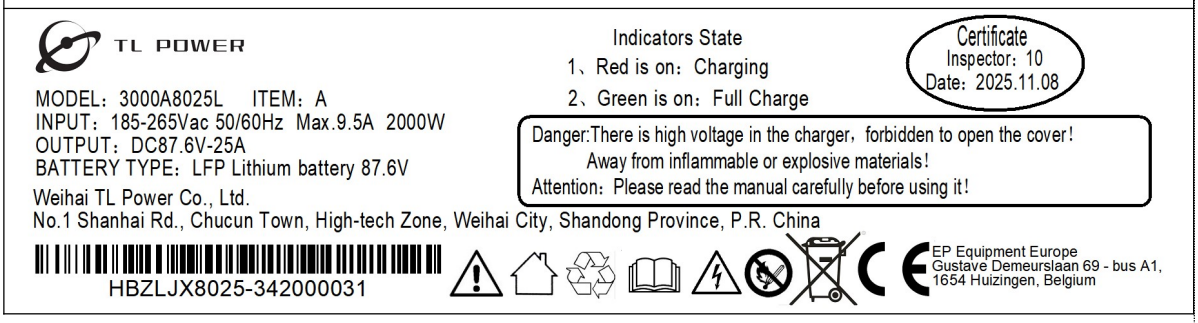

MODEL:3000A8035L ITEM:A	
INPUT:185-26Vac 50/60Hz Max.13.5A 3278W	
OUTPUT:DC87.6V-35A	
BATTERY TVPE: LFP Lithium battery 87.6V(HEAT)	
Serial NumberZJZL8035-341500003	
Weight:	
Serial Number:	Manufacture Date:
Manufacturer: Weihai Tl Power Co.. Ltd. No.1 shanhai Rd., chucun Town, High-tech Zone, Weihai City, Shandong Province, P.R. China	
Importer：EP Equipment Europe Address：Gustave Demeurslaan 69 -bus A1.1654Huizin gen, Belgium	

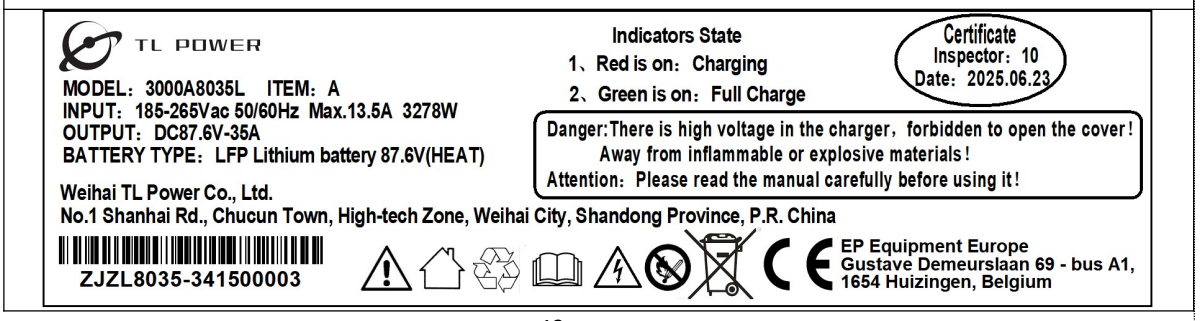

2.9 Enforce the standard

The charger is designed and manufactured in accordance with the technical specifications that have obtained the following technical certifications Therefore, when used correctly, it does not pose a threat to the safety and health of operators or third parties.

The charger is CE marked The necessary isolation spacing must be observed All circuits use primary and secondary protection devices, which are protected by a set current intensity and trigger characteristics.

All live components are fitted with a housing or cover that can only be loosened with a tool All cables and plugs are shielded and grounded as specified The charger is designed to comply with the IP 65 protection rating.

All metal parts are grounded by a ground wire system.

The charger is equipped with a CAN safety function that prevents the battery from overcharging by means of information recognition.

Standard table

serial number	Standard number	Standard name
1	IEC 60512-6-4:2002	Dynamic stress test
2	IEC 68-2-27	Impact test
3	IEC 61000-4-2	Electromagnetic Compatibility Test & Measurement Technology Electrostatic Discharge Immunity Test
4	IEC 61000-4-3	Electromagnetic Compatibility Test & Measurement Technology RF Electromagnetic Field Radiated Immunity Test
5	IEC 61000-4-4	Electromagnetic Compatibility Test and Measurement Technology Electrical Fast Transient Burst Immunity Test
6	IEC 61000-4-5	Electromagnetic Compatibility Test & Measurement Technology Surge (Shock) Immunity Test
7	IEC 61000-4-6	Electromagnetic Compatibility Test & Measurement Technology RF field-induced immunity to conducted disturbances
8	IEC 61000-4-11	Electromagnetic compatibility test and measurement technology voltage
9	IEC 61000-6-1	Generic standards - Immunity standard for residential, commercial and light-industrial environments
10	IEC 61000-6-2	Common Criteria - Immunity to Industrial Environments
11	IEC 61000-6-3	Generic standards - Emission standard for equipment in residential environments
12	IEC 61000-6-4	General Criteria - Emission standards for industrial environments
13	IEC 60529:2001	Enclosure rating
14	EN 50699	Recurrent Tests of Electrical Equipment
15	CEC-400-2017-002	2016 APPLIANCE EFFICIENCY REGULATIONS

series of chargers is optional, you can choose the corresponding AC power cord according to the power of the charger and the use area, we provide the following optional models.If the following plugs do not fit for your region, please contact us.

2.10 AC input plug

Power cord model list 1

Model	Compatible charger	AC wire diameter	Plug photo
Straight European Standard 10A	≤24V50A ≤48V25A	1.5mm*3	
Spring line European Standard 10A	≤24V30A ≤48V15A	0.75mm*3	
Spring line Italy 10A	≤24V50A ≤48V25A	1.5mm*3	
Straight line Italy 10A	≤24V30A ≤48V15A	0.75mm*3	
Spring line British standard 13A	≤24V30A ≤48V15A	0.75mm*3	
Spring line Australian standard 10A	≤24V30A ≤48V15A	0.75mm*3	
Straight line Australian standard 10A	≤24V50A ≤48V25A	1.5mm*3	
Spring line Israel 10A	≤24V30A ≤48V15A	0.75mm*3	
Straight line Israel 10A	≤24V50A ≤48V25A	1.5mm*3	
Spring Line Brazil 10A	≤24V30A ≤48V15A	0.75mm*3	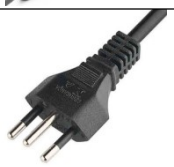
Straight Line Brazil 10A	≤24V50A ≤48V25A	1.5mm*3	
Industrial plug 16A	≤24V100A ≤48V50A	2.5mm*3	

Power cord model list 2

Model	Compatible charger	AC wire diameter	Plug photo
Spring line greater South Africa 10A	≤24V30A ≤48V15A	0.75mm*3	
Straight line greater South Africa 10A	≤24V50A ≤48V25A	1.5mm*3	
Spring Line Switzerland 10A	≤24V30A ≤48V15A	0.75mm*3	
Spring line Japanese standard 12A	≤24V50A ≤48V25A	1.5mm*3	
Straight line Japanese standard 12A	≤24V50A ≤48V25A	1.5mm*3	
Spring line American Standard 10A	≤24V30A ≤48V15A	0.75mm*3	
Straight line American Standard 10A	≤24V50A ≤48V25A	1.5mm*3	

2.11 DC Output connectors

The output of the above series charger is optional, you can choose according to the current output connector of the battery, we provide the following optional models.

Output connection table

Model	Adaptation type	Battery type	Plug photo
OT series	Built	Lead-acid/lithium-ion battery	
MD5.5-250	Built	Lead-acid/lithium-ion battery	
EVN4012	Built	Lead-acid/lithium-ion battery	
SR50A	External	Lead-acid/lithium-ion battery	
GPS75XFP	External	lithium-ion battery	

3 Safety

3.1 Safety tips for installation

3.1.1 Fire hazard

⚠DANGER

Safety warning for external chargers

- There must be no flammable materials near the charger Included shipping and packaging materials are included:
- There must be no flammable materials within 2.5 m of the charger.
- The horizontal distance between the charger and the combustible material is at least 2.5 m It is forbidden to store flammable materials (e g on shelves) above the charger or to use flammable building materials The distance from areas with a risk of fire, explosion and explosives must be at least 5 m .

⚠DANGER

Built-in charger safety warning

- The charger cannot be installed close to the controller.
- The positive pole of the charger output connection is not allowed to be directly connected to the battery.
- After the charger output is installed, a pipe sheath needs to be installed to protect it from bare metal touching the metal powder.

3.1.2 Water ingress risk

⚠DANGER

There must not be any liquid in the vicinity of the charger.

Do not place any liquid on top of the charger.

3.1.3 Stress risk

⚠DANGER

- Avoid the charger exceeding the stress level and do not place anything on top of the charger.
- Electrical installation according to uniform regulations (wire cross-sections, safety devices, ground connections)Avoid the input and output stress of the charger exceeding the range, and do not modify any parameters of the cable (including length, wire diameter, voltage carrying range, etc.) without the authorization of the manufacturer.Before electrical installation, please check the parameters on the nameplate (voltage/frequency/current, etc.) and compare them with the performance parameters of the power connector. Prevent the charger from ultra-high stress ranges (voltage, frequency, and current) by connecting the grid safety device in series.

3.1.4 Water ingress risk

⚠DANGER

- Missing or improperly designed leakage protection devices can lead to a risk of electric shock and fire.
- Missing or poorly designed residual current protection devices can cause fatal injuries by causing electric shock or fire in the event of a malfunction necessary, use Type B or B+RCD (Residual Current Device, RCD).
- In order to operate the charger, the location of use must have a grid interface The supply voltage and frequency must match the instructions on the rating plate (see the section "Identification and Labeling on the Charger") As specified, grid interfaces must be properly grounded .
- The charger must be protected from excessive contact voltages according to the regulations of the local power supply unit (EVU) .
- If the power cord of the charger is damaged, it must be replaced by the manufacturer or its customer service department or appropriate qualified personnel to avoid danger.

3.1.5 Installation environmental risks

⚠WARNING

Safety warning for external chargers

- The side distance to the next charger is at least twice the width of the charger If the spacing to the next charger cannot be respected, the chargers need to be staggered.
- Please install the charger in a vertical position, and there are no foreign objects around the fan to prevent the fan from getting foreign objects inside the charger when working Do not allow horizontal installation.
- Maintain a minimum lateral distance of 0,5 m from the next wall.
- Do not install this charger in a commercial environment.
- Fire extinguishing equipment must be prepared around the charger.
- Ensure optimal ventilation of the charger:
- When installing/installing the charger, you should pay attention to:
  - No corrosive gases, e g acid gases,
  - No conductive dust, such as soot or metal dust,
  - No excessive non-conductive dust is deposited,
  - No water should enter the inside of the charger
- Pay attention and comply with the regulations set by the battery manufacturer.
- In addition to the restrictions on the choice of installation site mentioned in this operating instruction national regulations must be observed.

⚠WARNING

Built-in charger safety warning

- Please install the charger in a vertical position, and there are no foreign objects around the fan to prevent the fan from getting foreign objects inside the charger when working Do not allow horizontal installation.
- The charger is not allowed to be installed on a liquid lead-acid battery.
- The charger is not allowed to be installed in the controller accessory, at least at a distance of more than 400mm away from the control.
- After the charger output is installed, a pipe sheath needs to be installed to protect it from bare metal touching the metal powder..
- Ensure optimal ventilation of the charger:
- When installing/installing the charger, you should pay attention to:
  - No corrosive gases, e g acid gases,
  - No conductive dust, such as soot or metal dust,
  - No excessive non-conductive dust is deposited,
  - No water should enter the inside of the charger
- Pay attention and comply with the regulations set by the battery manufacturer.
- In addition to the restrictions on the choice of installation site mentioned in this operating instruction national regulations must be observed.

3.1.6 Appearance warning

⚠WARNING

The charger has an IP 20 degree of protection against Moisture Ingress and is specially designed for indoor use This is identified by the character 5957 in accordance with IEC 60417.	
Please read the operating instructions carefully before use The work of the battery and charger should only be carried out by a professional following instructions The operating instructions must be placed in a prominent location and easily accessible.	

Avoid open flames or open ignition sources near the battery or charger,and do not smoke.	
Make sure there is adequate ventilation in the chargingarea and do not disconnect. Note:Dirty batteries or chargers require personal protective equipment (e.g., protective glasses and gloves).	
If your charger is not working poperly,you will face many dangers Such as electrical hazards due to mains currents or hazards due to Other causes should be repaired immediately by an authorized Professional. note: high-performance lithium-ion batteries generate extremely high short-circuit currents The metal part is always live, so do not place foreign objects or tools on the battery Take care to comply with accident prevention regulations such as DIN EN 62485-3.	
Pay attention to the correct use of the charger as prescribed Otherwise it may lead to greater danger Unprofessiona l or incorrect use will invalidate the product Do not cover the charger in any form during charging In addition, it is necessary to pay attention to the installation instructions	
Used chargers are hazardous waste and require special disposal Do not dispose of this product in household waste In accordance with the European WEEE Directive 2012/19/EU on waste electrical and electronic equipment (which has been transposed into national law) used power tools must be collected separately and recycled in an environmentally friendly manner Be sure to return your used charger to the dealer or get information about your local authorized collection and disposal system	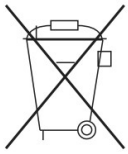

3.2 Use safety reminders

3.2.1 Pre-use safety reminders

⚠DANGER

Safety warning for external chargers

- Check before each use of the charger.
- The space for forklift charging should be kept fully ventilated.
- There is no clogging of the fan and no foreign objects around None of the vents were blocked Within a radius of at least 2,5 m around the forklift that needs to be charged, flammable materials and work equipment that could generate sparks must not be placed.
- There are no flammable, explosive, or combustible materials, chemicals, flammable vapors, and other dangerous items in the vicinity of the charger.
- Ensure that the available space around the battery charger is sufficient to provide adequate ventilation and easy access to the cable socket .
- Make sure the charger is not in the environment where any liquid gets in, and do not pour liquid into the charging case or place it on top of the charger.

- Confirm that nothing has been placed on the output cable and input power cord or place it where you can step on it.
- Confirm that there are no defects, cracks, worn, or exposed copper wires inside the output plug and cable, and that the charging output plug is clean and dry, and that there are no dirt, iron filings and other foreign objects inside, and that the cable is not entangled with any items, and that there are no knots.
- Make sure the input and output cables are not scattered and tangled, people may get entangled or trip over the scattered and surrounded cables.
- Confirm that the input plug and wire are free of defects, cracks, wear, or exposed copper wires inside the cable, and that the charging input plug is clean and dry, and that the metal contacts are free of dirt, iron filings and other foreign objects, and that the metal contacts are in a shiny state.
- Whether the enclosure is intact or not .

⚠DANGER

Built-in charger safety warning

- Check before each use of the charger.
- The space for forklift charging should be kept fully ventilated.
- Ensure that the available space around the battery charger is sufficient to provide adequate ventilation and easy access to the cable socket .
- Make sure the charger is not in the environment where any liquid gets in, and do not pour liquid into the charging case or place it on top of the charger.
- Confirm that nothing has been placed on the output cable and input power cord or place it where you can step on it.
- Confirm that there are no defects, cracks, worn, or exposed copper wires inside the output plug and cable, and that the charging output plug is clean and dry, and that there are no dirt, iron filings and other foreign objects inside, and that the cable is not entangled with any items, and that there are no knots.
- Make sure the input and output cables are not scattered and tangled, people may get entangled or trip over the scattered and surrounded cables.
- Confirm that the input plug and wire are free of defects, cracks, wear, or exposed copper wires inside the cable, and that the charging input plug is clean and dry, and that the metal contacts are free or dirt, iron filings and other foreign objects, and that the metal contacts are in a shiny state.

3.2.2 Run and operate safety reminders

⚠DANGER

Safety warning for external chargers

- Before connecting the output, make sure that there is no fault information on the charger display Interface.
- Do not connect batteries that cannot be charged.
- Do not connect any commercial batteries.
- Before connecting the battery, make sure that the charger is compatible with the battery of that model.
- It is forbidden to smoke or use an open flame around the battery.
- Make sure that liquid does not flow into the inside of the charger.
- Before connecting the battery, it is essential to check and follow the instructions on the rating. voltage of the allowable battery voltage (see the "Identification and Labeling on the Charger" section) Place the battery in front of or next to the charger so that the battery plug is within the operating distance of the charger's charging cable (standard 2,5 m).
- The relevant safety regulations of the manufacturer of the battery and the charging station must be strictly followed.
- The charger input and output cables can only be connected or unplugged when the charger and forklift are turned off.
- If the charging process is interrupted by unplugging it, there is a risk of personal injury The resulting

spark can ignite the charging gas formed during charging, which can cause a fire or explosion.

- For chargers whose charging procedures can be changed subsequently, the operator is obliged to record the applicable battery type on the housing.
- If it is determined that there are safety-related changes, damage, or other defects in the charger or in performance, the charger must not be used until repairs have been carried out in accordance with the regulations.
- If you find any damage, you can immediately feedback with the EP.
- Mark the damaged charger and deactivate it.
- The charger should only be reused after the fault has been identified and troubleshooting.
- Do not unplug the charger input power plug while the charger is working.
- Do not unplug the charger output while the charger is working.
- Do not directly touch the surface of the charger when the charger is working to avoid high temperature burns.

⚠DANGER

Built-in charger safety warning

- It is forbidden to smoke or use an open flame around the battery.
- Make sure that liquid does not flow into the inside of the charger.
- The relevant safety regulations of the manufacturer of the battery and the charging station must be strictly followed.
- If you find any damage, you can immediately feedback with the EP.
- Mark the damaged charger and deactivate it.
- The charger should only be reused after the fault has been identified and troubleshooting.
- Do not unplug the charger input power plug while the charger is working.
- Do not unplug the charger output while the charger is working.
- Do not directly touch the surface of the charger when the charger is working to avoid high temperature burns.

3.2.3 Safety reminder after use

⚠CAUTION

- Prerequisite.
- The charger is fully charged or standby.
- The charger is paused.
- Procedure.
- Turn off the charger air switch.
- Disconnect the charger input.
- Disconnect the charger output.
- When the charging process is over, roll up the charging cable or place it on the cable holder, and when placing the cable, make sure it doesn't get tangled or trip over people.

3.3 Service Safety Reminder

⚠DANGER

Dangerous voltage warning.

- Chargers are electrical devices in which voltage and current can endanger personal safety.
- The charger should only be operated by a trained and authorized professional.
- Before intervening in the charger or working on the charger, the power supply should be disconnected,and, if necessary, the battery should be disconnected.
- The inside of the charger can only be opened and repaired by obtaining EP authorized service The charger must be separated from the power supply and battery before maintenance or repair work begins.
- After 5 minutes of separation from the grid and the battery, the charger's housing can be opened from which the installed capacitors can be unloaded.
- No alterations, modifications and additions to the charger that affect safety are allowed without the

manufacturer's permission! This also applies to the installation and setting of safety devices• Special care should be taken not to narrow the spacing and air gaps.

• The spare parts used must meet the technical requirements specified by the manufacturer This is always ensured by the use of original spare part.

3.4 Maintenance safety tips

⚠DANGER

Dangerous voltage warning.

• Chargers are electrical devices in which voltage and current can endanger personal safet The charger should only be operated by a trained and authorized professional.

⚠CAUTION

The wear and tear of the required maintenance parts is highly dependent on the actual operation and conditions of use of the charger. The following must be checked monthly.

• Whether the signal pin inside the output plug-in is firmly linked.

• Clean the dust of the filter screen at the air inlet of the fan, and replace it immediately if it is damaged.

• Use a dry rag to remove any foreign matter from the inside of the plug-in and the signal pin.

• Whether the grid interface is intact.

• Whether the enclosure is intact.

• Whether the insulation of the grid interface cable is intact.

• Whether all bolted joints are fixed or not.

⚠WARNING

• The following safety tests must be performed every 6 months or after the replacement of repair part. Ground resistance test.

• Insulation resistance test.

• Hipot test.

• Leakage current test.

• Output surge.

• Voltage dip test.

• Leakage protection.

• Protection against electric shock.

4 operation

4.1 Installation

4.1.1 Disassemble the box

⚠WARNING

Wear protective gloves when using any tools.

Use a tool to disassemble the box and Remove the charger from the box.	
Schematic diagram of the charger	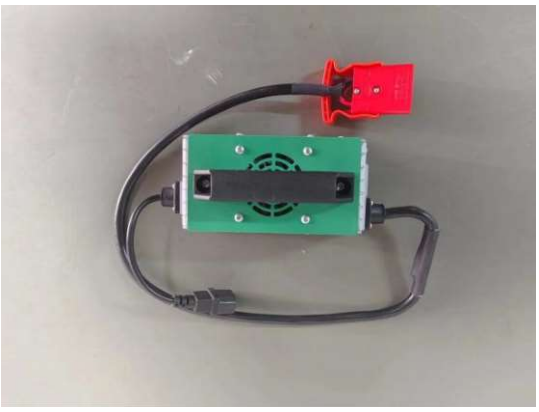

4.1.2 Grid safety devices

⚠DANGER

- The following work should only be performed by trained and authorized professionals.
- Do not install the device with electricity.

⚠DANGER

- Missing or improperly designed leakage protection devices can lead to a risk of electric shock and fire.
- Missing or poorly designed residual current protection devices can cause fatal injuries by causing.
- Electric shock or fire in the event of a malfunction.
- necessary, use Type B or B+RCD (Residual Current Device, RCD).
- In order to operate the charger, the location of use must have a grid interface The supply voltage and frequency must match the instructions on the rating plate (see the section "Identification and Labeling on the Charger") As specified, grid interfaces must be properly grounded.

- The charger must be protected from excessive contact voltages according to the regulations of the local power supply unit (EVU).
- If the power cord of the charger is damaged, it must be replaced by the manufacturer or its Customer.
- service department or appropriate qualified personnel to avoid danger.
- Do not install the device with electricity.

Refer to the following table for the safety device of the series power grid

Current rating	Grid safety devices	remark
> 23 to 32 A	35 A gL	A gL fuse can be used Or use a circuit autoprotector with K performance

The output current rate of the charger is detailed on the rating plate

charger		Fuse data[A]
Output current [A]		At an output voltage of 48V
from	reach	/
0	50	50A

charger		Fuse data[A]
Output current [A]		At an output voltage of 80V
from	reach	/
0	25	25A
25	35	35A

4.1.3 Install the charger

⚠DANGER

Safety warning for external chargers

- There must be no flammable materials near the charger Included shipping and packaging materials are included:
- There must be no flammable materials within 2.5 m of the charger.
- The horizontal distance between the charger and the combustible material is at least 2.5 m It is forbidden to store flammable materials (e g on shelves) above the charger or to use flammable building materials The distance from areas with a risk of fire, explosion and explosives must be at least 5 m .

⚠DANGER

Built-in charger safety warning

- The charger cannot be installed close to the controller.
- The positive pole of the charger output connection is not allowed to be directly connected to the battery.
- After the charger output is installed, a pipe sheath needs to be installed to protect it from bare metal touching the metal powder.

⚠DANGER

There must not be any liquid in the vicinity of the charger.

Do not place any liquid on top of the charger.

⚠DANGER

- Avoid the charger exceeding the stress level and do not place anything on top of the charger.
- Electrical installation according to uniform regulations (wire cross-sections, safety devices, ground

connections)Avoid the input and output stress of the charger exceeding the range, and do not modify any parameters of the cable (including length, wire diameter, voltage carrying range, etc.) without the authorization of the manufacturer.Before electrical installation, please check the parameters on the nameplate (voltage/frequency/current, etc.) and compare them with the performance parameters of the power connector. Prevent the charger from ultra-high stress ranges (voltage, frequency, and current) by connecting the grid safety device in series.

⚠DANGER

- Missing or improperly designed leakage protection devices can lead to a risk of electric shock and fire.
- Missing or poorly designed residual current protection devices can cause fatal injuries by causing electric shock or fire in the event of a malfunction necessary, use Type B or B+RCD (Residual Current Device, RCD).
- In order to operate the charger, the location of use must have a grid interface The supply voltage and frequency must match the instructions on the rating plate (see the section "Identification and Labeling on the Charger") As specified, grid interfaces must be properly grounded .
- The charger must be protected from excessive contact voltages according to the regulations of the local power supply unit (EVU) .
- If the power cord of the charger is damaged, it must be replaced by the manufacturer or its customer service department or appropriate qualified personnel to avoid danger.

⚠WARNING

Safety warning for external chargers

- The side distance to the next charger is at least twice the width of the charger If the spacing to the next charger cannot be respected, the chargers need to be staggered.
- Please install the charger in a vertical position, and there are no foreign objects around the fan to prevent the fan from getting foreign objects inside the charger when working Do not allow horizontal installation.
- Maintain a minimum lateral distance of 0,5 m from the next wall.
- Do not install this charger in a commercial environment.
- Fire extinguishing equipment must be prepared around the charger.
- Ensure optimal ventilation of the charger:
- When installing/installing the charger, you should pay attention to:
  - No corrosive gases, e g acid gases,
  - No conductive dust, such as soot or metal dust,
  - No excessive non-conductive dust is deposited,
  - No water should enter the inside of the charger
- Pay attention and comply with the regulations set by the battery manufacturer.
- In addition to the restrictions on the choice of installation site mentioned in this operating instruction national regulations must be observed.

⚠WARNING

Built-in charger safety warning

- Please install the charger in a vertical position, and there are no foreign objects around the fan to prevent the fan from getting foreign objects inside the charger when working Do not allow horizontal installation.
- The charger is not allowed to be installed on a liquid lead-acid battery.
- The charger is not allowed to be installed in the controller accessory, at least at a distance of more than 400mm away from the control.
- After the charger output is installed, a pipe sheath needs to be installed to protect it from bare metal touching the metal powder..
- Ensure optimal ventilation of the charger:
- When installing/installing the charger, you should pay attention to:
  - No corrosive gases, e g acid gases,

– No conductive dust, such as soot or metal dust,
– No excessive non-conductive dust is deposited,
– No water should enter the inside of the charger

- Pay attention and comply with the regulations set by the battery manufacturer.
- In addition to the restrictions on the choice of installation site mentioned in this operating instruction national regulations must be observed.

⚠WARNING

- This series of chargers is suitable for charging industrial lithium batteries Any other use of the equipment is non-compliant and may result in injury, damage to the equipment, or other property Damage.
- The rated operating input voltage range, frequency range, maximum input current, and input power are all specified in detail on the nameplate.
- The rated working output voltage range, current range, and constant power are all specified in detail on the nameplate.
- Used in industrial environments.
- The permissible temperature range is between -10°C and 45°C .
- Relative humidity is 5%~95%.
- The altitude should not exceed 2000 m .
- Input voltage fluctuation range of ±15%.
- Storage temperature: -20 °C~75 °C.
- Storage humidity 5%~95%.

Check whether the charger is internal or external, and select the following installation method according to the charger adaptation type.
1: Built-in charger mode: connect the positive and negative poles of the output and the grounding wire. Connect the input AC power cable.
2: External charger mode: Externally connect the AC power cable, and the charger needs to be placed at a height of 500mm above the ground.

Note: If you want to replace the cable, please refer to Section 2.6 for the relevant technical parameters.
Note: Charger adaptation AC power cords vary by model, see Section 2.6.
Note: If the environmental conditions exceed the above range, you should contact us in advance to negotiate and solve.

4.2 Operators Daily Checklist

⚠DANGER

Safety warning for external chargers

- The space for forklift charging should be kept fully ventilated.
- There is no clogging of the fan and no foreign objects around None of the vents were blocked Within a radius of at least 2,5 m around the forklift that needs to be charged, flammable materials and work equipment that could generate sparks must not be placed.
- There are no flammable, explosive, or combustible materials, chemicals, flammable vapors, and other

dangerous items in the vicinity of the charger.

- Ensure that the available space around the battery charger is sufficient to provide adequate ventilation and easy access to the cable socket .
- Make sure the charger is not in the environment where any liquid gets in, and do not pour liquid into the charging case or place it on top of the charger.
- Confirm that nothing has been placed on the output cable and input power cord or place it where you can step on it.
- Confirm that there are no defects, cracks, worn, or exposed copper wires inside the output plug and cable, and that the charging output plug is clean and dry, and that there are no dirt, iron filings and other foreign objects inside, and that the cable is not entangled with any items, and that there are no knots.
- Make sure the input and output cables are not scattered and tangled, people may get entangled or trip over the scattered and surrounded cables.
- Confirm that the input plug and wire are free of defects, cracks, wear, or exposed copper wires inside the cable, and that the charging input plug is clean and dry, and that the metal contacts are free of dirt, iron filings and other foreign objects, and that the metal contacts are in a shiny state.
- Whether the enclosure is intact or not .

⚠DANGER

Built-in charger safety warning

- Check before each use of the charger.
- The space for forklift charging should be kept fully ventilated.
- Ensure that the available space around the battery charger is sufficient to provide adequate ventilation and easy access to the cable socket .
- Make sure the charger is not in the environment where any liquid gets in, and do not pour liquid into the charging case or place it on top of the charger.
- Confirm that nothing has been placed on the output cable and input power cord or place it where you can step on it.
- Confirm that there are no defects, cracks, worn, or exposed copper wires inside the output plug and cable, and that the charging output plug is clean and dry, and that there are no dirt, iron filings and other foreign objects inside, and that the cable is not entangled with any items, and that there are no knots.
- Make sure the input and output cables are not scattered and tangled, people may get entangled or trip over the scattered and surrounded cables.
- Confirm that the input plug and wire are free of defects, cracks, wear, or exposed copper wires inside the cable, and that the charging input plug is clean and dry, and that the metal contacts are free or dirt, iron filings and other foreign objects, and that the metal contacts are in a shiny state.

⚠WARNING

Never start the charger until any damage or malfunction of the charger has been resolved.

4.3 Run the charger

⚠DANGER

Safety warning for external chargers

- Do not connect batteries that cannot be charged.
- Do not connect any commercial batteries.
- Before connecting the battery, make sure that the charger is compatible with the battery of that model.
- It is forbidden to smoke or use an open flame around the battery.
- Make sure that liquid does not flow into the inside of the charger.
- Before connecting the battery, it is essential to check and follow the instructions on the rating. voltage of the allowable battery voltage (see the "Identification and Labeling on the Charger" section) Place the battery in front of or next to the charger so that the battery plug is within the

operating distance of the charger's charging cable (standard 2,5 m).

- The relevant safety regulations of the manufacturer of the battery and the charging station must be strictly followed.
- The charger input and output cables can only be connected or unplugged when the charger and forklift are turned off.
- If the charging process is interrupted by unplugging it, there is a risk of personal injury The resulting spark can ignite the charging gas formed during charging, which can cause a fire or explosion.
- For chargers whose charging procedures can be changed subsequently, the operator is obliged to record the applicable battery type on the housing.
- If it is determined that there are safety-related changes, damage, or other defects in the charger or in performance, the charger must not be used until repairs have been carried out in accordance with the regulations.
- If you find any damage, you can immediately feedback with the EP.
- Mark the damaged charger and deactivate it.
- The charger should only be reused after the fault has been identified and troubleshooting.
- Do not unplug the charger input power plug while the charger is working.
- Do not unplug the charger output while the charger is working.
- Do not directly touch the surface of the charger when the charger is working to avoid high temperature burns.

⚠ DANGER

Built-in charger safety warning

- It is forbidden to smoke or use an open flame around the battery.
- Make sure that liquid does not flow into the inside of the charger.
- The relevant safety regulations of the manufacturer of the battery and the charging station must be strictly followed.
- If you find any damage, you can immediately feedback with the EP.
- Mark the damaged charger and deactivate it.
- The charger should only be reused after the fault has been identified and troubleshooting.
- Do not unplug the charger input power plug while the charger is working.
- Do not unplug the charger output while the charger is working.
- Do not directly touch the surface of the charger when the charger is working to avoid high temperature burns.

⚠ WARNING

Wipe off any water stains on your hands to avoid electric shock

Connect the charger AC input to the power grid.

Using the charger output connector, connect the battery.	
Schematic diagram of the completion of the connection	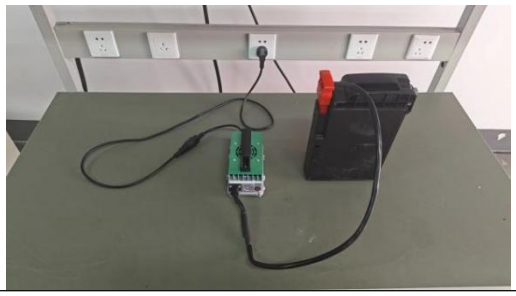

Note: The plug needs to be securely connected at a height of 1 meter from the ground.

4.4 Working status

⚠ WARNING

- Do not unplug the charger input power plug while the charger is working.
- Do not unplug the charger output while the charger is working.
- Do not directly touch the surface of the charger when the charger is working to avoid high temperature burns.

Light Strip Color	Charger State	Photo
RED LIGHTING ON	Charging	
GREEN LIGHTING ON	Fully Charged	
YELLOW FLASHING	Charger Fault	
YELLOW LIGHTING ON	Bettery Fault	

4.5 Running curves

The charger will output the corresponding voltage and current according to the lithium battery CAN message, the above curve is only test data, it does not mean that the charger will be charged according to this curve.	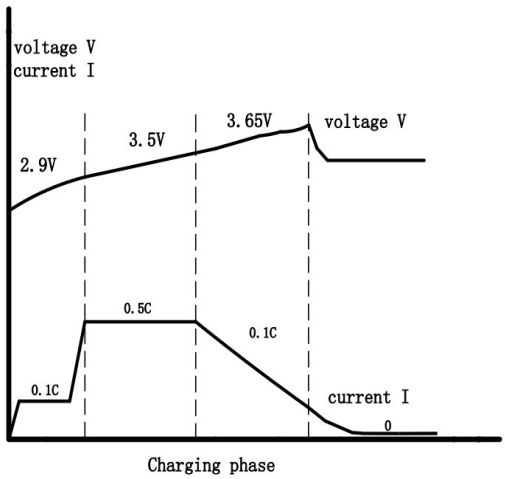

Note: In the curve, V represents the voltage of the monomer, 24V monomer = 8 strings, 48Vmonomer =15 strings, 80V monomer = 24 strings. The calculated curve voltage should = number of cells * cell Voltage.

Note: In the curve, C is equal to the actual capacity of the battery. In the calculation, the current Operating current should = the actual capacity of the battery * the current execution multiple, For example, the 80V400AH battery needs to be charged, according to the above graph, the working logic of the charger should be that when the voltage is lower than 69.6V, the charger will output 40Acurrent. When the battery voltage is greater than 69.6V and lower than 84V, the charger will output 200A current. When the battery voltage is greater than 84V and lower than 87.6V, the charger will output 40A current and maintain it until the battery is fully charged.

Note: The charger does not provide lead-acid battery curve query, please refer to the lead-acid battery manual.

4.6 Once the operation is complete

Disconnect the charger input.

Disconnect the charger output.

When the charging process is over, roll up the charging cable or place it on the cable holder, and when placing the cable, make sure it doesn't get tangled or trip over people.

Use the charger that was placed after completion	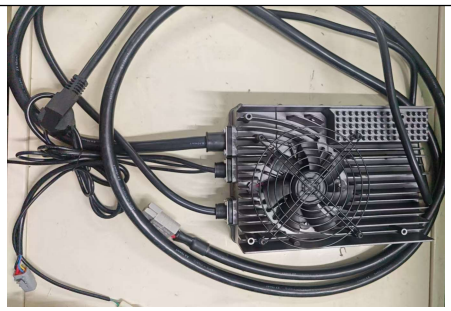

5 Description of the fault

5.1 Lead battery fault table

Fault Code	Item	Description
1	Abnormal charging machine	Input AC power failure, internal temperature failure, and issues with one end of the charger causing charging to not continue
2	Battery abnormality	Charging failure caused by improper battery connection

Lithium battery fault table

Fault Code	Item	Description
1	Abnormal charging machine	Input AC power failure, internal temperature failure, communication failure, and issues with one end of the charger causing charging to not continue
2	Battery abnormality	Charging failure caused by improper battery connection
3	Non-load	The charger failed to detect the battery, CAN communication anomaly, The charger is on standby.

5.2 Simple breakdown repairs

5.2.1 Fault 1: Abnormal charging machine

BMS (Battery Management System) faults , please refer to the battery manual

⚠DANGER

- The following faults need to be carried out by a professional electrician.
- Before intervening with the charger, disconnect the charger input and output.
- Do not touch the metal surface on the outside of the charger to avoid high temperature burns.

AC Input Overvoltage/Undervoltage:
yellow led flashing
Solution:When the input voltage exceeds the set value of the charger, the charger will automatically enter a protective state and stop running. After eliminating the abnormal AC power, the charger will automatically restart
Check if the input voltage is less than the working voltage of the charger. If it is less than this value, eliminate the AC fault and recharge the charger

Output Overvoltage/Undervoltage:
yellow led flashing
Solution:When the battery voltage is greater than the maximum value detected internally by the charger or less than the minimum value detected internally, the charger cannot charge the battery normally. At this time, stop charging the battery with too high an overvoltage. For the battery with too low a voltage, replenish it to the normal voltage and then charge it with the charger.

Over temperature protection:
yellow led flashing
Solution:
The internal temperature of the charger is too high due to excessive external temperature, damaged charger fan, or the charger is in a closed and confined space. Place the charging area in a ventilated environment, and the charger will take care of the skin after the internal temperature drops. If the fan of the charger fails, it is recommended to return to the factory for repair.

Internal fault of charger:
yellow led flashing
Solution:
After troubleshooting input, output, temperature and other faults, the charger does not start normally, and the charger will stand for 2 hours. Re-connect to the AC power, but the charger still does not start. It is recommended to return to the factory for maintenance.

5.2.2 Fault 2:Battery abnormality

⚠DANGER

- The following faults need to be carried out by a professional electrician
- Before intervening with the charger, disconnect the charger input and output
- Do not touch the metal surface on the outside of the charger to avoid high temperature burns

Battery abnormality:
yellow lighting on
Solution:
please refer to the battery manual

5.2.3 Fault 3: Non-load

⚠DANGER

- Before intervening with the charger, disconnect the charger input and output.
- Do not touch the metal surface on the outside of the charger to avoid high temperature burns.
- When detecting the output voltage, voltage, and current, do not touch any of the metal contacts of the connector with your hands.

Communication failure:
yellow led flashing
Solution:
Check whether the CAN-H and CAN-L have faults such as reverse connection and poor contact. After the inspection, they still cannot be charged normally. Check whether the charging protocol matches and whether the baud rate matches.

5.3 Service support

Most of the above situations can be resolved with simple troubleshooting. If it is determined that the issue does not fall into the above category, it may indicate that the charger's hardware is damaged. Customers who meet the after-sales service conditions are kindly requested to contact EP in time for hardware replacement.

If you are unable to identify the problem, need to replace the hardware, or need to change the software, please contact your local distributor. In this case, remote video communication may be required.

When contacting the EP, please provide a detailed description of the problem. For charger fault repairs, please provide charger nameplate information, battery information, and capture CAN communication information during charging if necessary to identify specific problem

6 Waste disposal

NOTE

Chargers should be collected separately from household or commercial waste and properly recycled or disposed of Take the old charger (if any) in-house for disposal and hand it over to a professional company (professional waste disposal company) In principle, it is also possible to return the old charger to the manufacturer. To do so, please contact the manufacturer's customer service department. Specific protocols must be adhered to.

According to the European WEEE Directive (2012/19/EU), electrical and electronic equipment must be collected, recycled or professionally disposed of separately from unsorted municipal waste, where pollutants resulting from improper disposal can cause lasting damage to health and the environment.

Detailed information can be obtained at the Waste Disposal Specialist Plant or the relevant authority The packaging of the charger should be disposed of separately. Paper, cardboard and plastic are recycled.

PH series

Battery charger from WEIHAI TL POWER CO., LTD.

Operation Manual

V1-07.24
(en-GB)

Foreword

By carefully reading the operating instructions, the user can acquire the necessary technical knowledge to safely operate the charger. The operating instructions contain concise and well organized information sections are arranged alphabetically, and page numbers are numbered.

The company will continue to develop chargers therefore, Manufacturing company must reserve the right to modify the appearance, equipment, and technology. For these reasons, no claims for any device-specific performance may be derived from the contents of these operating instructions.

Safety notices and text mark-ups

Safety instructions and important explanations are indicated by the following graphics:

⚠DANGER

Means that failure to comply can cause risk to life and/or major damage to property.

⚠WARNING

Please strictly adhere to these safety instructions to avoid personal injury or major damage to equipment.

⚠CAUTION

Please pay attention to the important safety instructions.

NOTE

Pay attention to Instruction.

ALL RIGHTS RESERVED

2024.07 01st EDITION

Content

1 General 2
1.1 Introduction 2
1.2 Important safety tips 3
1.3 Permissable operating conditions 4
1.4 Intended use 4
1.5 Impermissible use 4
2 Charger description 6
2.1 Charger appearance 6
2.2 Feature description 6
2.3 Description of how it works 6
2.4 Charger parts information 8
2.5 Outline drawings 10
2.6 Technical data sheets of 300A series chargers 11
2.7 Model description 12
2.8 Nameplates and logotype 12
2.9 Enforce the standard 13
2.11 DC Output connectors 15
3 Safety 15
3.1 Safety tips for installation 15
3.2 Use safety reminders 18
3.2.1 Pre-use safety reminders 18
3.2.2 Run and operate safety reminders 19
3.3 Service Safety Reminder 20
3.4 Maintenance safety tips 20
4 operation 21
4.1 Installation 21
4.1.1 Disassemble the box 21
4.1.2 Grid safety devices 22
4.1.3 Install the charger 23
4.2 Operators Daily Checklist 25
4.3 Run the charger 26
4.4 Working status 28
4.5 Running curves 29
4.6 Once the operation is complete 29
5 Description of the fault 30
5.1 Lead battery fault table 30
5.2 Simple breakdown repairs 30
5.2.1 Fault 1: Abnormal charging machine 30
5.2.2 Fault 2:Battery abnormality 31
5.3 Service support 32
6 Waste disposal 32

1 General

1.1 Introduction

This operation guide helps the model to use PH models of 80V60A charger as a reference object to achieve safe operation of the charger specifications.

This manual must be readily available and kept in a prepared place This manual is intended for use by all persons who have access to the operating process of the charger, including transportation, installation and installation, operation, maintenance, and disassembly.

In commercial use, in addition to the operating instructions, the relevant guidelines, regulations, and laws in force in the place of use or the country of use should be followed to ensure safe and standardized operations.
Information other than this operating manual is provided by a professional on the part of the manufacturer or supplier.

All materials are protected by copyright Without express authorization, it is forbidden to retransmit and reproduce the material and its excerpts, to quote and disseminate its contents.

Obligations and Responsibilities of the User of the Equipment: In this Manual, the term "User" refers to any natural or legal person who directly uses or appoints another person to use the Equipment In special cases such as rental, sale or rental, "Equipment User" represents a party that has specific operational obligations under the terms of the contract concluded between the Owner of the Equipment and the User.

In addition, the user of the equipment must strictly comply with the provisions for the prevention of accidents, other safety technical regulations, and guidelines for the use, maintenance and repair of the equipment The user must ensure that all operators carefully read and fully understand the contents of this manual.

The Company shall not be liable for any damages arising from the improper operation of the equipment by the customer or the user of the equipment or a third party without the permission of the Company's customer service department.

If additional equipment needs to be installed or added, and if it affects or complements the functionality of the equipment, prior written consent must be obtained from the manufacturer and, depending on the actual situation, approval from the relevant certification body may also be required.

1.2 Important safety tips

The charger is produced in accordance with EU directives and state-of-the-art technology and provides additional safety tips to ensure the absolute safety of personnel.

⚠DANGER

• The following conditions can result in serious personal and property damage:
• Improper use or incorrect operation.
• Turn on the charger without permission.
• Installation errors or improper maintenance and repairs .
• Replace the input and output wires without permission.
• Charge the damaged battery.

⚠DANGER

Attention must be paid to and all instructions contained in this operating instruction regarding proper use, residual risks, installation, operation, and maintenance.

⚠DANGER

Charging a battery that is not suitable for this charger will cause damage to the charger and battery The battery will swell or burst:
• It can only charge EP brand electric industrial forklift batteries.
• Please determine the battery type that the charger is compatible with before use.
• Do not cross-use or change the charger adaptation type.

⚠WARNING

Dangerous voltage warning
Chargers are electrical devices in which voltage and current can endanger personal safety:
• The charger should only be operated by a trained and authorized professional.
• Before intervening in the charger or working on the charger, the power supply should be disconnected and if necessary, the battery should be disconnected.
• The charger can only be opened and repaired by EP Customer Service.

⚠WARNING

Damage or other defects in the charger can lead to accidents
If it is determined that there are safety-related changes, damage, or other defects in the charger or in performance, the charger must not be used until repairs have been carried out in accordance with the Regulations:
• Identified deficiencies must be reported to the EP immediately.
• Mark the damaged charger and deactivate it.
• The charger should only be reused after the fault has been identified and troubleshooting.

⚠CAUTION

This charger is not suitable for use by:Persons (including children) with impairments in physical, sensory, or mental abilities, or lack of electrical experience and knowledge system and battery charging unless someone supervises or instructs them in using the charger Be responsible for their safety Children should be supervised to ensure they are not playing with the charger.

1.3 Permissable operating conditions

This series of chargers is suitable for charging industrial lithium batteries Any other use of the equipment is non-compliant and may result in injury, damage to the equipment, or other property damage:

- The rated operating input voltage range, frequency range, maximum input current, and input power are all specified in detail on the nameplate .
- The rated working output voltage range, current range, and constant power are all specified in detail on the nameplate.
- Used in industrial environments .
- The permissible temperature range is between -10°C and 45°C .
- Relative humidity is 5%~95%.
- The altitude should not exceed 2000 m .
- Input voltage fluctuation range of ±15% .
- Storage temperature: -20 °C~75 °C.
- Storage humidity 5%~95%.

Note: When the environmental conditions exceed the above range, you should contact us in advance to negotiate and solve.

1.4 Intended use

- Damage and other defects to the charger or accessories must be reported to the supervisor immediately. Chargers and accessories that are not safe to operate should not be used until they have been properly serviced.
- Safety installations and switches may not be removed or rendered unusable. Specified settings may only be changed with the approval of the manufacturer.
- The charger must not use more than the limit set by the manufacturer, and the fluctuation range must not exceed ±15%.
- Warning signs need to be added to the charger working area.
- In order to maintain LVD compliance with EMC, any replacement of exterior parts requires prior contact with the manufacturer.
- When using the utility grid, the regulations must be followed, as well as country-specific restrictions for winter.

1.5 Impermissible use

- If the charger is used in a way that is not permitted, the user, not the manufacturer, is responsible. The following list is for informational purposes only and is not intended to be exhaustive:
- Charge commercial batteries.
- Charge non-EP brand batteries.
- Modify or destroy safety devices.
- Modification or replacement of unauthorized parts.
- Extend or shorten the AC/DC end cable.
- The usage environment is beyond the scope of Section 1.3.
- Personnel have not undergone safety training or have not consulted the instructions for operation.

1.6 Definition of the person who is used

1.6.1 Operator

The charger should only be operated by a person who is at least 18 years of age, has been trained in electrical safety and operational safety, and who demonstrates their basic electrical skills to the user or an authorized representative. It is also necessary to have a specific understanding of the working logic of the charger to be used.

1.6.2 Users

The user is the natural person or legal entity responsible for pumping the charger. Users can operate the charger themselves or delegate the task of operating the charger to someone else, such as an operator. In the case of specific cases such as rentals, the liability is borne by the user in accordance with a valid contract between the owner of the car and the operator of the charger.

1.6.2 Specialist

A qualified person is defined as a service engineer or a person who meets the following requirements:

- Full professional qualifications that demonstrate their expertise. The certificate should include a professional qualification or similar document.
- Professional experience shows that the qualified person has gained hands-on experience with the charger during their career During this time, the person has become familiar with the various symptoms that need to be examined, such as based on the results of hazard assessments or routine inspections.
- Recent professional involvement in the field of relevant charger testing or R&D and appropriate further qualification is essential. Qualified personnel must have experience in conducting relevant tests or conducting similar tests.
- In addition, the person must be aware of the latest technological developments and the risks being assessed for the charger to be made.

1.6.3 User right,duties and rules of behaviour

Everyone operating the charger has read and understood this manual and has been approved with the relevant charger operator training. Operate the charger in a safe manner so as not to endanger the life and health of the operator and/or others. Follow all warnings and instructions in this manual This manual is available for use by the operator.

1.6.4 Operator Rights, Duties and Code of Conduct

For the purposes of these operating instructions, the operating company is defined as any natural or legal person who uses the charger on its own or on its behalf. In exceptional cases (e.g. lease or rental). The operating company is considered to be a person who performs specific operational duties under an existing contractual agreement between the charger owner and the operator.

The operating company must ensure that the charger is used only for its intended purpose and to prevent danger to the health and safety of the operator and third parties. In addition, accident prevention regulations, safety regulations, and operation, maintenance, and repair guidelines must be complied with. The operating company must ensure that all operators have read and understood these operating instruction

2 Charger description

2.1 Charger appearance

2.2 Feature description

The fixed OBC charger is characterized by small size, high conversion efficiency, and a higher level of IP protection, which makes it suitable for a wider range of environments, and it also has power-off compensation and fault indicators to make the charging status clear at a glance. The charger adopts forced air cooling cooling, and has the functions of input over-voltage, under-voltage protection, output over-voltage, under-voltage, over-current, output short circuit, fan fault protection and so on.

2.3 Description of how it works

2.3.1 Design Principles

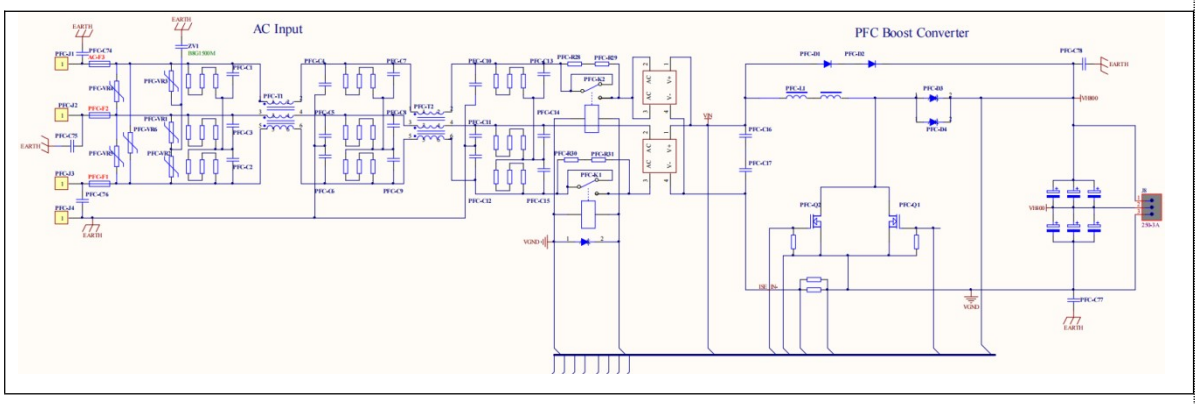

2.3.2 How it works

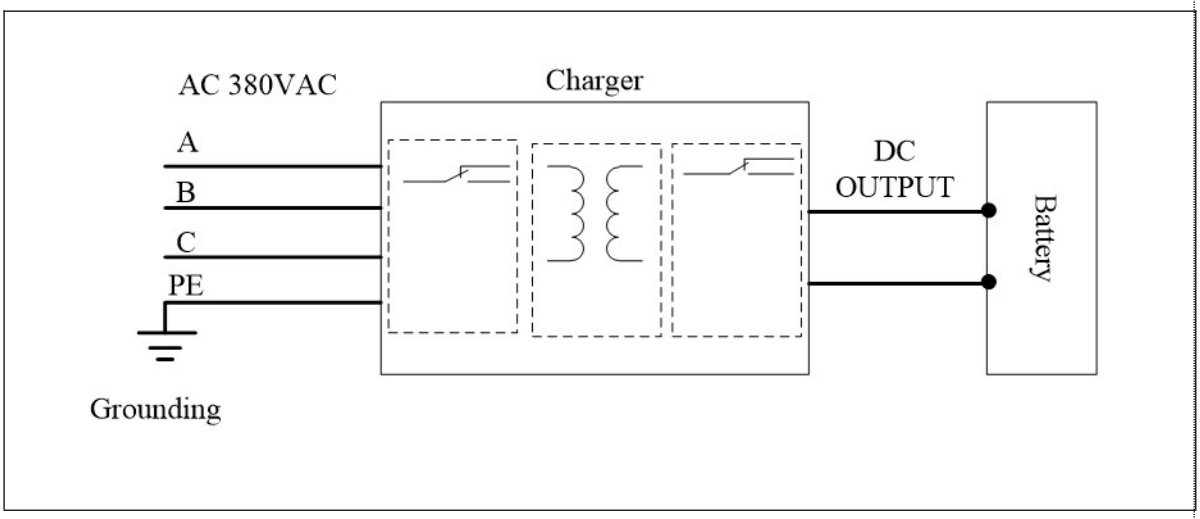

The implementation principle of the high-frequency PFC (Power Factor Correction) module charger generally follows these steps:

Input current rectification: Firstly, the AC input power is rectified into a DC power source.
High-frequency conversion: The DC power source is converted into a high-frequency AC power source, typically achieved through high-frequency switching power supplies using devices such as MOSFETs.
PFC control: The PFC controller monitors the input current and voltage and controls the high-frequency switch to minimize the phase difference between the input current and voltage, thereby maximizing the power factor.

DC-DC conversion: The power source, after power factor correction, enters a DC-DC converter to convert the high-frequency AC power into the desired DC voltage. This typically involves an inductor, a capacitor, a switching element (such as a MOSFET), and control circuitry.

Control and protection: The charger also includes control and protection circuits to ensure that the output voltage and current are within safe ranges and to monitor various conditions during the charging process, such as overvoltage, overcurrent, overtemperature, etc., and take appropriate measures to protect the charger and battery.

Note: The above instructions apply to all chargers under the PH models Technical parameters.

2.4 Charger parts information

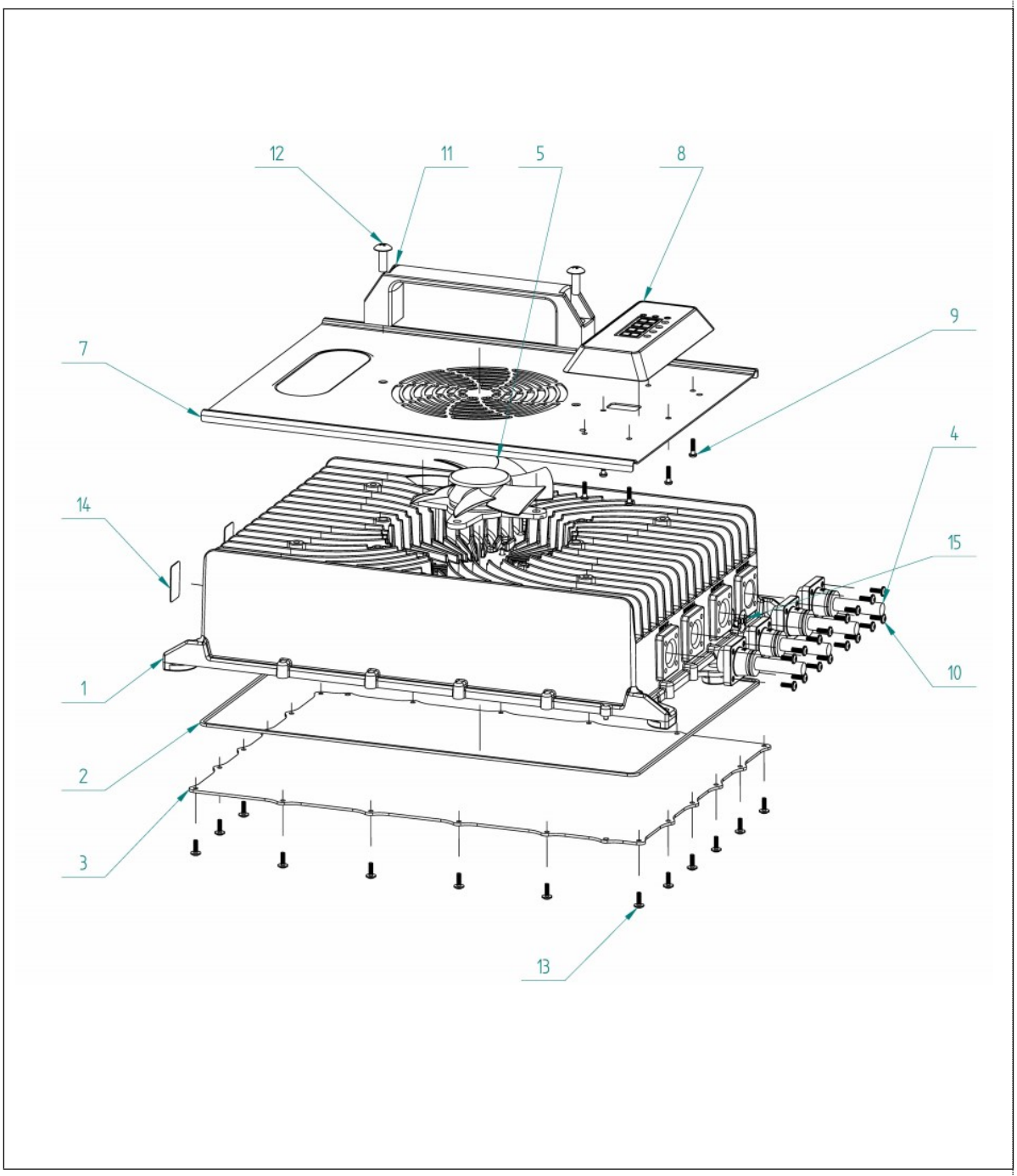

Applicable Models	WTL8060PH

No.	NAME	DRAWING NO./SPECIFICATION	QTY
1	die cast shell	silver_YZ-PH419-A	1
2	cover plate	PHealing Ring _ BlueRAL5015	1
3	cover plate	RC-PH382_A_V1.2	1
4	microcard	PS-WK32_A_V1.0	4
5	fan	YY1425M12B	1
6	screw	M3*8_Gasket φ6mm_Stainless Steel_riple Combination	2
7	cover plate	RC-PH-357-BU- A_ Blue -RAL5015-Matte	1
8	digital tube	PH Digital Tube	1
9	screw	ST2.9 * 10 Cross Pan Head Self-Tapping	6
10	screw	M3 * 12_ Stainless Steel	16
11	handle	160 Handle	1
12	screw	M6 * 18_ Stainless Steel Large Flat Head	2
13	screw	M3 * 10_ Stainless Steel	20
14	label	High Pressure Warning Label	2
15	label	Two Color Indicator Label	1
16			
17			
18			
19			
20			
21			
22			
23			

2.5 Outline drawings

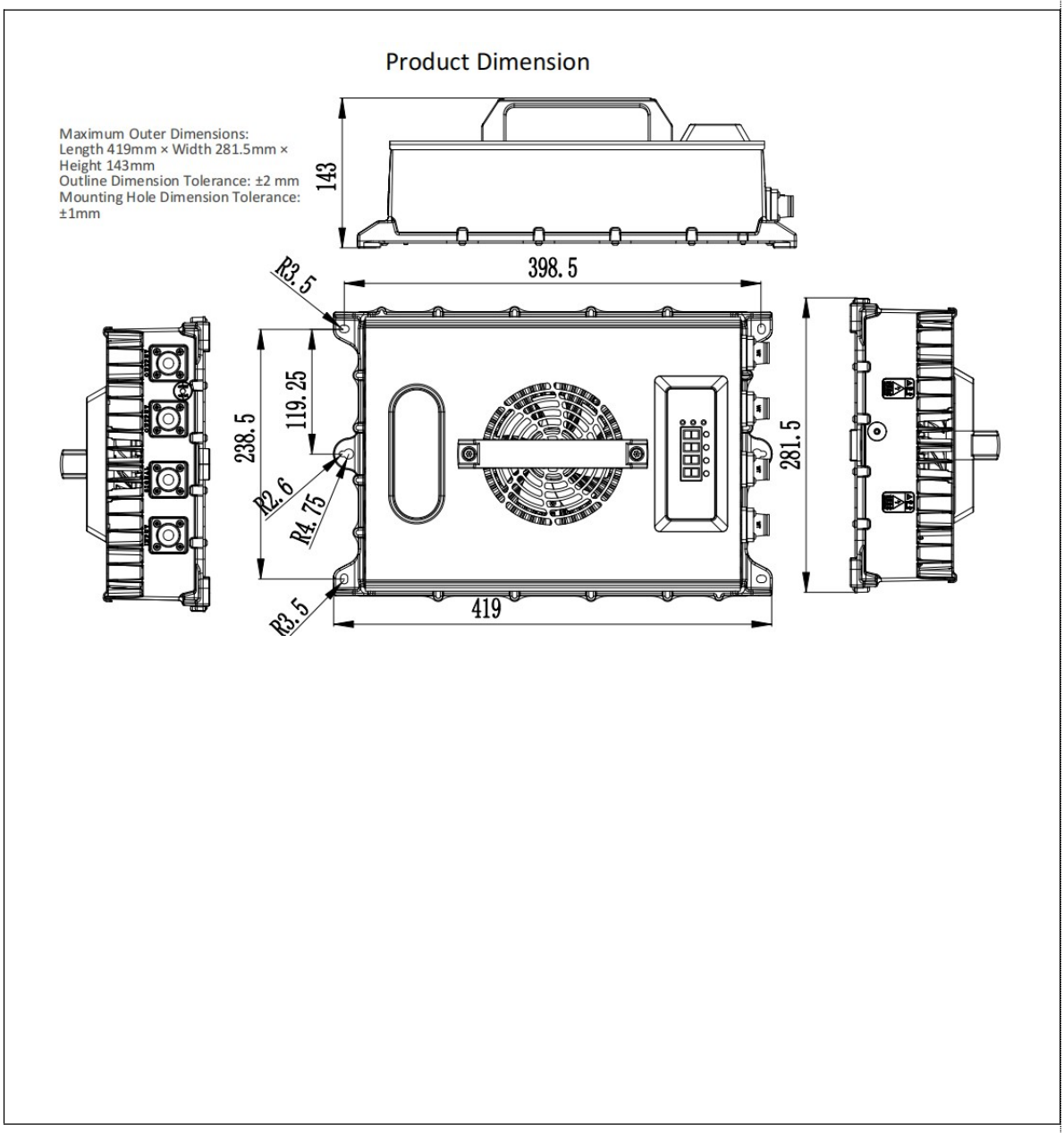

Applicable Models	PH 80V60A

NOTE: ALL STANDARD SIZES ARE IN MM

2.6 Technical data sheets of 300A series chargers

2.6.1 Charger appearance parameter table

Name Model	PH 80V60A
volume (mm)	L:419;W:281.5;H:143
WEIGHT (KG)	-
AC input (plug)	32
DC output	16mm²*2+REMA_DIN320
Enter the wire (mm²)	4*2.5
Output wires (mm²)	1*16+1*16+2*0.5
IP rating	IP65

2.6.2 Electrical performance parameter table

Name Model	PH 80V60A
Input Voltage (AC)	260-475
Input current Max (A)	9
Input current Rated (A)	9
Operating frequency (hz)	50Hz/60Hz
Input power (KW)	5
Output voltage (DC)	80
Output current (A)	60
Output power (KW)	4.5
Power factor (PF)	≥0.99
Operating noise (db)	≤45(measured working noise of the charger assembly at a distance of 1m from the horizontal position of the noise source and a height of 1m to 1.5m from the ground, under the condition of rated load and ambient noise not exceeding 40dB).

2.6.3 Electrical function parameter table

Name Model	PH 80V60A
Phase-loss protection	V
Input undervoltage protection	V
Input overvoltage protection	V
Output undervoltage protection	V
Output overvoltage protection	V
Input overcurrent protection	V
Short-circuit protection	V
Reversepolarity protection	V

2.6.4 Work environment support

Name Model	PH 80V60A
Voltage adaptive（%）	±20
Work Scenario	indoor
Operating temperature（℃）	-25~60
Operating humidity（g/m³）	10-92
elevation（*m）	2000
Dust level	IP65

2.6.5 Safety performance

Name Model	PH 80V60A
Leakage current（ma）	＜10
Ground resistance（Ω）	＜0.1
Transient over-voltages（V）	50
Insulation resistance(Ω)	＞50M
Insulation withstand voltage	3000

2.7 Model description

Take model WTL8060PHas an example:

The "WT" part indicates that the charger is made by TL POWER

The "L" part indicates that the charger is adapted to the lithium battery and can only be a lithium battery charger.

The "PH" part indicates the three product series, output power 4500W products.

The "8060" part indicates that the charger output voltage is rated at 80V and the current is 60A.

The "L" part indicates that the charger is adapted to the lithium battery and can only be a lithium battery charger.

2.8 Nameplates and logotype

MODEL: WTL8060PH	
INPUT: 260-457V 50/60Hz MAX.9A 5000W	
OUTPUT:DC80V-60A	
BATTERY TVPE:LPF Lithium battery 87.6V	
Serial Number:ZJZL8060-341600307	
Weight: -	
Serial Number:	Manufacture Date:
Manufacturer: Weihai Tl Power Co.. Ltd. No.1 shanhai Rd., chucun Town, High-tech Zone, Weihai City, Shandong Province, P.R. China	
Importer：EP Equipment Europe Address：Gustave Demeurslaan 69 -bus A1.1654Huizin gen, Belgium	

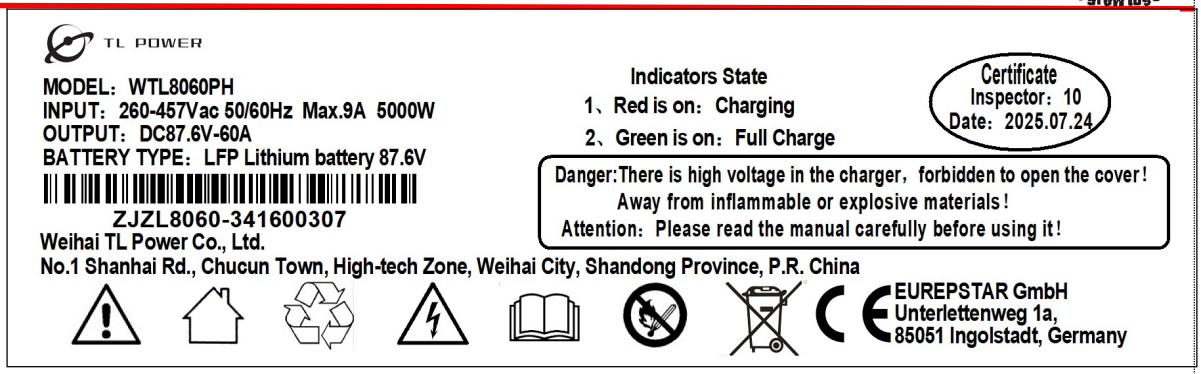

2.9 Enforce the standard

The charger is designed and manufactured in accordance with the technical specifications that have obtained the following technical certifications Therefore, when used correctly, it does not pose a threat to the safety and health of operators or third parties.

The charger is CE marked The necessary isolation spacing must be observed All circuits use primary and secondary protection devices, which are protected by a set current intensity and trigger characteristics.

All live components are fitted with a housing or cover that can only be loosened with a tool All cables and plugs are shielded and grounded as specified The charger is designed to comply with the IP 65 protection rating.

All metal parts are grounded by a ground wire system.

The charger is equipped with a CAN safety function that prevents the battery from overcharging by means of information recognition.

Standard table

serial number	Standard number	Standard name
1	IEC 60512-6-4:2002	Dynamic stress test
2	IEC 68-2-27	Impact test
3	IEC 61000-4-2	Electromagnetic Compatibility Test & Measurement Technology Electrostatic Discharge Immunity Test
4	IEC 61000-4-3	Electromagnetic Compatibility Test & Measurement Technology RF Electromagnetic Field Radiated Immunity Test
5	IEC 61000-4-4	Electromagnetic Compatibility Test and Measurement Technology Electrical Fast Transient Burst Immunity Test
6	IEC 61000-4-5	Electromagnetic Compatibility Test & Measurement Technology Surge (Shock) Immunity Test
7	IEC 61000-4-6	Electromagnetic Compatibility Test & Measurement Technology RF field-induced immunity to conducted disturbances
8	IEC 61000-4-11	Electromagnetic compatibility test and measurement technology voltage
9	IEC 61000-6-1	Generic standards - Immunity standard for residential, commercial and light-industrial environments
10	IEC 61000-6-2	Common Criteria - Immunity to Industrial Environments
11	IEC 61000-6-3	Generic standards - Emission standard for equipment in residential environments
12	IEC 61000-6-4	General Criteria - Emission standards for industrial environments
13	IEC 60529:2001	Enclosure rating

14	EN 50699	Recurrent Tests of Electrical Equipment
15	CEC-400-2017-002	2016 APPLIANCE EFFICIENCY REGULATIONS

The AC input of the above series of chargers is optional, you can choose the corresponding AC power cord according to the power of the charger and the use area, we provide the following optional models.If the following plugs do not fit for your region, please contact us.

2.10 AC input plug

Power cord model list 1

Model	AC wire diameter	Plug photo
Standard industrial plug 32A	2.5mm*5	
Standard industrial plug 32A	2.5mm*4	
Standard industrial plug 16A	2.5mm*5	
Standard industrial plug 16A	2.5mm*4	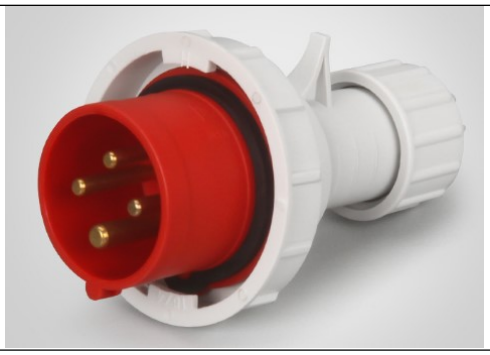

2.11 DC Output connectors

The output of the above series charger is optional, you can choose according to the current output connector of the battery, we provide the following optional models.

Output connection table

Model	Adaptation type	Battery type	Plug photo
OT series	Built	Lead-acid/lithium-ion battery	
REMA160A	External	lithium-ion battery	
REMA320A	External	lithium-ion battery	

3 Safety

3.1 Safety tips for installation

3.1.1 Fire hazard

⚠DANGER

Safety warning for external chargers

- There must be no flammable materials near the charger Included shipping and packaging materials are included:
- There must be no flammable materials within 2.5 m of the charger.
- The horizontal distance between the charger and the combustible material is at least 2.5 m It is forbidden to store flammable materials (e g on shelves) above the charger or to use flammable building materials The distance from areas with a risk of fire, explosion and explosives must be at least 5 m .

⚠DANGER

Built-in charger safety warning

- The charger cannot be installed close to the controller.
- The positive pole of the charger output connection is not allowed to be directly connected to the battery.
- After the charger output is installed, a pipe sheath needs to be installed to protect it from bare metal touching the metal powder.

3.1.2 Water ingress risk

⚠DANGER

There must not be any liquid in the vicinity of the charger.

Do not place any liquid on top of the charger.

3.1.3 Stress risk

⚠DANGER

- Avoid the charger exceeding the stress level and do not place anything on top of the charger.
- Electrical installation according to uniform regulations (wire cross-sections, safety devices, ground

connections)Avoid the input and output stress of the charger exceeding the range, and do not modify any parameters of the cable (including length, wire diameter, voltage carrying range, etc.) without the authorization of the manufacturer.Before electrical installation, please check the parameters on the nameplate (voltage/frequency/current, etc.) and compare them with the performance parameters of the power connector. Prevent the charger from ultra-high stress ranges (voltage, frequency, and current) by connecting the grid safety device in series.

3.1.4 Water ingress risk

⚠DANGER

- Missing or improperly designed leakage protection devices can lead to a risk of electric shock and fire.
- Missing or poorly designed residual current protection devices can cause fatal injuries by causing electric shock or fire in the event of a malfunction necessary, use Type B or B+RCD (Residual Current Device, RCD).
- In order to operate the charger, the location of use must have a grid interface The supply voltage and frequency must match the instructions on the rating plate (see the section "Identification and Labeling on the Charger") As specified, grid interfaces must be properly grounded .
- The charger must be protected from excessive contact voltages according to the regulations of the local power supply unit (EVU) .
- If the power cord of the charger is damaged, it must be replaced by the manufacturer or its customer service department or appropriate qualified personnel to avoid danger.

3.1.5 Installation environmental risks

⚠WARNING

Safety warning for external chargers

- The side distance to the next charger is at least twice the width of the charger If the spacing to the next charger cannot be respected, the chargers need to be staggered.
- Please install the charger in a vertical position, and there are no foreign objects around the fan to prevent the fan from getting foreign objects inside the charger when working Do not allow horizontal installation.
- Maintain a minimum lateral distance of 0,5 m from the next wall.
- Do not install this charger in a commercial environment.
- Fire extinguishing equipment must be prepared around the charger.
- Ensure optimal ventilation of the charger:
- When installing/installing the charger, you should pay attention to:
  - No corrosive gases, e g acid gases,
  - No conductive dust, such as soot or metal dust,
  - No excessive non-conductive dust is deposited,
  - No water should enter the inside of the charger
- Pay attention and comply with the regulations set by the battery manufacturer.
- In addition to the restrictions on the choice of installation site mentioned in this operating instruction national regulations must be observed.

⚠WARNING

Built-in charger safety warning

- Please install the charger in a vertical position, and there are no foreign objects around the fan to prevent the fan from getting foreign objects inside the charger when working Do not allow horizontal installation.
- The charger is not allowed to be installed on a liquid lead-acid battery.
- The charger is not allowed to be installed in the controller accessory, at least at a distance of more than 400mm away from the control.
- After the charger output is installed, a pipe sheath needs to be installed to protect it from bare metal touching the metal powder..

- Ensure optimal ventilation of the charger:
- When installing/installing the charger, you should pay attention to:
  - No corrosive gases, e g acid gases,
  - No conductive dust, such as soot or metal dust,
  - No excessive non-conductive dust is deposited,
  - No water should enter the inside of the charger
- Pay attention and comply with the regulations set by the battery manufacturer.
- In addition to the restrictions on the choice of installation site mentioned in this operating instruction national regulations must be observed.

3.1.6 Appearance warning

⚠WARNING

The charger has an IP 20 degree of protection against Moisture Ingress and is specially designed for indoor use This is identified by the character 5957 in accordance with IEC 60417.	
Please read the operating instructions carefully before use The work of the battery and charger should only be carried out by a professional following instructions The operating instructions must be placed in a prominent location and easily accessible.	
Avoid open flames or open ignition sources near the battery or charger,and do not smoke.	
Make sure there is adequate ventilation in the chargingarea and do not disconnect. Note:Dirty batteries or chargers require personal protective equipment (e.g., protective glasses and gloves).	
If your charger is not working poperly,you will face many dangers Such as electrical hazards due to mains currents or hazards due to Other causes should be repaired immediately by an authorized Professional. note: high-performance lithium-ion batteries generate extremely high short-circuit currents The metal part is always live, so do not place foreign objects or tools on the battery Take care to comply with accident prevention regulations such as DIN EN 62485-3.	
Pay attention to the correct use of the charger as prescribed Otherwise it may lead to greater danger Unprofessiona l or incorrect use will invalidate the product Do not cover the charger in any form during charging In addition, it is necessary to pay attention to the installation instructions	

Used chargers are hazardous waste and require special disposal Do not dispose of this product in household waste In accordance with the European WEEE Directive 2012/19/EU on waste electrical and electronic equipment (which has been transposed into national law) used power tools must be collected separately and recycled in an environmentally friendly manner Be sure to return your used charger to the dealer or get information about your local authorized collection and disposal system

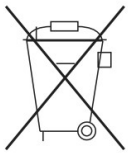

3.2 Use safety reminders

3.2.1 Pre-use safety reminders

⚠DANGER

Safety warning for external chargers

- Check before each use of the charger.
- The space for forklift charging should be kept fully ventilated.
- There is no clogging of the fan and no foreign objects around None of the vents were blocked Within a radius of at least 2,5 m around the forklift that needs to be charged, flammable materials and work equipment that could generate sparks must not be placed.
- There are no flammable, explosive, or combustible materials, chemicals, flammable vapors, and other dangerous items in the vicinity of the charger.
- Ensure that the available space around the battery charger is sufficient to provide adequate ventilation and easy access to the cable socket .
- Make sure the charger is not in the environment where any liquid gets in, and do not pour liquid into the charging case or place it on top of the charger.
- Confirm that nothing has been placed on the output cable and input power cord or place it where you can step on it.
- Confirm that there are no defects, cracks, worn, or exposed copper wires inside the output plug and cable, and that the charging output plug is clean and dry, and that there are no dirt, iron filings and other foreign objects inside, and that the cable is not entangled with any items, and that there are no knots.
- Make sure the input and output cables are not scattered and tangled, people may get entangled or trip over the scattered and surrounded cables.
- Confirm that the input plug and wire are free of defects, cracks, wear, or exposed copper wires inside the cable, and that the charging input plug is clean and dry, and that the metal contacts are free of dirt, iron filings and other foreign objects, and that the metal contacts are in a shiny state.
- Whether the enclosure is intact or not .

⚠DANGER

Built-in charger safety warning

- Check before each use of the charger.
- The space for forklift charging should be kept fully ventilated.
- Ensure that the available space around the battery charger is sufficient to provide adequate ventilation and easy access to the cable socket .
- Make sure the charger is not in the environment where any liquid gets in, and do not pour liquid into the charging case or place it on top of the charger.
- Confirm that nothing has been placed on the output cable and input power cord or place it where you can step on it.
- Confirm that there are no defects, cracks, worn, or exposed copper wires inside the output plug

and cable, and that the charging output plug is clean and dry, and that there are no dirt, iron filings and other foreign objects inside, and that the cable is not entangled with any items, and that there are no knots.

- Make sure the input and output cables are not scattered and tangled, people may get entangled or trip over the scattered and surrounded cables.
- Confirm that the input plug and wire are free of defects, cracks, wear, or exposed copper wires inside the cable, and that the charging input plug is clean and dry, and that the metal contacts are free or dirt, iron filings and other foreign objects, and that the metal contacts are in a shiny state.

3.2.2 Run and operate safety reminders

⚠DANGER

Safety warning for external chargers

- Before connecting the output, make sure that there is no fault information on the charger display Interface.
- Do not connect batteries that cannot be charged.
- Do not connect any commercial batteries.
- Before connecting the battery, make sure that the charger is compatible with the battery of that model.
- It is forbidden to smoke or use an open flame around the battery.
- Make sure that liquid does not flow into the inside of the charger.
- Before connecting the battery, it is essential to check and follow the instructions on the rating. voltage of the allowable battery voltage (see the "Identification and Labeling on the Charger" section) Place the battery in front of or next to the charger so that the battery plug is within the operating distance of the charger's charging cable (standard 2,5 m).
- The relevant safety regulations of the manufacturer of the battery and the charging station must be strictly followed.
- The charger input and output cables can only be connected or unplugged when the charger and forklift are turned off.
- If the charging process is interrupted by unplugging it, there is a risk of personal injury The resulting spark can ignite the charging gas formed during charging, which can cause a fire or explosion.
- For chargers whose charging procedures can be changed subsequently, the operator is obliged to record the applicable battery type on the housing.
- If it is determined that there are safety-related changes, damage, or other defects in the charger or in performance, the charger must not be used until repairs have been carried out in accordance with the regulations.
- If you find any damage, you can immediately feedback with the EP.
- Mark the damaged charger and deactivate it.
- The charger should only be reused after the fault has been identified and troubleshooting.
- Do not unplug the charger input power plug while the charger is working.
- Do not unplug the charger output while the charger is working.
- Do not directly touch the surface of the charger when the charger is working to avoid high temperature burns.

⚠DANGER

Built-in charger safety warning

- It is forbidden to smoke or use an open flame around the battery.
- Make sure that liquid does not flow into the inside of the charger.
- The relevant safety regulations of the manufacturer of the battery and the charging station must be strictly followed.
- If you find any damage, you can immediately feedback with the EP.
- Mark the damaged charger and deactivate it.
- The charger should only be reused after the fault has been identified and troubleshooting.
- Do not unplug the charger input power plug while the charger is working.

- Do not unplug the charger output while the charger is working.
- Do not directly touch the surface of the charger when the charger is working to avoid high temperature burns.

3.2.3 Safety reminder after use

⚠CAUTION

- Prerequisite.
- The charger is fully charged or standby.
- The charger is paused.
- Procedure.
- Turn off the charger air switch.
- Disconnect the charger input.
- Disconnect the charger output.
- When the charging process is over, roll up the charging cable or place it on the cable holder, and when placing the cable, make sure it doesn't get tangled or trip over people.

3.3 Service Safety Reminder

⚠DANGER

Dangerous voltage warning.

- Chargers are electrical devices in which voltage and current can endanger personal safety.
- The charger should only be operated by a trained and authorized professional.
- Before intervening in the charger or working on the charger, the power supply should be disconnected,and, if necessary, the battery should be disconnected.
- The inside of the charger can only be opened and repaired by obtaining EP authorized service The charger must be separated from the power supply and battery before maintenance or repair work begins.
- After 5 minutes of separation from the grid and the battery, the charger's housing can be opened from which the installed capacitors can be unloaded.
- No alterations, modifications and additions to the charger that affect safety are allowed without the manufacturer's permission! This also applies to the installation and setting of safety devices• Special care should be taken not to narrow the spacing and air gaps.
- The spare parts used must meet the technical requirements specified by the manufacturer This is always ensured by the use of original spare part.

3.4 Maintenance safety tips

⚠DANGER

Dangerous voltage warning.

- Chargers are electrical devices in which voltage and current can endanger personal safet The charger should only be operated by a trained and authorized professional.

⚠CAUTION

The wear and tear of the required maintenance parts is highly dependent on the actual operation and conditions of use of the charger. The following must be checked monthly.

- Whether the signal pin inside the output plug-in is firmly linked.
- Clean the dust of the filter screen at the air inlet of the fan, and replace it immediately if it is damaged.
- Use a dry rag to remove any foreign matter from the inside of the plug-in and the signal pin.
- Whether the grid interface is intact.
- Whether the enclosure is intact.
- Whether the insulation of the grid interface cable is intact.
- Whether all bolted joints are fixed or not.

⚠WARNING

- The following safety tests must be performed every 6 months or after the replacement of repair part. Ground resistance test.

- Insulation resistance test.
- Hipot test.
- Leakage current test.
- Output surge.
- Voltage dip test.
- Leakage protection.
- Protection against electric shock.

4 operation

4.1 Installation

4.1.1 Disassemble the box

⚠ WARNING

Wear protective gloves when using any tools.

Use a tool to disassemble the box and Remove the charger from the box.

Schematic diagram of the charger	

4.1.2 Grid safety devices

⚠DANGER

- The following work should only be performed by trained and authorized professionals.
- Do not install the device with electricity.

⚠DANGER

- Missing or improperly designed leakage protection devices can lead to a risk of electric shock and fire.
- Missing or poorly designed residual current protection devices can cause fatal injuries by causing.
- Electric shock or fire in the event of a malfunction.
- necessary, use Type B or B+RCD (Residual Current Device, RCD).
- In order to operate the charger, the location of use must have a grid interface The supply voltage and frequency must match the instructions on the rating plate (see the section "Identification and Labeling on the Charger") As specified, grid interfaces must be properly grounded.
- The charger must be protected from excessive contact voltages according to the regulations of the local power supply unit (EVU).
- If the power cord of the charger is damaged, it must be replaced by the manufacturer or its Customer.
- service department or appropriate qualified personnel to avoid danger.
- Do not install the device with electricity.

Refer to the following table for the safety device of the series power grid

Current rating	Grid safety devices	remark
> 32 to 32 A	35 A gL	A gL fuse can be used Or use a circuit autoprotector with K performance

The output current rate of the charger is detailed on the rating plate

charger		Fuse data[A]
Output current [A]		At an output voltage of 80 V
from	reach	/
0	60	PH:80V 60A

4.1.3 Install the charger

⚠DANGER

Safety warning for external chargers

- There must be no flammable materials near the charger Included shipping and packaging materials are included:
- There must be no flammable materials within 2.5 m of the charger.
- The horizontal distance between the charger and the combustible material is at least 2.5 m It is forbidden to store flammable materials (e g on shelves) above the charger or to use flammable building materials The distance from areas with a risk of fire, explosion and explosives must be at least 5 m .

⚠DANGER

Built-in charger safety warning

- The charger cannot be installed close to the controller.
- The positive pole of the charger output connection is not allowed to be directly connected to the battery.
- After the charger output is installed, a pipe sheath needs to be installed to protect it from bare metal touching the metal powder.

⚠DANGER

There must not be any liquid in the vicinity of the charger.

Do not place any liquid on top of the charger.

⚠DANGER

- Avoid the charger exceeding the stress level and do not place anything on top of the charger.
- Electrical installation according to uniform regulations (wire cross-sections, safety devices, ground connections)Avoid the input and output stress of the charger exceeding the range, and do not modify any parameters of the cable (including length, wire diameter, voltage carrying range, etc.) without the authorization of the manufacturer.Before electrical installation, please check the parameters on the nameplate (voltage/frequency/current, etc.) and compare them with the performance parameters of the power connector. Prevent the charger from ultra-high stress ranges (voltage, frequency, and current) by connecting the grid safety device in series.

⚠DANGER

- Missing or improperly designed leakage protection devices can lead to a risk of electric shock and fire.
- Missing or poorly designed residual current protection devices can cause fatal injuries by causing electric shock or fire in the event of a malfunction necessary, use Type B or B+RCD (Residual Current Device, RCD).
- In order to operate the charger, the location of use must have a grid interface The supply voltage and frequency must match the instructions on the rating plate (see the section "Identification and Labeling on the Charger") As specified, grid interfaces must be properly grounded .
- The charger must be protected from excessive contact voltages according to the regulations of the local power supply unit (EVU) .
- If the power cord of the charger is damaged, it must be replaced by the manufacturer or its customer service department or appropriate qualified personnel to avoid danger.

⚠WARNING

Safety warning for external chargers

- The side distance to the next charger is at least twice the width of the charger If the spacing to the next charger cannot be respected, the chargers need to be staggered.
- Please install the charger in a vertical position, and there are no foreign objects around the fan to prevent the fan from getting foreign objects inside the charger when working Do not allow horizontal installation.
- Maintain a minimum lateral distance of 0,5 m from the next wall.

- Do not install this charger in a commercial environment.
- Fire extinguishing equipment must be prepared around the charger.
- Ensure optimal ventilation of the charger:
- When installing/installing the charger, you should pay attention to:
  - No corrosive gases, e g acid gases,
  - No conductive dust, such as soot or metal dust,
  - No excessive non-conductive dust is deposited,
  - No water should enter the inside of the charger
- Pay attention and comply with the regulations set by the battery manufacturer.
- In addition to the restrictions on the choice of installation site mentioned in this operating instruction national regulations must be observed.

⚠WARNING

Built-in charger safety warning

- Please install the charger in a vertical position, and there are no foreign objects around the fan to prevent the fan from getting foreign objects inside the charger when working Do not allow horizontal installation.
- The charger is not allowed to be installed on a liquid lead-acid battery.
- The charger is not allowed to be installed in the controller accessory, at least at a distance of more than 400mm away from the control.
- After the charger output is installed, a pipe sheath needs to be installed to protect it from bare metal touching the metal powder..
- Ensure optimal ventilation of the charger:
- When installing/installing the charger, you should pay attention to:
  - No corrosive gases, e g acid gases,
  - No conductive dust, such as soot or metal dust,
  - No excessive non-conductive dust is deposited,
  - No water should enter the inside of the charger
- Pay attention and comply with the regulations set by the battery manufacturer.
- In addition to the restrictions on the choice of installation site mentioned in this operating instruction national regulations must be observed.

⚠WARNING

- This series of chargers is suitable for charging industrial lithium batteries Any other use of the equipment is non-compliant and may result in injury, damage to the equipment, or other property Damage.
- The rated operating input voltage range, frequency range, maximum input current, and input power are all specified in detail on the nameplate.
- The rated working output voltage range, current range, and constant power are all specified in detail on the nameplate.
- Used in industrial environments.
- The permissible temperature range is between -10°C and 45°C .
- Relative humidity is 5%~95%.
- The altitude should not exceed 2000 m .
- Input voltage fluctuation range of ±15%.
- Storage temperature: -20 °C~75 °C.
- Storage humidity 5%~95%.

Check whether the charger is internal or external, and select the following installation method according to the charger adaptation type.

1: Built-in charger mode: connect the positive and negative poles of the output and the grounding wire. Connect the input AC power cable.

2: External charger mode: Externally connect the AC power cable, and the charger needs to be placed at a height of 500mm above the ground.

Note: If you want to replace the cable, please refer to Section 2.6 for the relevant technical parameters.

Note: Charger adaptation AC power cords vary by model, see Section 2.6.

Note: If the environmental conditions exceed the above range, you should contact us in advance to negotiate and solve.

4.2 Operators Daily Checklist

⚠DANGER

Safety warning for external chargers

- The space for forklift charging should be kept fully ventilated.
- There is no clogging of the fan and no foreign objects around None of the vents were blocked Within a radius of at least 2,5 m around the forklift that needs to be charged, flammable materials and work equipment that could generate sparks must not be placed.
- There are no flammable, explosive, or combustible materials, chemicals, flammable vapors, and other dangerous items in the vicinity of the charger.
- Ensure that the available space around the battery charger is sufficient to provide adequate ventilation and easy access to the cable socket .
- Make sure the charger is not in the environment where any liquid gets in, and do not pour liquid into the charging case or place it on top of the charger.
- Confirm that nothing has been placed on the output cable and input power cord or place it where you can step on it.
- Confirm that there are no defects, cracks, worn, or exposed copper wires inside the output plug and cable, and that the charging output plug is clean and dry, and that there are no dirt, iron filings and other foreign objects inside, and that the cable is not entangled with any items, and that there are no knots.
- Make sure the input and output cables are not scattered and tangled, people may get entangled or trip over the scattered and surrounded cables.
- Confirm that the input plug and wire are free of defects, cracks, wear, or exposed copper wires inside the cable, and that the charging input plug is clean and dry, and that the metal contacts are free of dirt, iron filings and other foreign objects, and that the metal contacts are in a shiny state.
- Whether the enclosure is intact or not .

⚠DANGER

Built-in charger safety warning

- Check before each use of the charger.
- The space for forklift charging should be kept fully ventilated.
- Ensure that the available space around the battery charger is sufficient to provide adequate ventilation and easy access to the cable socket .
- Make sure the charger is not in the environment where any liquid gets in, and do not pour liquid into the charging case or place it on top of the charger.
- Confirm that nothing has been placed on the output cable and input power cord or place it where you can step on it.
- Confirm that there are no defects, cracks, worn, or exposed copper wires inside the output plug and cable, and that the charging output plug is clean and dry, and that there are no dirt, iron filings and other foreign objects inside, and that the cable is not entangled with any items, and that there are no knots.
- Make sure the input and output cables are not scattered and tangled, people may get entangled or trip over the scattered and surrounded cables.
- Confirm that the input plug and wire are free of defects, cracks, wear, or exposed copper wires inside the cable, and that the charging input plug is clean and dry, and that the metal contacts are free or dirt, iron filings and other foreign objects, and that the metal contacts are in a shiny state.

⚠WARNING

Never start the charger until any damage or malfunction of the charger has been resolved.

4.3 Run the charger

⚠DANGER

Safety warning for external chargers

- Do not connect batteries that cannot be charged.
- Do not connect any commercial batteries.
- Before connecting the battery, make sure that the charger is compatible with the battery of that model.
- It is forbidden to smoke or use an open flame around the battery.
- Make sure that liquid does not flow into the inside of the charger.
- Before connecting the battery, it is essential to check and follow the instructions on the rating. voltage of the allowable battery voltage (see the "Identification and Labeling on the Charger" section) Place the battery in front of or next to the charger so that the battery plug is within the operating distance of the charger's charging cable (standard 2,5 m).
- The relevant safety regulations of the manufacturer of the battery and the charging station must be strictly followed.
- The charger input and output cables can only be connected or unplugged when the charger and forklift are turned off.
- If the charging process is interrupted by unplugging it, there is a risk of personal injury The resulting spark can ignite the charging gas formed during charging, which can cause a fire or explosion.
- For chargers whose charging procedures can be changed subsequently, the operator is obliged to record the applicable battery type on the housing.
- If it is determined that there are safety-related changes, damage, or other defects in the charger or in performance, the charger must not be used until repairs have been carried out in accordance with the regulations.
- If you find any damage, you can immediately feedback with the EP.
- Mark the damaged charger and deactivate it.
- The charger should only be reused after the fault has been identified and troubleshooting.
- Do not unplug the charger input power plug while the charger is working.
- Do not unplug the charger output while the charger is working.
- Do not directly touch the surface of the charger when the charger is working to avoid high temperature burns.

⚠DANGER

Built-in charger safety warning

- It is forbidden to smoke or use an open flame around the battery.
- Make sure that liquid does not flow into the inside of the charger.
- The relevant safety regulations of the manufacturer of the battery and the charging station must be strictly followed.
- If you find any damage, you can immediately feedback with the EP.
- Mark the damaged charger and deactivate it.
- The charger should only be reused after the fault has been identified and troubleshooting.
- Do not unplug the charger input power plug while the charger is working.
- Do not unplug the charger output while the charger is working.
- Do not directly touch the surface of the charger when the charger is working to avoid high temperature burns.

⚠WARNING

Wipe off any water stains on your hands to avoid electric shock

Connect the charger AC input to the power grid.	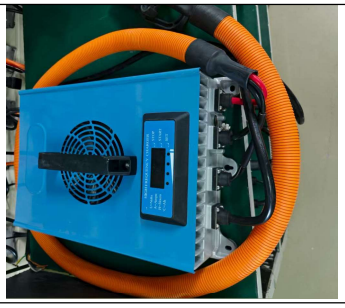
Using the charger output connector, connect the battery.	
Schematic diagram of the completion of the connection	

Note: The plug needs to be securely connected at a height of 1 meter from the ground.

4.4 Working status

⚠ WARNING

- Do not unplug the charger input power plug while the charger is working.
- Do not unplug the charger output while the charger is working.
- Do not directly touch the surface of the charger when the charger is working to avoid high temperature burns.

Light Strip Color	Charger State	Photo
RED LIGHTING ON	Charging	
GREEN LIGHTING ON	Fully Charged	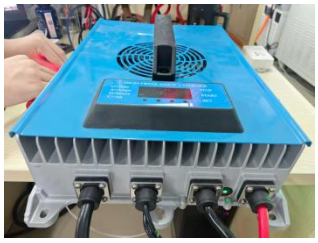
YELLOW FLASHING	Charger Fault	
YELLOW LIGHTING ON	Bettery Fault	

4.5 Running curves

The charger will output the corresponding voltage and current according to the lithium battery CAN message, the above curve is only test data, it does not mean that the charger will be charged according to this curve.	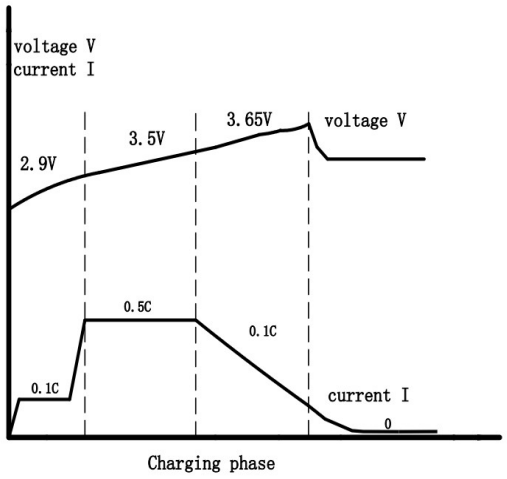

Note: In the curve, V represents the voltage of the monomer, 24V monomer = 8 strings, 48Vmonomer =15 strings, 80V monomer = 24 strings. The calculated curve voltage should = number of cells * cell Voltage.

Note: In the curve, C is equal to the actual capacity of the battery. In the calculation, the current Operating current should = the actual capacity of the battery * the current execution multiple, For example, the 80V400AH battery needs to be charged, according to the above graph, the working logic of the charger should be that when the voltage is lower than 69.6V, the charger will output 40Acurrent. When the battery voltage is greater than 69.6V and lower than 84V, the charger will output 200A current. When the battery voltage is greater than 84V and lower than 87.6V, the charger will output 40A current and maintain it until the battery is fully charged.

Note: The charger does not provide lead-acid battery curve query, please refer to the lead-acid battery manual.

4.6 Once the operation is complete

Disconnect the charger input.

Disconnect the charger output.

When the charging process is over, roll up the charging cable or place it on the cable holder, and when placing the cable, make sure it doesn't get tangled or trip over people.

Use the charger that was placed after completion	

5 Description of the fault

5.1 Lead battery fault table

Fault Code	Item	Description
1	Abnormal charging machine	Input AC power failure, internal temperature failure, and issues with one end of the charger causing charging to not continue
2	Battery abnormality	Charging failure caused by improper battery connection

Lithium battery fault table

Fault Code	Item	Description
1	Abnormal charging machine	Input AC power failure, internal temperature failure, communication failure, and issues with one end of the charger causing charging to not continue
2	Battery abnormality	Charging failure caused by improper battery connection
3	Non-load	The charger failed to detect the battery, CAN communication anomaly, The charger is on standby.

5.2 Simple breakdown repairs

5.2.1 Fault 1: Abnormal charging machine

BMS (Battery Management System) faults , please refer to the battery manual

⚠DANGER

- The following faults need to be carried out by a professional electrician.
- Before intervening with the charger, disconnect the charger input and output.
- Do not touch the metal surface on the outside of the charger to avoid high temperature burns.

AC Input Overvoltage/Undervoltage:
yellow led flashing
Solution:When the input voltage exceeds the set value of the charger, the charger will automatically enter a protective state and stop running. After eliminating the abnormal AC power, the charger will automatically restart
Check if the input voltage is less than the working voltage of the charger. If it is less than this value, eliminate the AC fault and recharge the charger

Output Overvoltage/Undervoltage:
yellow led flashing
Solution:When the battery voltage is greater than the maximum value detected internally by the charger or less than the minimum value detected internally, the charger cannot charge the battery normally. At this time, stop charging the battery with too high an overvoltage. For the battery with too low a voltage, replenish it to the normal voltage and then charge it with the charger.

Over temperature protection: yellow led flashing Solution: The internal temperature of the charger is too high due to excessive external temperature, damaged charger fan, or the charger is in a closed and confined space. Place the charging area in a ventilated environment, and the charger will take care of the skin after the internal temperature drops. If the fan of the charger fails, it is recommended to return to the factory for repair.	
Internal fault of charger: yellow led flashing Solution: After troubleshooting input, output, temperature and other faults, the charger does not start normally, and the charger will stand for 2 hours. Re-connect to the AC power, but the charger still does not start. It is recommended to return to the factory for maintenance.	

5.2.2 Fault 2:Battery abnormality

⚠DANGER

- The following faults need to be carried out by a professional electrician
- Before intervening with the charger, disconnect the charger input and output
- Do not touch the metal surface on the outside of the charger to avoid high temperature burns

Battery abnormality: yellow lighting on Solution: please refer to the battery manual	

5.2.3 Fault 3: Non-load

⚠DANGER

- Before intervening with the charger, disconnect the charger input and output.
- Do not touch the metal surface on the outside of the charger to avoid high temperature burns.
- When detecting the output voltage, voltage, and current, do not touch any of the metal contacts of the connector with your hands.

Communication failure: yellow led flashing Solution: Check whether the CAN-H and CAN-L have faults such as reverse connection and poor contact. After the inspection, they still cannot be charged normally. Check whether the charging protocol matches and whether the baud rate matches.	

5.3 Service support

Most of the above situations can be resolved with simple troubleshooting. If it is determined that the issue does not fall into the above category, it may indicate that the charger's hardware is damaged. Customers who meet the after-sales service conditions are kindly requested to contact EP in time for hardware replacement.

If you are unable to identify the problem, need to replace the hardware, or need to change the software, please contact your local distributor. In this case, remote video communication may be required.

When contacting the EP, please provide a detailed description of the problem. For charger fault repairs, please provide charger nameplate information, battery information, and capture CAN communication information during charging if necessary to identify specific problem

6 Waste disposal

NOTE

Chargers should be collected separately from household or commercial waste and properly recycled or disposed of Take the old charger (if any) in-house for disposal and hand it over to a professional company (professional waste disposal company) In principle, it is also possible to return the old charger to the manufacturer. To do so, please contact the manufacturer's customer service department. Specific protocols must be adhered to.

According to the European WEEE Directive (2012/19/EU), electrical and electronic equipment must be collected, recycled or professionally disposed of separately from unsorted municipal waste, where pollutants resulting from improper disposal can cause lasting damage to health and the environment.

Detailed information can be obtained at the Waste Disposal Specialist Plant or the relevant authority The packaging of the charger should be disposed of separately. Paper, cardboard and plastic are recycled.

Let's grow together

PH series

Battery charger

80V-60A

Operation Manual

(en-GB)

Foreword

By carefully reading the operating instructions, the user can acquire the necessary technical knowledge to safely operate the charger. The operating instructions contain concise and well organized information sections are arranged alphabetically, and page numbers are numbered.

The company will continue to develop chargers therefore, Manufacturing company must reserve the right to modify the appearance, equipment, and technology. For these reasons, no claims for any device-specific performance may be derived from the contents of these operating instructions.

Safety notices and text mark-ups

Safety instructions and important explanations are indicated by the following graphics:

⚠DANGER

Means that failure to comply can cause risk to life and/or major damage to property.

⚠WARNING

Please strictly adhere to these safety instructions to avoid personal injury or major damage to equipment.

⚠CAUTION

Please pay attention to the important safety instructions.

NOTE

Pay attention to Instruction.

ALL RIGHTS RESERVED

2024.07 01st EDITION

Content

1 General 3
1.1 Introduction 3
1.2 Important safety tips 4
1.3 Permissable operating conditions 5
1.4 Intended use 5
1.5 Impermissible use 5
2 Charger description 7
2.1 Charger appearance 7
2.2 Feature description 7
2.3 Description of how it works 7
2.4 Charger parts information 9
2.5 Outline drawings 10
2.6 Technical data sheets of 300A series chargers 12
2.7 Model description 13
2.8 Nameplates and logotype 13
2.9 Enforce the standard 14
2.11 DC Output connectors 16
3 Safety 16
3.1 Safety tips for installation 16
3.2 Use safety reminders 19
3.2.1 Pre-use safety reminders 19
3.2.2 Run and operate safety reminders 20
3.3 Service Safety Reminder 21
3.4 Maintenance safety tips 21
4 operation 22
4.1 Installation 22
4.1.1 Disassemble the box 22
4.1.2 Grid safety devices 23
4.1.3 Install the charger 24
4.2 Operators Daily Checklist 26
4.3 Run the charger 27
4.4 Working status 29
4.5 Running curves 30
4.6 Once the operation is complete 30
5 Description of the fault 31
5.1 Lead battery fault table 31
5.2 Simple breakdown repairs 31
5.2.1 Fault 1: Abnormal charging machine 31
5.2.2 Fault 2:Battery abnormality 32
5.3 Service support 33

6 Waste disposal..... 33

1 General

1.1 Introduction

This operation guide helps the model to use PH models of 80V60A charger as a reference object to achieve safe operation of the charger specifications.

This manual must be readily available and kept in a prepared place This manual is intended for use by all persons who have access to the operating process of the charger, including transportation, installation and installation, operation, maintenance, and disassembly.

In commercial use, in addition to the operating instructions, the relevant guidelines, regulations, and laws in force in the place of use or the country of use should be followed to ensure safe and standardized operations.
Information other than this operating manual is provided by a professional on the part of the manufacturer or supplier.

All materials are protected by copyright Without express authorization, it is forbidden to retransmit and reproduce the material and its excerpts, to quote and disseminate its contents.

Obligations and Responsibilities of the User of the Equipment: In this Manual, the term "User" refers to any natural or legal person who directly uses or appoints another person to use the Equipment In special cases such as rental, sale or rental, "Equipment User" represents a party that has specific operational obligations under the terms of the contract concluded between the Owner of the Equipment and the User.

In addition, the user of the equipment must strictly comply with the provisions for the prevention of accidents, other safety technical regulations, and guidelines for the use, maintenance and repair of the equipment The user must ensure that all operators carefully read and fully understand the contents of this manual.

The Company shall not be liable for any damages arising from the improper operation of the equipment by the customer or the user of the equipment or a third party without the permission of the Company's customer service department.

If additional equipment needs to be installed or added, and if it affects or complements the functionality of the equipment, prior written consent must be obtained from the manufacturer and, depending on the actual situation, approval from the relevant certification body may also be required.

1.2 Important safety tips

The charger is produced in accordance with EU directives and state-of-the-art technology and provides additional safety tips to ensure the absolute safety of personnel.

⚠DANGER

- The following conditions can result in serious personal and property damage:
- Improper use or incorrect operation.
- Turn on the charger without permission.
- Installation errors or improper maintenance and repairs .
- Replace the input and output wires without permission.
- Charge the damaged battery.

⚠DANGER

Attention must be paid to and all instructions contained in this operating instruction regarding proper use, residual risks, installation, operation, and maintenance.

⚠DANGER

Charging a battery that is not suitable for this charger will cause damage to the charger and battery The battery will swell or burst:

- It can only charge EP brand electric industrial forklift batteries.
- Please determine the battery type that the charger is compatible with before use.
- Do not cross-use or change the charger adaptation type.

⚠WARNING

Dangerous voltage warning

Chargers are electrical devices in which voltage and current can endanger personal safety:

- The charger should only be operated by a trained and authorized professional.
- Before intervening in the charger or working on the charger, the power supply should be disconnected and if necessary, the battery should be disconnected.
- The charger can only be opened and repaired by EP Customer Service.

⚠WARNING

Damage or other defects in the charger can lead to accidents

If it is determined that there are safety-related changes, damage, or other defects in the charger or in performance, the charger must not be used until repairs have been carried out in accordance with the Regulations:

- Identified deficiencies must be reported to the EP immediately.
- Mark the damaged charger and deactivate it.
- The charger should only be reused after the fault has been identified and troubleshooting.

⚠CAUTION

This charger is not suitable for use by:Persons (including children) with impairments in physical, sensory, or mental abilities, or lack of electrical experience and knowledge system and battery charging unless someone supervises or instructs them in using the charger Be responsible for their safety Children should be supervised to ensure they are not playing with the charger.

1.3 Permissable operating conditions

This series of chargers is suitable for charging industrial lithium batteries Any other use of the equipment is non-compliant and may result in injury, damage to the equipment, or other property damage:

- The rated operating input voltage range, frequency range, maximum input current, and input power are all specified in detail on the nameplate .
- The rated working output voltage range, current range, and constant power are all specified in detail on the nameplate.
- Used in industrial environments .
- The permissible temperature range is between -10°C and 45°C .
- Relative humidity is 5%~95%.
- The altitude should not exceed 2000 m .
- Input voltage fluctuation range of ±15% .
- Storage temperature: -20 °C~75 °C.
- Storage humidity 5%~95%.

Note: When the environmental conditions exceed the above range, you should contact us in advance to negotiate and solve.

1.4 Intended use

- Damage and other defects to the charger or accessories must be reported to the supervisor immediately. Chargers and accessories that are not safe to operate should not be used until they have been properly serviced.
- Safety installations and switches may not be removed or rendered unusable. Specified settings may only be changed with the approval of the manufacturer.
- The charger must not use more than the limit set by the manufacturer, and the fluctuation range must not exceed ±15%.
- Warning signs need to be added to the charger working area.
- In order to maintain LVD compliance with EMC, any replacement of exterior parts requires prior contact with the manufacturer.
- When using the utility grid, the regulations must be followed, as well as country-specific restrictions for winter.

1.5 Impermissible use

- If the charger is used in a way that is not permitted, the user, not the manufacturer, is responsible. The following list is for informational purposes only and is not intended to be exhaustive:
- Charge commercial batteries.
- Charge non-EP brand batteries.
- Modify or destroy safety devices.
- Modification or replacement of unauthorized parts.
- Extend or shorten the AC/DC end cable.
- The usage environment is beyond the scope of Section 1.3.
- Personnel have not undergone safety training or have not consulted the instructions for operation.

1.6 Definition of the person who is used

1.6.1 Operator

The charger should only be operated by a person who is at least 18 years of age, has been trained in electrical safety and operational safety, and who demonstrates their basic electrical skills to the user or an authorized representative. It is also necessary to have a specific understanding of the working logic of the charger to be used.

1.6.2 Users

The user is the natural person or legal entity responsible for pumping the charger. Users can operate the charger themselves or delegate the task of operating the charger to someone else, such as an operator. In the case of specific cases such as rentals, the liability is borne by the user in accordance with a valid contract between the owner of the car and the operator of the charger.

1.6.2 Specialist

A qualified person is defined as a service engineer or a person who meets the following requirements:

- Full professional qualifications that demonstrate their expertise. The certificate should include a professional qualification or similar document.
- Professional experience shows that the qualified person has gained hands-on experience with the charger during their career During this time, the person has become familiar with the various symptoms that need to be examined, such as based on the results of hazard assessments or routine inspections.
- Recent professional involvement in the field of relevant charger testing or R&D and appropriate further qualification is essential. Qualified personnel must have experience in conducting relevant tests or conducting similar tests.
- In addition, the person must be aware of the latest technological developments and the risks being assessed for the charger to be made.

1.6.3 User right,duties and rules of behaviour

Everyone operating the charger has read and understood this manual and has been approved with the relevant charger operator training. Operate the charger in a safe manner so as not to endanger the life and health of the operator and/or others. Follow all warnings and instructions in this manual This manual is available for use by the operator.

1.6.4 Operator Rights, Duties and Code of Conduct

For the purposes of these operating instructions, the operating company is defined as any natural or legal person who uses the charger on its own or on its behalf. In exceptional cases (e.g. lease or rental). The operating company is considered to be a person who performs specific operational duties under an existing contractual agreement between the charger owner and the operator.

The operating company must ensure that the charger is used only for its intended purpose and to prevent danger to the health and safety of the operator and third parties. In addition, accident prevention regulations, safety regulations, and operation, maintenance, and repair guidelines must be complied with. The operating company must ensure that all operators have read and understood these operating instruction

2 Charger description

2.1 Charger appearance

2.2 Feature description

The fixed OBC charger is characterized by small size, high conversion efficiency, and a higher level of IP protection, which makes it suitable for a wider range of environments, and it also has power-off compensation and fault indicators to make the charging status clear at a glance. The charger adopts forced air cooling cooling, and has the functions of input over-voltage, under-voltage protection, output over-voltage, under-voltage, over-current, output short circuit, fan fault protection and so on.

2.3 Description of how it works

2.3.1 Design Principles

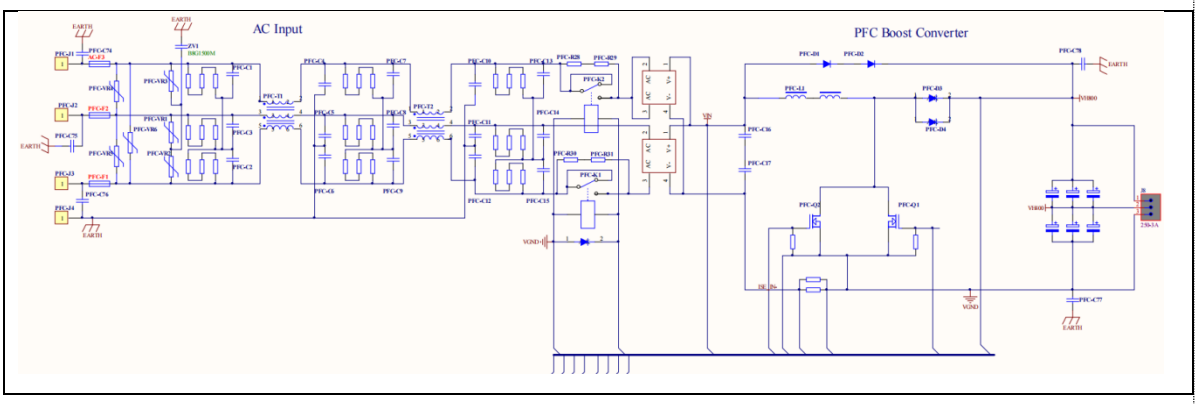

2.3.2 How it works

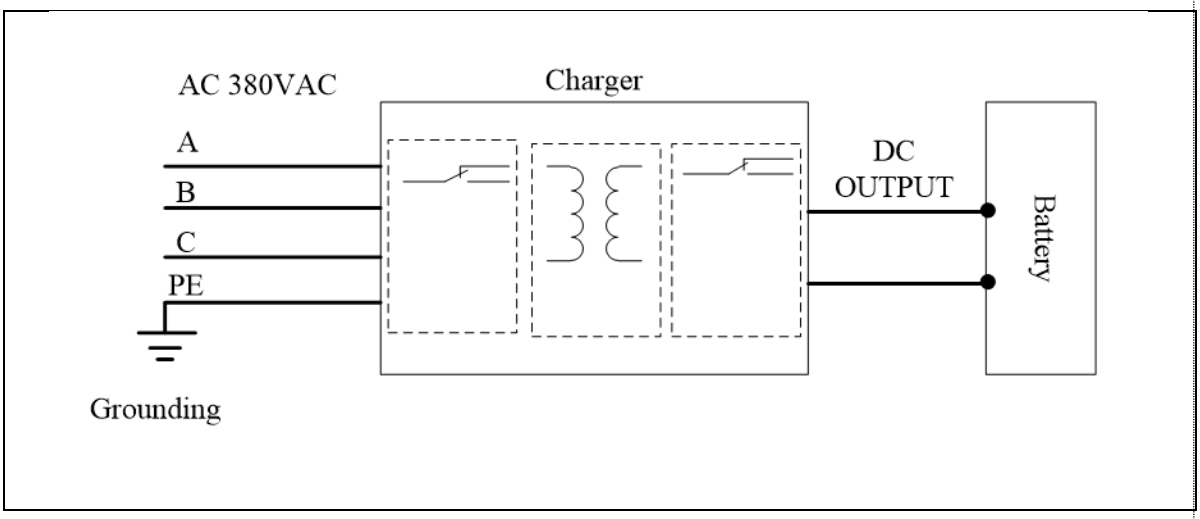

The implementation principle of the high-frequency PFC (Power Factor Correction) module charger generally follows these steps:

Input current rectification: Firstly, the AC input power is rectified into a DC power source.
High-frequency conversion: The DC power source is converted into a high-frequency AC power source, typically achieved through high-frequency switching power supplies using devices such as MOSFETs.
PFC control: The PFC controller monitors the input current and voltage and controls the high-frequency switch to minimize the phase difference between the input current and voltage, thereby maximizing the power factor.

DC-DC conversion: The power source, after power factor correction, enters a DC-DC converter to convert the high-frequency AC power into the desired DC voltage. This typically involves an inductor, a capacitor, a switching element (such as a MOSFET), and control circuitry.

Control and protection: The charger also includes control and protection circuits to ensure that the output voltage and current are within safe ranges and to monitor various conditions during the charging process, such as overvoltage, overcurrent, overtemperature, etc., and take appropriate measures to protect the charger and battery.

Note: The above instructions apply to all chargers under the PH models Technical parameters.

2.4 Charger parts information

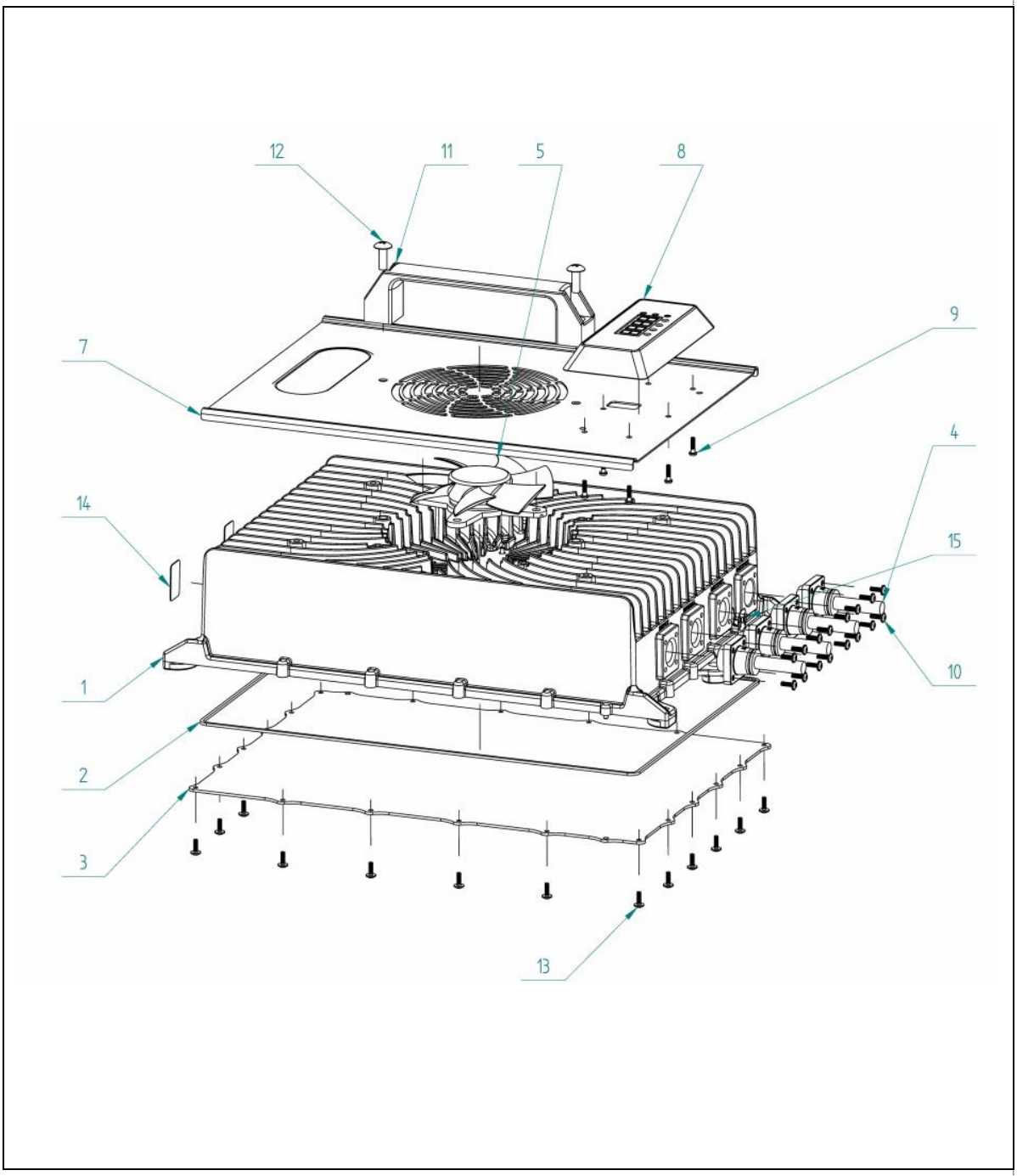

Applicable Models	8060PH

No.	NAME	DRAWING NO./SPECIFICATION	QTY
1	die cast shell	silver_YZ-PH419-A	1
2	cover plate	PHealing Ring _ BlueRAL5015	1
3	cover plate	RC-PH382_A_V1.2	1
4	microcard	PS-WK32_A_V1.0	4
5	fan	YY1425M12B	1
6	screw	M3*8_Gasket φ6mm_Stainless Steel_riple Combination	2
7	cover plate	RC-PH-357-BU- A_ Blue -RAL5015-Matte	1
8	digital tube	PH Digital Tube	1
9	screw	ST2.9 * 10 Cross Pan Head Self-Tapping	6
10	screw	M3 * 12_ Stainless Steel	16
11	handle	160 Handle	1
12	screw	M6 * 18_ Stainless Steel Large Flat Head	2
13	screw	M3 * 10_ Stainless Steel	20
14	label	High Pressure Warning Label	2
15	label	Two Color Indicator Label	1
16			
17			
18			
19			
20			
21			
22			
23			

2.5 Outline drawings

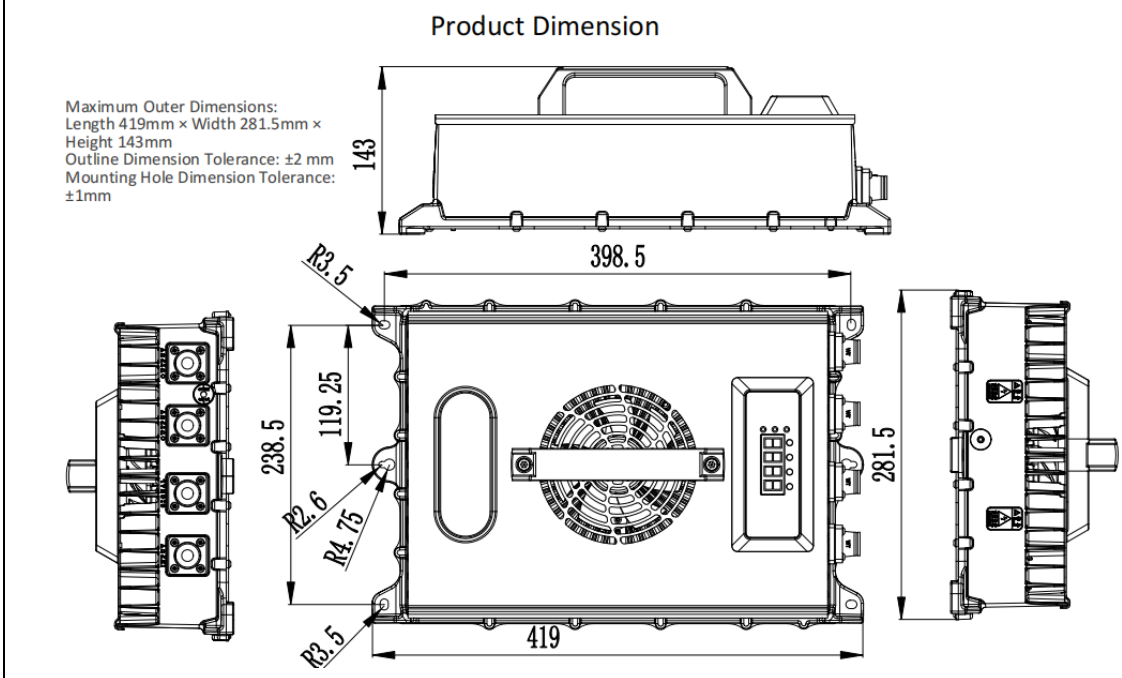

Applicable Models	PH 80V60A

NOTE: ALL STANDARD SIZES ARE IN MM

2.6 Technical data sheets of 300A series chargers

2.6.1 Charger appearance parameter table

Name Model	PH 80V60A
volume (mm)	L:419;W:281.5;H:143
WEIGHT (KG)	-
AC input (plug)	32
DC output	16mm²*2+REMA_DIN320
Enter the wire (mm²)	4*2.5
Output wires (mm²)	1*16+1*16+2*0.5
IP rating	IP65

2.6.2 Electrical performance parameter table

Name Model	PH 80V60A
Input Voltage (AC)	260-475
Input current Max (A)	9
Input current Rated (A)	9
Operating frequency (hz)	50Hz/60Hz
Input power (KW)	5
Output voltage (DC)	80
Output current (A)	60
Output power (KW)	4.5
Power factor (PF)	≥0.99
Operating noise (db)	≤45(measured working noise of the charger assembly at a distance of 1m from the horizontal position of the noise source and a height of 1m to 1.5m from the ground, under the condition of rated load and ambient noise not exceeding 40dB).

2.6.3 Electrical function parameter table

Name Model	PH 80V60A
Phase-loss protection	V
Input undervoltage protection	V
Input overvoltage protection	V
Output undervoltage protection	V
Output overvoltage protection	V
Input overcurrent protection	V
Short-circuit protection	V
Reversepolarity protection	V

2.6.4 Work environment support

Name	PH

	80V60A
Voltage adaptive（%）	±20
Work Scenario	indoor
Operating temperature（℃）	-25~60
Operating humidity（g/m³）	10-92
elevation（*m）	2000
Dust level	IP65

2.6.5 Safety performance

Name Model	PH 80V60A
Leakage current（ma）	＜10
Ground resistance（Ω）	＜0.1
Transient over-voltages（V）	50
Insulation resistance(Ω)	＞50M
Insulation withstand voltage	3000

2.7 Model description

Take model WTL8060PHas an example:

The "WT" part indicates that the charger is made by TL POWER

The "L" part indicates that the charger is adapted to the lithium battery and can only be a lithium battery charger.

The "PH" part indicates the three product series, output power 4500W products.

The "8060" part indicates that the charger output voltage is rated at 80V and the current is 60A.

The "L" part indicates that the charger is adapted to the lithium battery and can only be a lithium battery charger.

2.8 Nameplates and logotype

MODEL: 8060PH	
INPUT: 260-457V 50/60Hz MAX.9A 5000W	
OUTPUT:DC80V-60A	
BATTERY TVPE:LPF Lithium battery 87.6V	
Serial Number:ZJZL8060-341600307	
Weight: -	
Serial Number:	Manufacture Date:
Manufacturer: Weihai Tl Power Co.. Ltd. No.1 shanhai Rd., chucun Town, High-tech Zone, Weihai City, Shandong Province, P.R. China	
Importer：EP Equipment Europe Address：Gustave Demeurslaan 69 -bus A1.1654Huizin gen, Belgium	

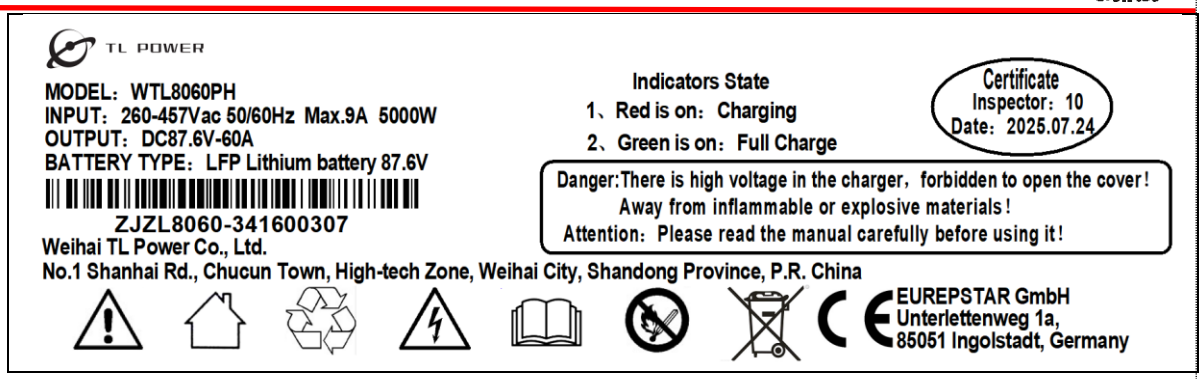

2.9 Enforce the standard

The charger is designed and manufactured in accordance with the technical specifications that have obtained the following technical certifications Therefore, when used correctly, it does not pose a threat to the safety and health of operators or third parties.

The charger is CE marked The necessary isolation spacing must be observed All circuits use primary and secondary protection devices, which are protected by a set current intensity and trigger characteristics.

All live components are fitted with a housing or cover that can only be loosened with a tool All cables and plugs are shielded and grounded as specified The charger is designed to comply with the IP 65 protection rating.

All metal parts are grounded by a ground wire system.

The charger is equipped with a CAN safety function that prevents the battery from overcharging by means of information recognition.

Standard table

serial number	Standard number	Standard name
1	IEC 60512-6-4:2002	Dynamic stress test
2	IEC 68-2-27	Impact test
3	IEC 61000-4-2	Electromagnetic Compatibility Test & Measurement Technology Electrostatic Discharge Immunity Test
4	IEC 61000-4-3	Electromagnetic Compatibility Test & Measurement Technology RF Electromagnetic Field Radiated Immunity Test
5	IEC 61000-4-4	Electromagnetic Compatibility Test and Measurement Technology Electrical Fast Transient Burst Immunity Test
6	IEC 61000-4-5	Electromagnetic Compatibility Test & Measurement Technology Surge (Shock) Immunity Test
7	IEC 61000-4-6	Electromagnetic Compatibility Test & Measurement Technology RF field-induced immunity to conducted disturbances
8	IEC 61000-4-11	Electromagnetic compatibility test and measurement technology voltage
9	IEC 61000-6-1	Generic standards - Immunity standard for residential, commercial and light-industrial environments
10	IEC 61000-6-2	Common Criteria - Immunity to Industrial Environments
11	IEC 61000-6-3	Generic standards - Emission standard for equipment in residential environments
12	IEC 61000-6-4	General Criteria - Emission standards for industrial environments
13	IEC 60529:2001	Enclosure rating

14	EN 50699	Recurrent Tests of Electrical Equipment
15	CEC-400-2017-002	2016 APPLIANCE EFFICIENCY REGULATIONS

The AC input of the above series of chargers is optional, you can choose the corresponding AC power cord according to the power of the charger and the use area, we provide the following optional models.If the following plugs do not fit for your region, please contact us.

2.10 AC input plug

Power cord model list 1

Model	AC wire diameter	Plug photo
Standard industrial plug 32A	2.5mm*5	
Standard industrial plug 32A	2.5mm*4	
Standard industrial plug 16A	2.5mm*5	
Standard industrial plug 16A	2.5mm*4	

2.11 DC Output connectors

The output of the above series charger is optional, you can choose according to the current output connector of the battery, we provide the following optional models.

Output connection table

Model	Adaptation type	Battery type	Plug photo
OT series	Built	Lead-acid/lithium-ion battery	
REMA160A	External	lithium-ion battery	
REMA320A	External	lithium-ion battery	

3 Safety

3.1 Safety tips for installation

3.1.1 Fire hazard

⚠DANGER

Safety warning for external chargers

- There must be no flammable materials near the charger Included shipping and packaging materials are included:
- There must be no flammable materials within 2.5 m of the charger.
- The horizontal distance between the charger and the combustible material is at least 2.5 m It is forbidden to store flammable materials (e g on shelves) above the charger or to use flammable building materials The distance from areas with a risk of fire, explosion and explosives must be at least 5 m .

⚠DANGER

Built-in charger safety warning

- The charger cannot be installed close to the controller.
- The positive pole of the charger output connection is not allowed to be directly connected to the battery.
- After the charger output is installed, a pipe sheath needs to be installed to protect it from bare metal touching the metal powder.

3.1.2 Water ingress risk

⚠DANGER

There must not be any liquid in the vicinity of the charger.

Do not place any liquid on top of the charger.

3.1.3 Stress risk

⚠DANGER

- Avoid the charger exceeding the stress level and do not place anything on top of the charger.
- Electrical installation according to uniform regulations (wire cross-sections, safety devices, ground

connections)Avoid the input and output stress of the charger exceeding the range, and do not modify any parameters of the cable (including length, wire diameter, voltage carrying range, etc.) without the authorization of the manufacturer.Before electrical installation, please check the parameters on the nameplate (voltage/frequency/current, etc.) and compare them with the performance parameters of the power connector. Prevent the charger from ultra-high stress ranges (voltage, frequency, and current) by connecting the grid safety device in series.

3.1.4 Water ingress risk

⚠DANGER

- Missing or improperly designed leakage protection devices can lead to a risk of electric shock and fire.
- Missing or poorly designed residual current protection devices can cause fatal injuries by causing electric shock or fire in the event of a malfunction necessary, use Type B or B+RCD (Residual Current Device, RCD).
- In order to operate the charger, the location of use must have a grid interface The supply voltage and frequency must match the instructions on the rating plate (see the section "Identification and Labeling on the Charger") As specified, grid interfaces must be properly grounded .
- The charger must be protected from excessive contact voltages according to the regulations of the local power supply unit (EVU) .
- If the power cord of the charger is damaged, it must be replaced by the manufacturer or its customer service department or appropriate qualified personnel to avoid danger.

3.1.5 Installation environmental risks

⚠WARNING

Safety warning for external chargers

- The side distance to the next charger is at least twice the width of the charger If the spacing to the next charger cannot be respected, the chargers need to be staggered.
- Please install the charger in a vertical position, and there are no foreign objects around the fan to prevent the fan from getting foreign objects inside the charger when working Do not allow horizontal installation.
- Maintain a minimum lateral distance of 0,5 m from the next wall.
- Do not install this charger in a commercial environment.
- Fire extinguishing equipment must be prepared around the charger.
- Ensure optimal ventilation of the charger:
- When installing/installing the charger, you should pay attention to:
  - No corrosive gases, e g acid gases,
  - No conductive dust, such as soot or metal dust,
  - No excessive non-conductive dust is deposited,
  - No water should enter the inside of the charger
- Pay attention and comply with the regulations set by the battery manufacturer.
- In addition to the restrictions on the choice of installation site mentioned in this operating instruction national regulations must be observed.

⚠WARNING

Built-in charger safety warning

- Please install the charger in a vertical position, and there are no foreign objects around the fan to prevent the fan from getting foreign objects inside the charger when working Do not allow horizontal installation.
- The charger is not allowed to be installed on a liquid lead-acid battery.
- The charger is not allowed to be installed in the controller accessory, at least at a distance of more than 400mm away from the control.
- After the charger output is installed, a pipe sheath needs to be installed to protect it from bare metal touching the metal powder..

- Ensure optimal ventilation of the charger:
- When installing/installing the charger, you should pay attention to:
  - No corrosive gases, e g acid gases,
  - No conductive dust, such as soot or metal dust,
  - No excessive non-conductive dust is deposited,
  - No water should enter the inside of the charger
- Pay attention and comply with the regulations set by the battery manufacturer.
- In addition to the restrictions on the choice of installation site mentioned in this operating instruction national regulations must be observed.

3.1.6 Appearance warning

⚠WARNING

The charger has an IP 20 degree of protection against Moisture Ingress and is specially designed for indoor use This is identified by the character 5957 in accordance with IEC 60417.	
Please read the operating instructions carefully before use The work of the battery and charger should only be carried out by a professional following instructions The operating instructions must be placed in a prominent location and easily accessible.	
Avoid open flames or open ignition sources near the battery or charger,and do not smoke.	
Make sure there is adequate ventilation in the chargingarea and do not disconnect. Note:Dirty batteries or chargers require personal protective equipment (e.g., protective glasses and gloves).	
If your charger is not working poperly,you will face many dangers Such as electrical hazards due to mains currents or hazards due to Other causes should be repaired immediately by an authorized Professional. note: high-performance lithium-ion batteries generate extremely high short-circuit currents The metal part is always live, so do not place foreign objects or tools on the battery Take care to comply with accident prevention regulations such as DIN EN 62485-3.	
Pay attention to the correct use of the charger as prescribed Otherwise it may lead to greater danger Unprofessiona l or incorrect use will invalidate the product Do not cover the charger in any form during charging In addition, it is necessary to pay attention to the installation instructions	

Used chargers are hazardous waste and require special disposal Do not dispose of this product in household waste In accordance with the European WEEE Directive 2012/19/EU on waste electrical and electronic equipment (which has been transposed into national law) used power tools must be collected separately and recycled in an environmentally friendly manner Be sure to return your used charger to the dealer or get information about your local authorized collection and disposal system

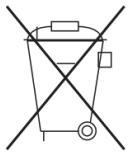

3.2 Use safety reminders

3.2.1 Pre-use safety reminders

⚠DANGER

Safety warning for external chargers

- Check before each use of the charger.
- The space for forklift charging should be kept fully ventilated.
- There is no clogging of the fan and no foreign objects around None of the vents were blocked Within a radius of at least 2,5 m around the forklift that needs to be charged, flammable materials and work equipment that could generate sparks must not be placed.
- There are no flammable, explosive, or combustible materials, chemicals, flammable vapors, and other dangerous items in the vicinity of the charger.
- Ensure that the available space around the battery charger is sufficient to provide adequate ventilation and easy access to the cable socket .
- Make sure the charger is not in the environment where any liquid gets in, and do not pour liquid into the charging case or place it on top of the charger.
- Confirm that nothing has been placed on the output cable and input power cord or place it where you can step on it.
- Confirm that there are no defects, cracks, worn, or exposed copper wires inside the output plug and cable, and that the charging output plug is clean and dry, and that there are no dirt, iron filings and other foreign objects inside, and that the cable is not entangled with any items, and that there are no knots.
- Make sure the input and output cables are not scattered and tangled, people may get entangled or trip over the scattered and surrounded cables.
- Confirm that the input plug and wire are free of defects, cracks, wear, or exposed copper wires inside the cable, and that the charging input plug is clean and dry, and that the metal contacts are free of dirt, iron filings and other foreign objects, and that the metal contacts are in a shiny state.
- Whether the enclosure is intact or not .

⚠DANGER

Built-in charger safety warning

- Check before each use of the charger.
- The space for forklift charging should be kept fully ventilated.
- Ensure that the available space around the battery charger is sufficient to provide adequate ventilation and easy access to the cable socket .
- Make sure the charger is not in the environment where any liquid gets in, and do not pour liquid into the charging case or place it on top of the charger.
- Confirm that nothing has been placed on the output cable and input power cord or place it where you can step on it.
- Confirm that there are no defects, cracks, worn, or exposed copper wires inside the output plug

and cable, and that the charging output plug is clean and dry, and that there are no dirt, iron filings and other foreign objects inside, and that the cable is not entangled with any items, and that there are no knots.

- Make sure the input and output cables are not scattered and tangled, people may get entangled or trip over the scattered and surrounded cables.
- Confirm that the input plug and wire are free of defects, cracks, wear, or exposed copper wires inside the cable, and that the charging input plug is clean and dry, and that the metal contacts are free or dirt, iron filings and other foreign objects, and that the metal contacts are in a shiny state.

3.2.2 Run and operate safety reminders

⚠DANGER

Safety warning for external chargers

- Before connecting the output, make sure that there is no fault information on the charger display Interface.
- Do not connect batteries that cannot be charged.
- Do not connect any commercial batteries.
- Before connecting the battery, make sure that the charger is compatible with the battery of that model.
- It is forbidden to smoke or use an open flame around the battery.
- Make sure that liquid does not flow into the inside of the charger.
- Before connecting the battery, it is essential to check and follow the instructions on the rating. voltage of the allowable battery voltage (see the "Identification and Labeling on the Charger" section) Place the battery in front of or next to the charger so that the battery plug is within the operating distance of the charger's charging cable (standard 2,5 m).
- The relevant safety regulations of the manufacturer of the battery and the charging station must be strictly followed.
- The charger input and output cables can only be connected or unplugged when the charger and forklift are turned off.
- If the charging process is interrupted by unplugging it, there is a risk of personal injury The resulting spark can ignite the charging gas formed during charging, which can cause a fire or explosion.
- For chargers whose charging procedures can be changed subsequently, the operator is obliged to record the applicable battery type on the housing.
- If it is determined that there are safety-related changes, damage, or other defects in the charger or in performance, the charger must not be used until repairs have been carried out in accordance with the regulations.
- If you find any damage, you can immediately feedback with the EP.
- Mark the damaged charger and deactivate it.
- The charger should only be reused after the fault has been identified and troubleshooting.
- Do not unplug the charger input power plug while the charger is working.
- Do not unplug the charger output while the charger is working.
- Do not directly touch the surface of the charger when the charger is working to avoid high temperature burns.

⚠DANGER

Built-in charger safety warning

- It is forbidden to smoke or use an open flame around the battery.
- Make sure that liquid does not flow into the inside of the charger.
- The relevant safety regulations of the manufacturer of the battery and the charging station must be strictly followed.
- If you find any damage, you can immediately feedback with the EP.
- Mark the damaged charger and deactivate it.
- The charger should only be reused after the fault has been identified and troubleshooting.

- Do not unplug the charger input power plug while the charger is working.
- Do not unplug the charger output while the charger is working.
- Do not directly touch the surface of the charger when the charger is working to avoid high temperature burns.

3.2.3 Safety reminder after use

⚠CAUTION

- Prerequisite.
- The charger is fully charged or standby.
- The charger is paused.
- Procedure.
- Turn off the charger air switch.
- Disconnect the charger input.
- Disconnect the charger output.
- When the charging process is over, roll up the charging cable or place it on the cable holder, and when placing the cable, make sure it doesn't get tangled or trip over people.

3.3 Service Safety Reminder

⚠DANGER

Dangerous voltage warning.

- Chargers are electrical devices in which voltage and current can endanger personal safety.
- The charger should only be operated by a trained and authorized professional.
- Before intervening in the charger or working on the charger, the power supply should be disconnected,and, if necessary, the battery should be disconnected.
- The inside of the charger can only be opened and repaired by obtaining EP authorized service The charger must be separated from the power supply and battery before maintenance or repair work begins.
- After 5 minutes of separation from the grid and the battery, the charger's housing can be opened from which the installed capacitors can be unloaded.
- No alterations, modifications and additions to the charger that affect safety are allowed without the manufacturer's permission! This also applies to the installation and setting of safety devices• Special care should be taken not to narrow the spacing and air gaps.
- The spare parts used must meet the technical requirements specified by the manufacturer This is always ensured by the use of original spare part.

3.4 Maintenance safety tips

⚠DANGER

Dangerous voltage warning.

- Chargers are electrical devices in which voltage and current can endanger personal safet The charger should only be operated by a trained and authorized professional.

⚠CAUTION

The wear and tear of the required maintenance parts is highly dependent on the actual operation and conditions of use of the charger. The following must be checked monthly.

- Whether the signal pin inside the output plug-in is firmly linked.
- Clean the dust of the filter screen at the air inlet of the fan, and replace it immediately if it is damaged.
- Use a dry rag to remove any foreign matter from the inside of the plug-in and the signal pin.
- Whether the grid interface is intact.
- Whether the enclosure is intact.
- Whether the insulation of the grid interface cable is intact.
- Whether all bolted joints are fixed or not.

⚠WARNING

- The following safety tests must be performed every 6 months or after the replacement of repair part.

Ground resistance test.

- Insulation resistance test.
- Hipot test.
- Leakage current test.
- Output surge.
- Voltage dip test.
- Leakage protection.
- Protection against electric shock.

4 operation

4.1 Installation

4.1.1 Disassemble the box

⚠WARNING

Wear protective gloves when using any tools.

Use a tool to disassemble the box and Remove the charger from the box.

Schematic diagram of the charger	

4.1.2 Grid safety devices

⚠DANGER

- The following work should only be performed by trained and authorized professionals.
- Do not install the device with electricity.

⚠DANGER

- Missing or improperly designed leakage protection devices can lead to a risk of electric shock and fire.
- Missing or poorly designed residual current protection devices can cause fatal injuries by causing.
- Electric shock or fire in the event of a malfunction.
- necessary, use Type B or B+RCD (Residual Current Device, RCD).
- In order to operate the charger, the location of use must have a grid interface The supply voltage and frequency must match the instructions on the rating plate (see the section "Identification and Labeling on the Charger") As specified, grid interfaces must be properly grounded.
- The charger must be protected from excessive contact voltages according to the regulations of the local power supply unit (EVU).
- If the power cord of the charger is damaged, it must be replaced by the manufacturer or its Customer.
- service department or appropriate qualified personnel to avoid danger.
- Do not install the device with electricity.

Refer to the following table for the safety device of the series power grid

Current rating	Grid safety devices	remark
> 32 to 32 A	35 A gL	A gL fuse can be used Or use a circuit autoprotector with K performance

The output current rate of the charger is detailed on the rating plate

charger		Fuse data[A]
Output current [A]		At an output voltage of 80 V
from	reach	/
0	60	PH:80V 60A

4.1.3 Install the charger

⚠DANGER

Safety warning for external chargers

- There must be no flammable materials near the charger Included shipping and packaging materials are included:
- There must be no flammable materials within 2.5 m of the charger.
- The horizontal distance between the charger and the combustible material is at least 2.5 m It is forbidden to store flammable materials (e g on shelves) above the charger or to use flammable building materials The distance from areas with a risk of fire, explosion and explosives must be at least 5 m .

⚠DANGER

Built-in charger safety warning

- The charger cannot be installed close to the controller.
- The positive pole of the charger output connection is not allowed to be directly connected to the battery.
- After the charger output is installed, a pipe sheath needs to be installed to protect it from bare metal touching the metal powder.

⚠DANGER

There must not be any liquid in the vicinity of the charger.

Do not place any liquid on top of the charger.

⚠DANGER

- Avoid the charger exceeding the stress level and do not place anything on top of the charger.
- Electrical installation according to uniform regulations (wire cross-sections, safety devices, ground connections)Avoid the input and output stress of the charger exceeding the range, and do not modify any parameters of the cable (including length, wire diameter, voltage carrying range, etc.) without the authorization of the manufacturer.Before electrical installation, please check the parameters on the nameplate (voltage/frequency/current, etc.) and compare them with the performance parameters of the power connector. Prevent the charger from ultra-high stress ranges (voltage, frequency, and current) by connecting the grid safety device in series.

⚠DANGER

- Missing or improperly designed leakage protection devices can lead to a risk of electric shock and fire.
- Missing or poorly designed residual current protection devices can cause fatal injuries by causing electric shock or fire in the event of a malfunction necessary, use Type B or B+RCD (Residual Current Device, RCD).
- In order to operate the charger, the location of use must have a grid interface The supply voltage and frequency must match the instructions on the rating plate (see the section "Identification and Labeling on the Charger") As specified, grid interfaces must be properly grounded .
- The charger must be protected from excessive contact voltages according to the regulations of the local power supply unit (EVU) .
- If the power cord of the charger is damaged, it must be replaced by the manufacturer or its customer service department or appropriate qualified personnel to avoid danger.

⚠WARNING

Safety warning for external chargers

- The side distance to the next charger is at least twice the width of the charger If the spacing to the next charger cannot be respected, the chargers need to be staggered.
- Please install the charger in a vertical position, and there are no foreign objects around the fan to prevent the fan from getting foreign objects inside the charger when working Do not allow horizontal installation.
- Maintain a minimum lateral distance of 0,5 m from the next wall.

- Do not install this charger in a commercial environment.
- Fire extinguishing equipment must be prepared around the charger.
- Ensure optimal ventilation of the charger:
- When installing/installing the charger, you should pay attention to:
  - No corrosive gases, e g acid gases,
  - No conductive dust, such as soot or metal dust,
  - No excessive non-conductive dust is deposited,
  - No water should enter the inside of the charger
- Pay attention and comply with the regulations set by the battery manufacturer.
- In addition to the restrictions on the choice of installation site mentioned in this operating instruction national regulations must be observed.

⚠WARNING

Built-in charger safety warning

- Please install the charger in a vertical position, and there are no foreign objects around the fan to prevent the fan from getting foreign objects inside the charger when working Do not allow horizontal installation.
- The charger is not allowed to be installed on a liquid lead-acid battery.
- The charger is not allowed to be installed in the controller accessory, at least at a distance of more than 400mm away from the control.
- After the charger output is installed, a pipe sheath needs to be installed to protect it from bare metal touching the metal powder..
- Ensure optimal ventilation of the charger:
- When installing/installing the charger, you should pay attention to:
  - No corrosive gases, e g acid gases,
  - No conductive dust, such as soot or metal dust,
  - No excessive non-conductive dust is deposited,
  - No water should enter the inside of the charger
- Pay attention and comply with the regulations set by the battery manufacturer.
- In addition to the restrictions on the choice of installation site mentioned in this operating instruction national regulations must be observed.

⚠WARNING

- This series of chargers is suitable for charging industrial lithium batteries Any other use of the equipment is non-compliant and may result in injury, damage to the equipment, or other property Damage.
- The rated operating input voltage range, frequency range, maximum input current, and input power are all specified in detail on the nameplate.
- The rated working output voltage range, current range, and constant power are all specified in detail on the nameplate.
- Used in industrial environments.
- The permissible temperature range is between -10°C and 45°C .
- Relative humidity is 5%~95%.
- The altitude should not exceed 2000 m .
- Input voltage fluctuation range of ±15%.
- Storage temperature: -20 °C~75 °C.
- Storage humidity 5%~95%.

Check whether the charger is internal or external, and select the following installation method according to the charger adaptation type. 1：Built-in charger mode: connect the positive and negative poles of the output and the grounding wire. Connect the input AC power cable. 2：External charger mode：Externally connect the AC power cable, and the charger needs to be placed at a height of 500mm above the ground.	

Note: If you want to replace the cable, please refer to Section 2.6 for the relevant technical parameters.

Note: Charger adaptation AC power cords vary by model, see Section 2.6.

Note: If the environmental conditions exceed the above range, you should contact us in advance to negotiate and solve.

4.2 Operators Daily Checklist

⚠DANGER

Safety warning for external chargers

- The space for forklift charging should be kept fully ventilated.
- There is no clogging of the fan and no foreign objects around None of the vents were blocked Within a radius of at least 2,5 m around the forklift that needs to be charged, flammable materials and work equipment that could generate sparks must not be placed.
- There are no flammable, explosive, or combustible materials, chemicals, flammable vapors, and other dangerous items in the vicinity of the charger.
- Ensure that the available space around the battery charger is sufficient to provide adequate ventilation and easy access to the cable socket .
- Make sure the charger is not in the environment where any liquid gets in, and do not pour liquid into the charging case or place it on top of the charger.
- Confirm that nothing has been placed on the output cable and input power cord or place it where you can step on it.
- Confirm that there are no defects, cracks, worn, or exposed copper wires inside the output plug and cable, and that the charging output plug is clean and dry, and that there are no dirt, iron filings and other foreign objects inside, and that the cable is not entangled with any items, and that there are no knots.
- Make sure the input and output cables are not scattered and tangled, people may get entangled or trip over the scattered and surrounded cables.
- Confirm that the input plug and wire are free of defects, cracks, wear, or exposed copper wires inside the cable, and that the charging input plug is clean and dry, and that the metal contacts are free of dirt, iron filings and other foreign objects, and that the metal contacts are in a shiny state.
- Whether the enclosure is intact or not .

⚠DANGER

Built-in charger safety warning

- Check before each use of the charger.
- The space for forklift charging should be kept fully ventilated.
- Ensure that the available space around the battery charger is sufficient to provide adequate ventilation and easy access to the cable socket .
- Make sure the charger is not in the environment where any liquid gets in, and do not pour liquid into the charging case or place it on top of the charger.
- Confirm that nothing has been placed on the output cable and input power cord or place it where you can step on it.
- Confirm that there are no defects, cracks, worn, or exposed copper wires inside the output plug and cable, and that the charging output plug is clean and dry, and that there are no dirt, iron filings and other foreign objects inside, and that the cable is not entangled with any items, and that there are no knots.
- Make sure the input and output cables are not scattered and tangled, people may get entangled or trip over the scattered and surrounded cables.
- Confirm that the input plug and wire are free of defects, cracks, wear, or exposed copper wires inside the cable, and that the charging input plug is clean and dry, and that the metal contacts are free or dirt, iron filings and other foreign objects, and that the metal contacts are in a shiny state.

⚠WARNING

Never start the charger until any damage or malfunction of the charger has been resolved.

4.3 Run the charger

⚠DANGER

Safety warning for external chargers

- Do not connect batteries that cannot be charged.
- Do not connect any commercial batteries.
- Before connecting the battery, make sure that the charger is compatible with the battery of that model.
- It is forbidden to smoke or use an open flame around the battery.
- Make sure that liquid does not flow into the inside of the charger.
- Before connecting the battery, it is essential to check and follow the instructions on the rating. voltage of the allowable battery voltage (see the "Identification and Labeling on the Charger" section) Place the battery in front of or next to the charger so that the battery plug is within the operating distance of the charger's charging cable (standard 2,5 m).
- The relevant safety regulations of the manufacturer of the battery and the charging station must be strictly followed.
- The charger input and output cables can only be connected or unplugged when the charger and forklift are turned off.
- If the charging process is interrupted by unplugging it, there is a risk of personal injury The resulting spark can ignite the charging gas formed during charging, which can cause a fire or explosion.
- For chargers whose charging procedures can be changed subsequently, the operator is obliged to record the applicable battery type on the housing.
- If it is determined that there are safety-related changes, damage, or other defects in the charger or in performance, the charger must not be used until repairs have been carried out in accordance with the regulations.
- If you find any damage, you can immediately feedback with the EP.
- Mark the damaged charger and deactivate it.
- The charger should only be reused after the fault has been identified and troubleshooting.
- Do not unplug the charger input power plug while the charger is working.
- Do not unplug the charger output while the charger is working.
- Do not directly touch the surface of the charger when the charger is working to avoid high

temperature burns.

⚠DANGER

Built-in charger safety warning

- It is forbidden to smoke or use an open flame around the battery.
- Make sure that liquid does not flow into the inside of the charger.
- The relevant safety regulations of the manufacturer of the battery and the charging station must be strictly followed.
- If you find any damage, you can immediately feedback with the EP.
- Mark the damaged charger and deactivate it.
- The charger should only be reused after the fault has been identified and troubleshooting.
- Do not unplug the charger input power plug while the charger is working.
- Do not unplug the charger output while the charger is working.
- Do not directly touch the surface of the charger when the charger is working to avoid high temperature burns.

⚠WARNING

Wipe off any water stains on your hands to avoid electric shock

Connect the charger AC input to the power grid.	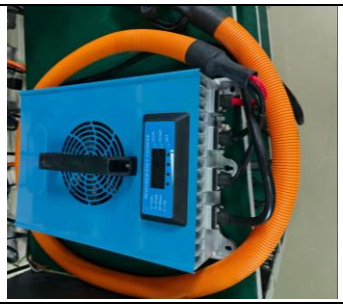
Using the charger output connector, connect the battery.	
Schematic diagram of the completion of the connection	

Note: The plug needs to be securely connected at a height of 1 meter from the ground.

4.4 Working status

⚠WARNING

- Do not unplug the charger input power plug while the charger is working.
- Do not unplug the charger output while the charger is working.
- Do not directly touch the surface of the charger when the charger is working to avoid high temperature burns.

Light Strip Color	Charger State	Photo
RED LIGHTING ON	Charging	
GREEN LIGHTING ON	Fully Charged	
YELLOW FLASHING	Charger Fault	
YELLOW LIGHTING ON	Bettery Fault	

4.5 Running curves

The charger will output the corresponding voltage and current according to the lithium battery CAN message, the above curve is only test data, it does not mean that the charger will be charged according to this curve.	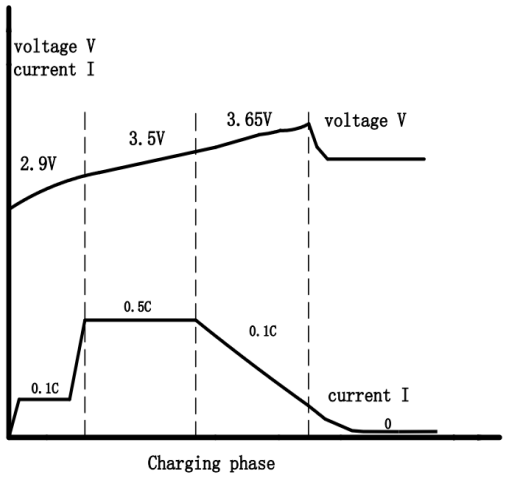

Note: In the curve, V represents the voltage of the monomer, 24V monomer = 8 strings, 48Vmonomer =15 strings, 80V monomer = 24 strings. The calculated curve voltage should = number of cells * cell Voltage.

Note: In the curve, C is equal to the actual capacity of the battery. In the calculation, the current Operating current should = the actual capacity of the battery * the current execution multiple, For example, the 80V400AH battery needs to be charged, according to the above graph, the working logic of the charger should be that when the voltage is lower than 69.6V, the charger will output 40Acurrent. When the battery voltage is greater than 69.6V and lower than 84V, the charger will output 200A current. When the battery voltage is greater than 84V and lower than 87.6V, the charger will output 40A current and maintain it until the battery is fully charged.

Note: The charger does not provide lead-acid battery curve query, please refer to the lead-acid battery manual.

4.6 Once the operation is complete

Disconnect the charger input.

Disconnect the charger output.

When the charging process is over, roll up the charging cable or place it on the cable holder, and when placing the cable, make sure it doesn't get tangled or trip over people.

Use the charger that was placed after completion	

5 Description of the fault

5.1 Lead battery fault table

Fault Code	Item	Description
1	Abnormal charging machine	Input AC power failure, internal temperature failure, and issues with one end of the charger causing charging to not continue
2	Battery abnormality	Charging failure caused by improper battery connection

Lithium battery fault table

Fault Code	Item	Description
1	Abnormal charging machine	Input AC power failure, internal temperature failure, communication failure, and issues with one end of the charger causing charging to not continue
2	Battery abnormality	Charging failure caused by improper battery connection
3	Non-load	The charger failed to detect the battery, CAN communication anomaly, The charger is on standby.

5.2 Simple breakdown repairs

5.2.1 Fault 1: Abnormal charging machine

BMS (Battery Management System) faults , please refer to the battery manual

⚠DANGER

- The following faults need to be carried out by a professional electrician.
- Before intervening with the charger, disconnect the charger input and output.
- Do not touch the metal surface on the outside of the charger to avoid high temperature burns.

AC Input Overvoltage/Undervoltage：
yellow led flashing
Solution:When the input voltage exceeds the set value of the charger, the charger will automatically enter a protective state and stop running. After eliminating the abnormal AC power, the charger will automatically restart
Check if the input voltage is less than the working voltage of the charger. If it is less than this value, eliminate the AC fault and recharge the charger

Output Overvoltage/Undervoltage：
yellow led flashing
Solution:When the battery voltage is greater than the maximum value detected internally by the charger or less than the minimum value detected internally, the charger cannot charge the battery normally. At this time, stop charging the battery with too high an overvoltage. For the battery with too low a voltage, replenish it to the normal voltage and then charge it with the charger.

Over temperature protection： yellow led flashing Solution: The internal temperature of the charger is too high due to excessive external temperature, damaged charger fan, or the charger is in a closed and confined space. Place the charging area in a ventilated environment, and the charger will take care of the skin after the internal temperature drops. If the fan of the charger fails, it is recommended to return to the factory for repair.	
Internal fault of charger： yellow led flashing Solution: After troubleshooting input, output, temperature and other faults, the charger does not start normally, and the charger will stand for 2 hours. Re-connect to the AC power, but the charger still does not start. It is recommended to return to the factory for maintenance.	

5.2.2 Fault 2:Battery abnormality

⚠DANGER

- The following faults need to be carried out by a professional electrician
- Before intervening with the charger, disconnect the charger input and output
- Do not touch the metal surface on the outside of the charger to avoid high temperature burns

Battery abnormality： yellow lighting on Solution: please refer to the battery manual	

5.2.3 Fault 3: Non-load

⚠DANGER

- Before intervening with the charger, disconnect the charger input and output.
- Do not touch the metal surface on the outside of the charger to avoid high temperature burns.
- When detecting the output voltage, voltage, and current, do not touch any of the metal contacts of the connector with your hands.

Communication failure: yellow led flashing Solution: Check whether the CAN-H and CAN-L have faults such as reverse connection and poor contact. After the inspection, they still cannot be charged normally. Check whether the charging protocol matches and whether the baud rate matches.	

5.3 Service support

Most of the above situations can be resolved with simple troubleshooting. If it is determined that the issue does not fall into the above category, it may indicate that the charger's hardware is damaged. Customers who meet the after-sales service conditions are kindly requested to contact EP in time for hardware replacement.

If you are unable to identify the problem, need to replace the hardware, or need to change the software, please contact your local distributor. In this case, remote video communication may be required.

When contacting the EP, please provide a detailed description of the problem. For charger fault repairs, please provide charger nameplate information, battery information, and capture CAN communication information during charging if necessary to identify specific problem

6 Waste disposal

NOTE

Chargers should be collected separately from household or commercial waste and properly recycled or disposed of Take the old charger (if any) in-house for disposal and hand it over to a professional company (professional waste disposal company) In principle, it is also possible to return the old charger to the manufacturer. To do so, please contact the manufacturer's customer service department. Specific protocols must be adhered to.

According to the European WEEE Directive (2012/19/EU), electrical and electronic equipment must be collected, recycled or professionally disposed of separately from unsorted municipal waste, where pollutants resulting from improper disposal can cause lasting damage to health and the environment.

Detailed information can be obtained at the Waste Disposal Specialist Plant or the relevant authority The packaging of the charger should be disposed of separately. Paper, cardboard and plastic are recycled.

Let's grow together

80V-100A

Lithium battery charger From First Power Technology

Operation Manual

(en-GB)

Foreword

By carefully reading the operating instructions, the user can acquire the necessary technical knowledge to safely operate the charger. The operating instructions contain concise and well organized information sections are arranged alphabetically, and page numbers are numbered.

The company will continue to develop chargers therefore, Manufacturing company must reserve the right to modify the appearance, equipment, and technology. For these reasons, no claims for any device-specific performance may be derived from the contents of these operating instructions.

Safety notices and text mark-ups

Safety instructions and important explanations are indicated by the following graphics:

⚠DANGER

Means that failure to comply can cause risk to life and/or major damage to property.

⚠WARNING

Please strictly adhere to these safety instructions to avoid personal injury or major damage to equipment.

⚠CAUTION

Please pay attention to the important safety instructions.

NOTE

Pay attention to Instruction.

ALL RIGHTS RESERVED

2024.07 01st EDITION

Content

Foreword 1
1 General 2
1.1 Introduction 2
1.2 Important safety tips 3
1.3 Permissable operating conditions 4
1.4 Intended use 4
1.5 Impermissible use 4
1.6 Definition of the person who is used 5
1.6.1 Operator 5
1.6.2 Users 5
1.6.3 Specialist 5
1.6.4 User right,duties and rules of behaviour 5
1.6.5 Operator Rights, Duties and Code of Conduct 5
2 Charger description 6
2.1 Charger appearance 6
2.2 Feature description 6
2.3 Description of how it works 6
2.3.1 Design Principles 6
2.3.2 How it works 7
2.4 Charger parts information 8
2.4.1 AC400V series 8
2.4.2 AC220V series 10
2.4.3 AC600V series 12
2.4.4 AC480V series 14
2.5 Outline drawings 16
2.5.1 AC400V series 16
2.5.2 AC220V series 17
2.5.3 AC600V series 18
2.5.4 AC480V series 19
2.6 Technical data sheets 20
2.6.1 400 Series Charger Technical Parameters 20
2.6.1.1 Charger appearance parameter table 20
2.6.1.2 Electrical performance parameter table 20
2.6.1.3 Electrical function parameter table 21
2.6.1.4 Work environment support 21
2.6.1.5 Safety performance 21
2.6.2 220 Series Charger Technical Parameters 22
2.6.2.1 Charger appearance parameter table 22
2.6.2.2 Electrical performance parameter table 22
2.6.2.3 Electrical function parameter table 23

2.6.2.4 Work environment support....23

2.6.2.5 Safety performance....23
2.6.3 480 Series Charger Technical Parameters....24
2.6.3.1 Charger appearance parameter table....24
2.6.3.2 Electrical performance parameter table....24
2.6.3.3 Electrical function parameter table....25
2.6.3.4 Work environment support....25
2.6.3.5 Safety performance....25
2.6.4 600 Series Charger Technical Parameters....26
2.6.4.1 Charger appearance parameter table....26
2.6.4.2 Electrical performance parameter table....26
2.6.4.3 Electrical function parameter table....27
2.6.4.4 Work environment support....27
2.6.4.5 Safety performance....27
2.7 Model description....28
2.8 Nameplates and logotype....28
2.9 Enforce the standard....29
3 Safety....30
3.1 Safety tips for installation....30
3.1.1 Fire hazard....30
3.1.2 Water ingress risk....30
3.1.3 Stress risk....30
3.1.4 Water ingress risk....30
3.1.5 Installation environmental risks....31
3.1.6 Appearance warning....32
3.2 Use safety reminders....32
3.2.1 Pre-use safety reminders....33
3.2.2 Run and operate safety reminders....34
3.2.3 Safety reminder after use....34
3.3 Service Safety Reminder....35
3.4 Maintenance safety tips....35
4 operation....36
4.1 Installation....36
4.1.1 Disassemble the box....36
4.1.2 Install an industrial plug or socket....37
4.1.3 Installation of industrial sockets....38
4.1.4 Grid safety devices....39
4.1.5 Install the charger....40
4.2 Operators Daily Checklist....42
4.3 Start the charger....42
4.4 Working status....45

4.5 Running curves....46
4.6 Once the operation is complete....47

4.7 Accessibility....48
4.7.1 The main interface of the charger....48
4.7.2 Battery information inquiry....49
4.7.3 Functional interface....49
4.7.4 Parameter settings....50
4.7.5 Charging record interface....51
4.7.6 Charger information inquiry....52
4.7.7 Warning information query....53
4.7.8 Timed charging function....54
4.7.9 Historical data query....55
5 Description of the fault....56
5.1 Fault table....56
5.2 Simple breakdown repairs....57
5.2.1 BMS series failure....57
5.2.2 Fault 10&11: AC Input Overvoltage....59
5.2.3 Fault 12 AC input phase loss....59
5.2.4 Fault 13&14: Output Overvoltage & Output Overcurrent....60
5.2.5 Fault 15: Output short circuit....60
5.2.6 Fault 16: Battery reverse connection fault....61
5.2.7 Fault 17: Over-temperature of Charger....61
5.2.8 Fault 18: hardware failure....62
5.2.9 Fault 19: Fans Failure....62
5.2.10 Fault 20: Fans Failure....63
5.2.11 Fault 21: Other Hardware Failure....63
5.3 Service support....64
6 Waste disposal....64

1 General

1.1 Introduction

This operating instruction helps the model to use 6 models of chargers at 400V as a reference object to achieve safe operation of charger specifications. Its chargers at 220V, 480V, and 600V still work with
this manual. A 400V type charger is called a charger.

This manual must be readily available and kept in a prepared place This manual is intended for use by all persons who have access to the operating process of the charger, including transportation, installation and installation, operation, maintenance, and disassembly.

In commercial use, in addition to the operating instructions, the relevant guidelines, regulations, and laws in force in the place of use or the country of use should be followed to ensure safe and standardized operations.
Information other than this operating manual is provided by a professional on the part of the local distributor or supplier.

All materials are protected by copyright Without express authorization, it is forbidden to retransmit and reproduce the material and its excerpts, to quote and disseminate its contents.

Obligations and Responsibilities of the User of the Equipment: In this Manual, the term "User" refers to any natural or legal person who directly uses or appoints another person to use the Equipment In special cases such as rental, sale or rental, "Equipment User" represents a party that has specific operational obligations under the terms of the contract concluded between the Owner of the Equipment and the User.

In addition, the user of the equipment must strictly comply with the provisions for the prevention of accidents, other safety technical regulations, and guidelines for the use, maintenance and repair of the equipment The user must ensure that all operators carefully read and fully understand the contents of this manual.

The Company shall not be liable for any damages arising from the improper operation of the equipment by the customer or the user of the equipment or a third party without the permission of the Company's customer service department.

If additional equipment needs to be installed or added, and if it affects or complements the functionality of the equipment, prior written consent must be obtained from the local distributor and, depending on the actual situation, approval from the relevant certification body may also be required.

1.2 Important safety tips

The charger is produced in accordance with EU directives and state-of-the-art technology and provides additional safety tips to ensure the absolute safety of personnel.

⚠DANGER

• The following conditions can result in serious personal and property damage：
• Improper use or incorrect operation.
• Turn on the charger without permission.
• Installation errors or improper maintenance and repairs .
• Replace the input and output wires without permission.
• Charge the damaged battery.

⚠DANGER

Attention must be paid to and all instructions contained in this operating instruction regarding proper use, residual risks, installation, operation, and maintenance.

⚠DANGER

Charging a battery that is not suitable for this charger will cause damage to the charger and battery The battery will swell or burst:
• It can only charge the lithium battery lithium battery for local distributor brand electric industrial forklifts.

⚠WARNING

Dangerous voltage warning
Chargers are electrical devices in which voltage and current can endanger personal safety:
• The charger should only be operated by a trained and authorized professional.
• Before intervening in the charger or working on the charger, the power supply should be disconnected and if necessary, the battery should be disconnected.
• The charger can only be opened and repaired by local distributor Customer Service.

⚠WARNING

Damage or other defects in the charger can lead to accidents
If it is determined that there are safety-related changes, damage, or other defects in the charger or in performance, the charger must not be used until repairs have been carried out in accordance with the Regulations:
• Identified deficiencies must be reported to the local distributor immediately.
• Mark the damaged charger and deactivate it.
• The charger should only be reused after the fault has been identified and troubleshooting.

⚠CAUTION

This charger is not suitable for use by:Persons (including children) with impairments in physical, sensory, or mental abilities, or lack of electrical experience and knowledge system and battery charging unless someone supervises or instructs them in using the charger Be responsible for their safety Children should be supervised to ensure they are not playing with the charge

1.3 Permissable operating conditions

This series of chargers is suitable for charging industrial lithium batteries Any other use of the equipment is non-compliant and may result in injury, damage to the equipment, or other property damage:

- The rated operating input voltage range, frequency range, maximum input current, and input power are all specified in detail on the nameplate .
- The rated working output voltage range, current range, and constant power are all specified in detail on the nameplate.
- Used in industrial environments .
- The permissible temperature range is between -10°C and 45°C .
- Relative humidity is 5%~95%.
- The altitude should not exceed 2000 m .
- Input voltage fluctuation range of ±15% .
- Storage temperature: -20 °C~75 °C.
- Storage humidity 5%~95%.

Note: When the environmental conditions exceed the above range, you should contact us in advance to negotiate and solve.

1.4 Intended use

- Damage and other defects to the charger or accessories must be reported to the supervisor immediately. Chargers and accessories that are not safe to operate should not be used until they have been properly serviced.
- Safety installations and switches may not be removed or rendered unusable. Specified settings may only be changed with the approval of the local distributor.
- The charger must not use more than the limit set by the local distributor, and the fluctuation range
  must not exceed ±15%.
- Warning signs need to be added to the charger working area.
- In order to maintain LVD compliance with EMC, any replacement of exterior parts requires prior contact with the local distributor.
- When using the utility grid, the regulations must be followed, as well as country-specific restrictions for winter.

1.5 Impermissible use

- If the charger is used in a way that is not permitted, the user, not the local distributor, is responsible. The following list is for informational purposes only and is not intended to be exhaustive:
- Charge commercial batteries.
- Charge non-local distributor brand batteries.
- Modify or destroy safety devices.
- Modification or replacement of unauthorized parts.
- Extend or shorten the AC/DC end cable.
- The usage environment is beyond the scope of Section 1.3.
- Personnel have not undergone safety training or have not consulted the instructions for operation.

1.6 Definition of the person who is used

1.6.1 Operator

The charger should only be operated by a person who is at least 18 years of age, has been trained in electrical safety and operational safety, and who demonstrates their basic electrical skills to the user or an authorized representative. It is also necessary to have a specific understanding of the working logic of the charger to be used.

1.6.2 Users

The user is the natural person or legal entity responsible for pumping the charger. Users can operate the charger themselves or delegate the task of operating the charger to someone else, such as an operator. In the case of specific cases such as rentals, the liability is borne by the user in accordance with a valid contract between the owner of the car and the operator of the charger.

1.6.3 Specialist

A qualified person is defined as a service engineer or a person who meets the following requirements:

- Full professional qualifications that demonstrate their expertise. The certificate should include a professional qualification or similar document.
- Professional experience shows that the qualified person has gained hands-on experience with the charger during their career During this time, the person has become familiar with the various symptoms that need to be examined, such as based on the results of hazard assessments or routine inspections.
- Recent professional involvement in the field of relevant charger testing or R&D and appropriate further qualification is essential. Qualified personnel must have experience in conducting relevant tests or conducting similar tests.
- In addition, the person must be aware of the latest technological developments and the risks being assessed for the charger to be made.

1.6.4 User right,duties and rules of behaviour

Everyone operating the charger has read and understood this manual and has been approved with the relevant charger operator training. Operate the charger in a safe manner so as not to endanger the life and health of the operator and/or others. Follow all warnings and instructions in this manual This manual is available for use by the operator.

1.6.5 Operator Rights, Duties and Code of Conduct

For the purposes of these operating instructions, the operating company is defined as any natural or legal person who uses the charger on its own or on its behalf. In exceptional cases (e.g. lease or rental).

The operating company is considered to be a person who performs specific operational duties under an existing contractual agreement between the charger owner and the operator.

The operating company must ensure that the charger is used only for its intended purpose and to prevent danger to the health and safety of the operator and third parties. In addition, accident prevention regulations, safety regulations, and operation, maintenance, and repair guidelines must be complied with. The operating company must ensure that all operators have read and understood these operating instructions

2 Charger description

2.1 Charger appearance

2.2 Feature description

The stationary-type charger, characterized by its small size and high conversion efficiency, is equipped with a smart touch screen. Users can set voltage and current on the screen, view charging records, make charging reservations, and switch between different languages. It also features power-off compensation and fault indication lights, making the charging status clear at a glance. The charger adopts forced air cooling for cooling, with functions including input overvoltage, undervoltage protection, output overvoltage, undervoltage, overcurrent, output short circuit, and fan failure protection etc.

2.3 Description of how it works

2.3.1 Design Principles

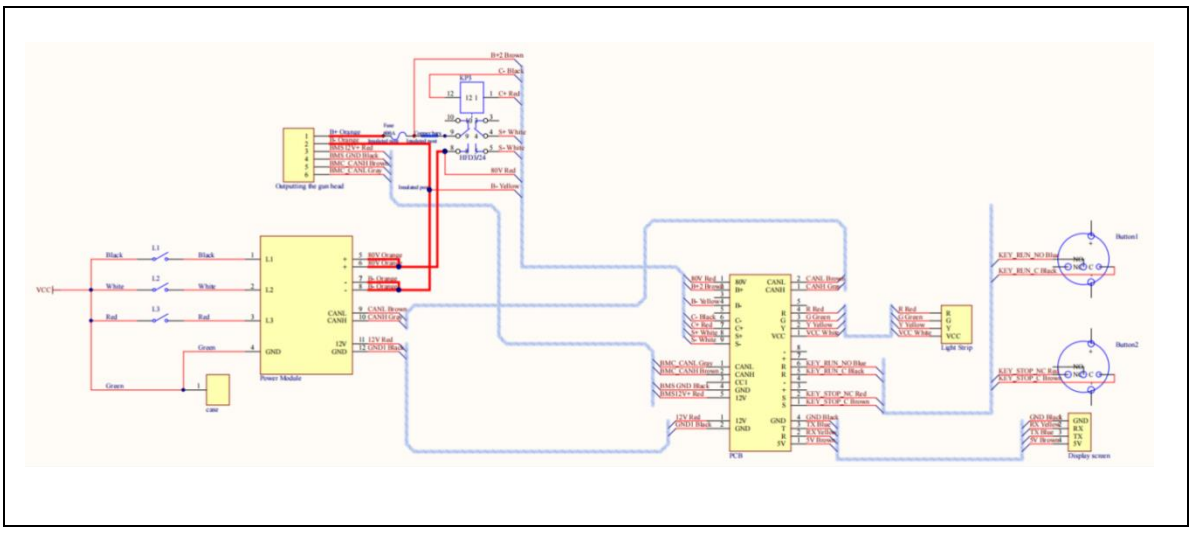

2.3.2 How it works

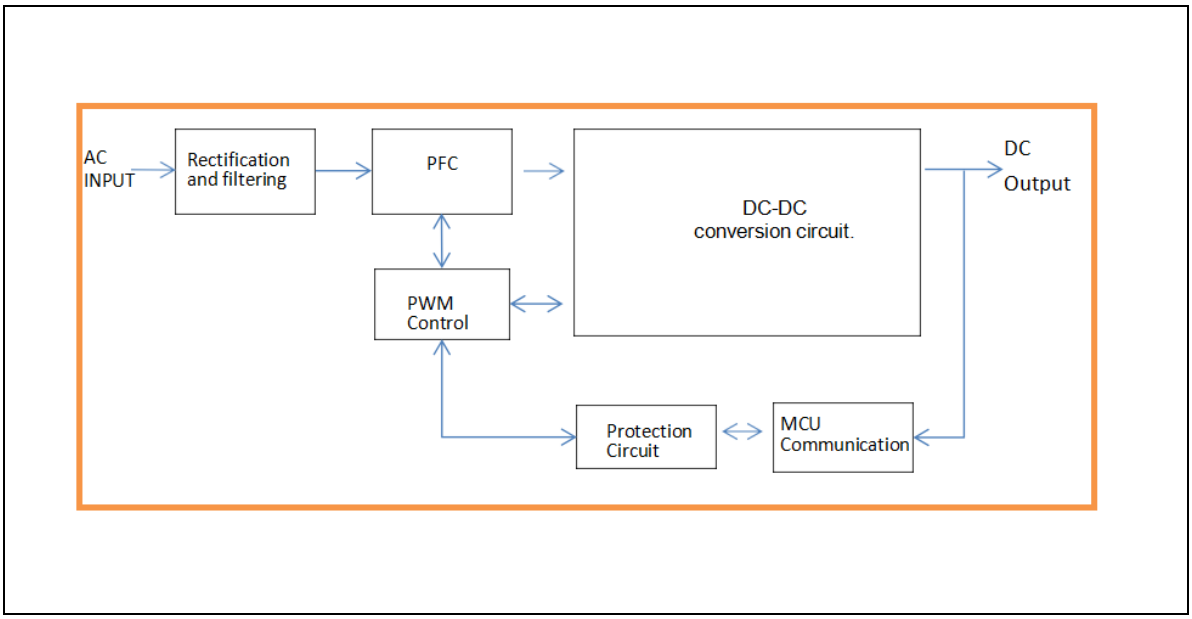

The implementation principle of the high-frequency PFC (Power Factor Correction) module charger generally follows these steps:

Input current rectification: Firstly, the AC input power is rectified into a DC power source.
High-frequency conversion: The DC power source is converted into a high-frequency AC power source, typically achieved through high-frequency switching power supplies using devices such as MOSFETs.
PFC control: The PFC controller monitors the input current and voltage and controls the high-frequency switch to minimize the phase difference between the input current and voltage, thereby maximizing the power factor.

DC-DC conversion: The power source, after power factor correction, enters a DC-DC converter to convert the high-frequency AC power into the desired DC voltage. This typically involves an inductor, a capacitor, a switching element (such as a MOSFET), and control circuitry.

Control and protection: The charger also includes control and protection circuits to ensure that the output voltage and current are within safe ranges and to monitor various conditions during the charging process, such as overvoltage, overcurrent, overtemperature, etc., and take appropriate measures to protect the charger and battery.

Note: The above instructions apply to all chargers under the 220, 400, 480, and 600 models Technical parameters.

2.4 Charger parts information

2.4.1 AC400V series

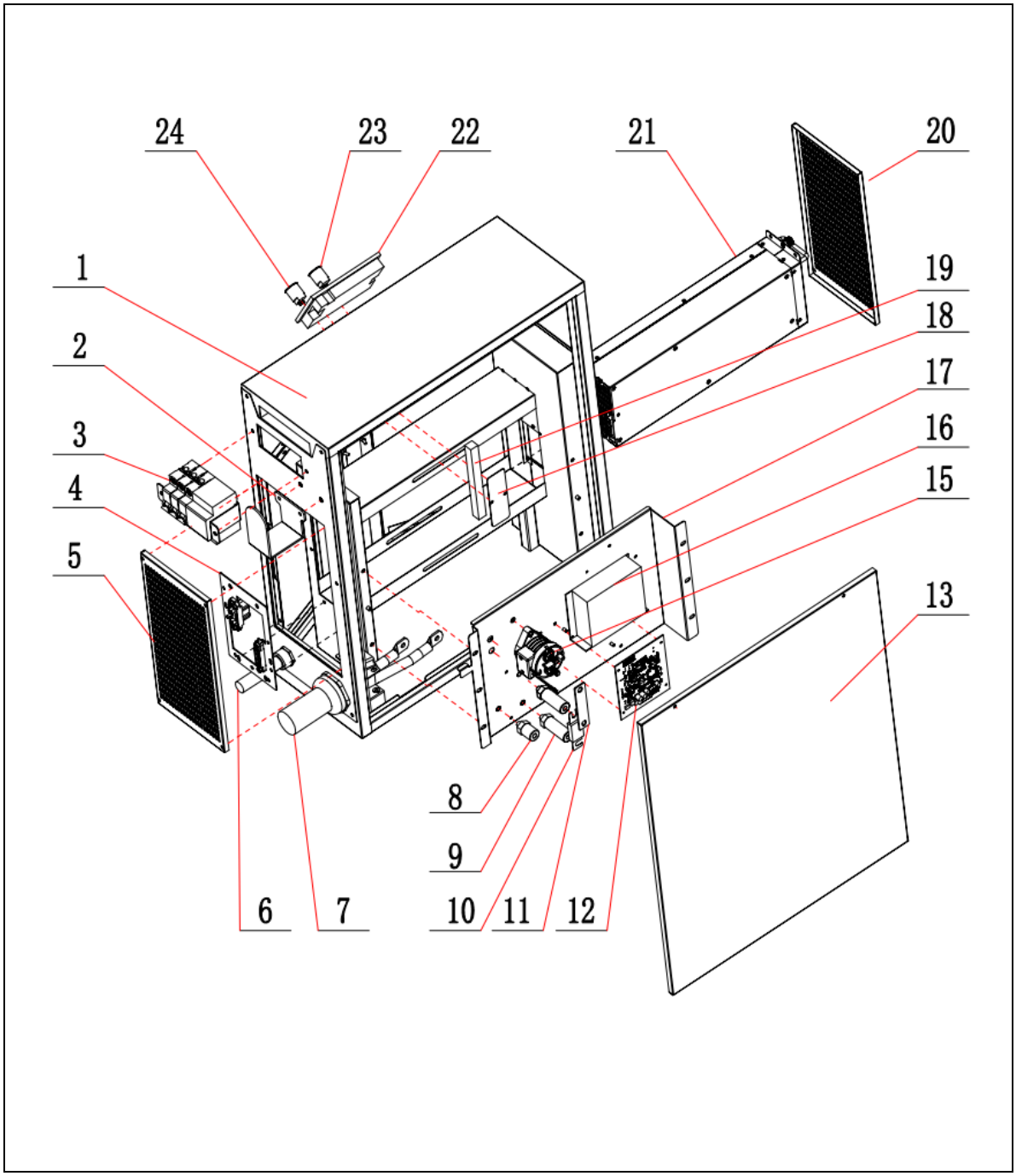

Applicable Models	FST-Li-80V100A-400

No.	NAME	DRAWING NO./SPECIFICATION	QTY
1	BZ-06 Case	FST-BZ-06	1
2	Hook	FST-LI2-06	1
3	Breaker	CHNT	1
4	Rear Adapter Plate		1
5	Left Side Plate		1
6	Input Cable		1
7	Output Cable（Option one）	REMA320A	1
8	Black Insulating Column	30mm with M8 Stud length 9mm	1
9	Red Insulating Column	55mm with M8 Stud length10mm	2
10	Fuse	600A	1
11	Copper Strip((nickel plated)	Hole pitch 72, hole φ8	1
12	PCB		1
13	Back Plate	FST-LI2-05	1
15	DC Relay	ZXEV01-200F-A	1
16	Switching Power Supply	380V to 12V5A ((Partial model charger have it))	1
17	Mount Plate	FST-LI2-08	1
18	Light strip pressure plate	FST-LI2-09	1
19	LED Light Strip	15cm	1
20	Right Side Plate		1
21	Power Module（Option one）	80V100A 100-10000 Module	1
22	HMI	TJC4827X343-011R-Y-Z03	1
23	Start Button	12-24VG without cable	1
24	Stop Button	12-24VG without cable	1

2.4.2 AC220V series

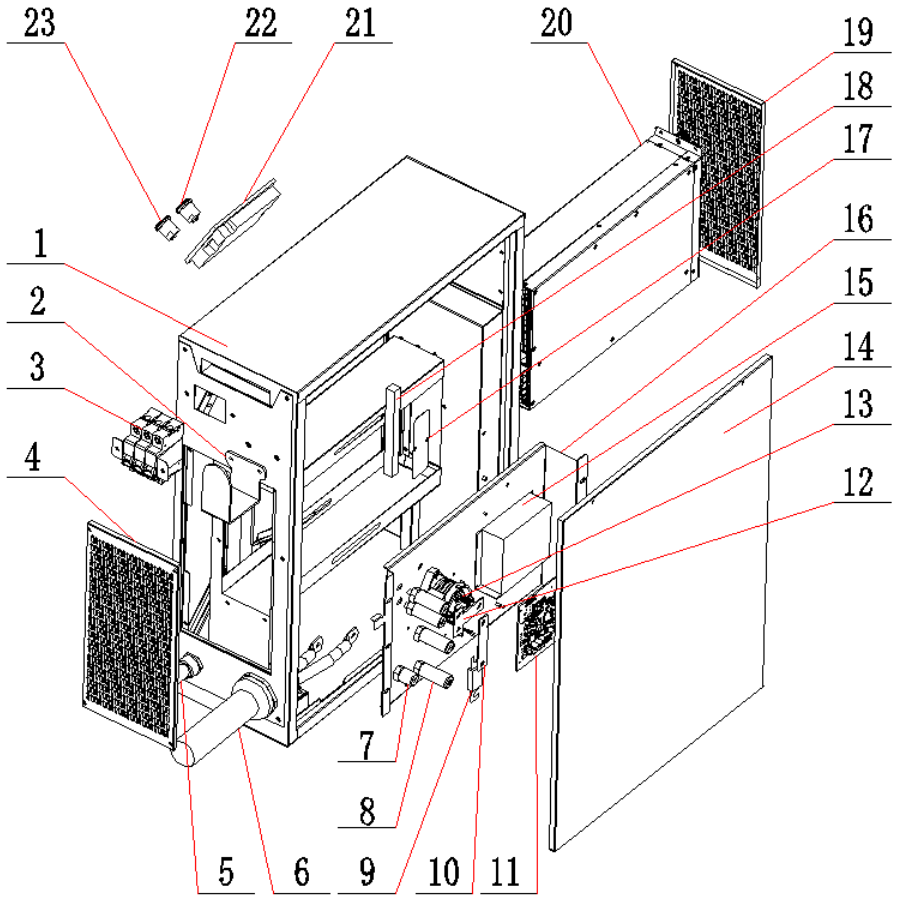

Applicable Models	FST-Li-80V100A-220V3P

No.	NAME	DRAWING NO./SPECIFICATION	QTY
1	BZ-02 Case	FST-BZ-02	1
2	Hook	FST-LI2-06	1
3	Breaker	CHNT	1
4	Left Side Plate		1
5	Input Cable		1
6	Output Cable（Option one）	REMA320A	1
7	Black Insulating Column	30mm withM8 Stud length 9mm	1
8	Red Insulating Column	55mm withM8 Stud length10mm	1
9	Fuse	600A UL	2
10	Copper Strip((nickel plated)	Hole pitch 72, hole φ8	1
11	PCB		1
12	20KW Copper Strip	2mm thickness	1
13	Relay	ZXEV01-200F-A	1
14	Back Plate	FST-LI2-05	1
15	Switching Power Supply	220V to 12V	1
16	Mount Plate	FST-LI2-08	1
17	Light strip pressure plate	FST-LI2-09	1
18	LED Light Strip	15cm	1
19	Right Side Plate		1
20	Power Module（Option one）	100-11000 (80V100A 80V150A)	1
21	HMI	TJC4827X343-011R-Y-Z03	1
22	Start Button	12-24VG without cable	1

2.4.3 AC600V series

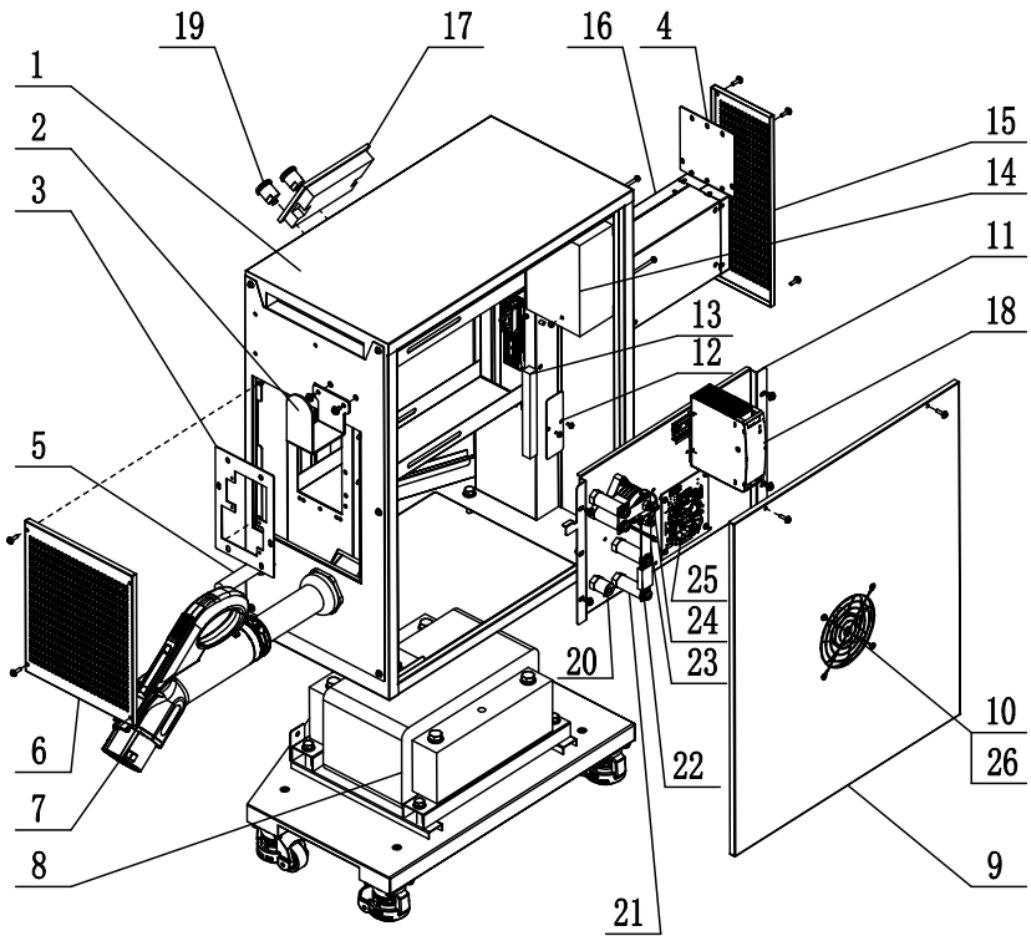

Applicable Models	FST-Li-80V100A-600

No.	NAME	DRAWING NO./SPECIFICATION	QTY
1	BYQ Case	BYQ-BYQ	1
2	Hook	FST-LI2-06	1
3	BZ-Power Module Rear Adapter Plate		1
4	BZ-Power Module Front Adapter Plate		1
5	SR342.5T.3.M Input Cable-B		1
6	Left Side Plate		1
7	Output Cable (Option one)	REMA320A	1
8	Three-phase Auto-transformer		1
9	Back Plate	With fan hole	2
10	Fan Grille	120*120	1
11	Mounting Plate		1
12	Light Strip Pressure Plate	FST-LI2-09	1
13	LED Light Strip	15CM	1
14	Breaker	Schneider	1
15	Right Side Plate (with filter)		1
16	Power Module	80V100A 100-10000 Module	1
17	HMI	TJC4827X343-011R-Y-Z03，Frosted	1
18	Rail Power Supply	Partial model charger have it	1
19	Round Switch	12-24VG(without cable)	1
20	Black Insulating Column	30mm with M8 stud length 9mm	1
21	Red Insulating Column	55mm with M8 stud 10mm long	1
22	Fuse	600A UL certified	1
23	Copper Strip	Hole pitch 72, hole ø8	1
24	DC Relay	ZXEV01-200F-A	1
25	PCB		1
26	Fan DC12V	120*120*25mm	1

2.4.4 AC480V series

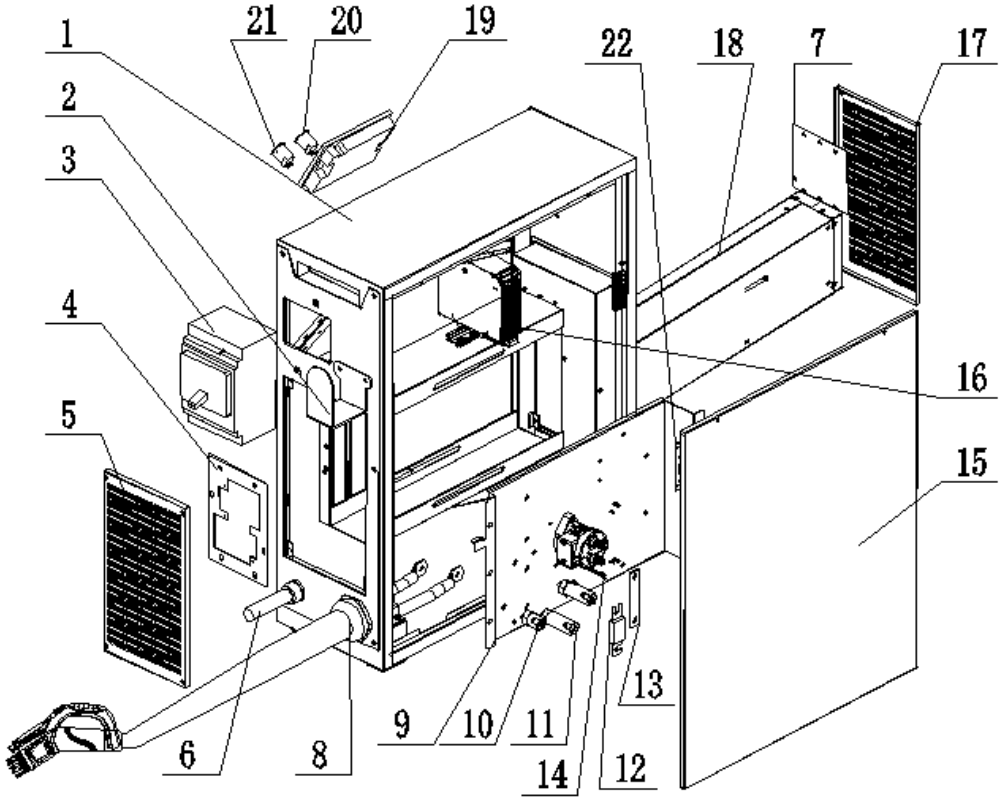

Applicable Models	FST-Li-80V100A-480

No.	NAME	DRAWING NO./SPECIFICATION	QTY
1	Case	Standard	1
2	Hook	FST-LI2-06	1
3	Breaker	Nader	1
4	Connector Mount Plate A		1
5	Left Side Plate		1
6	Input Cable		1
7	Connector Mount Plate B		1
8	Output Cable（Option one）	REMA320A	1
9	Mount Plate		2
10	Black Insulating Column	30mmwithM8 Stud length10mm	1
11	Red Insulating Column	55mmwithM8 Stud length10mm	1
12	Fuse	600A UL Certification	1
13	Copper Strip	Hole pitch 72, hole φ8	1
14	DC Relay	ZXEV01-200F-A	1
15	Back Plate		1
16	Rail Power Supply	Partial model charger have it	1
17	Right Side Plate		1
18	Power Module（Option one）	80V100A 100-10000 Module	1
19	HMI	TJC4827X343-011R-Y-Z03，Frosted	1
20	Start Button	12-24VG without cable	1
21	Stop Button	12-24VG without cable	1

2.5 Outline drawings

2.5.1 AC400V series

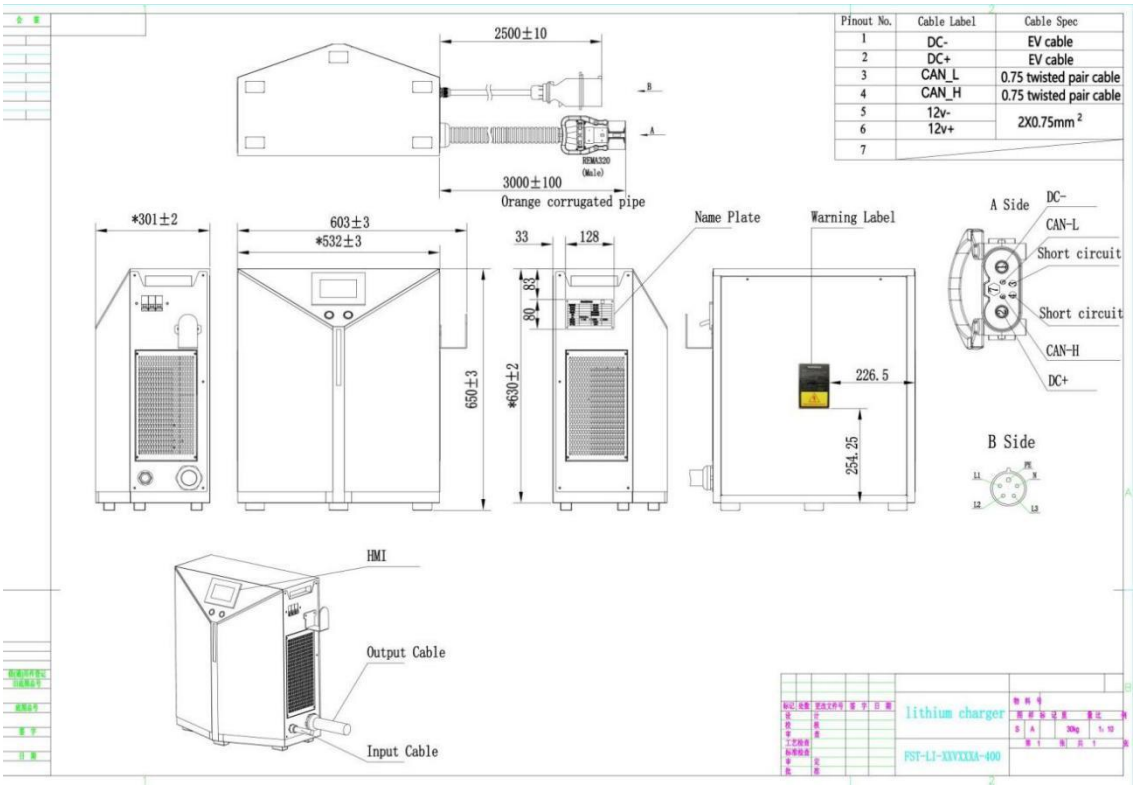

Applicable Models	FST-Li-80V100A-480

NOTE: ALL STANDARD SIZESNOTE: ALL STANDARD SIZES ARE IN MM

2.5.2 AC220V series

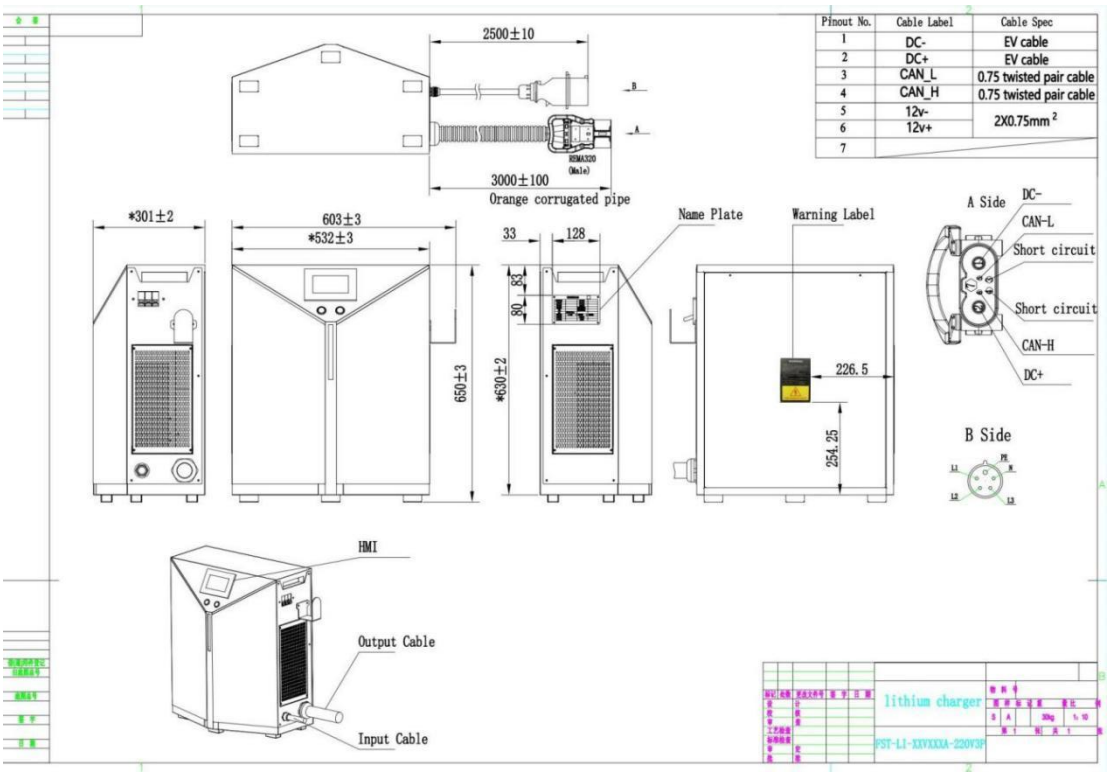

Applicable Models	FST-Li-80V100A-220V3P

NOTE: ALL STANDARD SIZES ARE IN MM

2.5.3 AC600V series

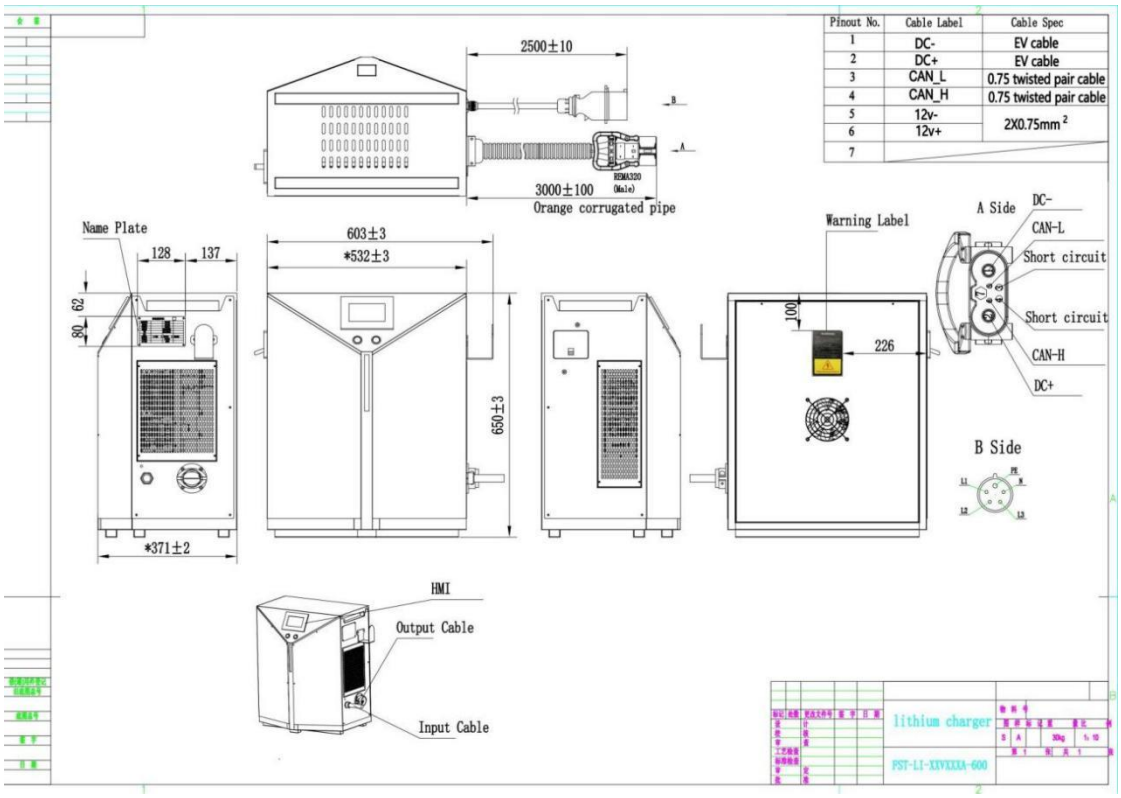

Applicable Models	FST-Li-80V100A-600

NOTE: ALL STANDARD SIZES ARE IN MM

2.5.4 AC480V series

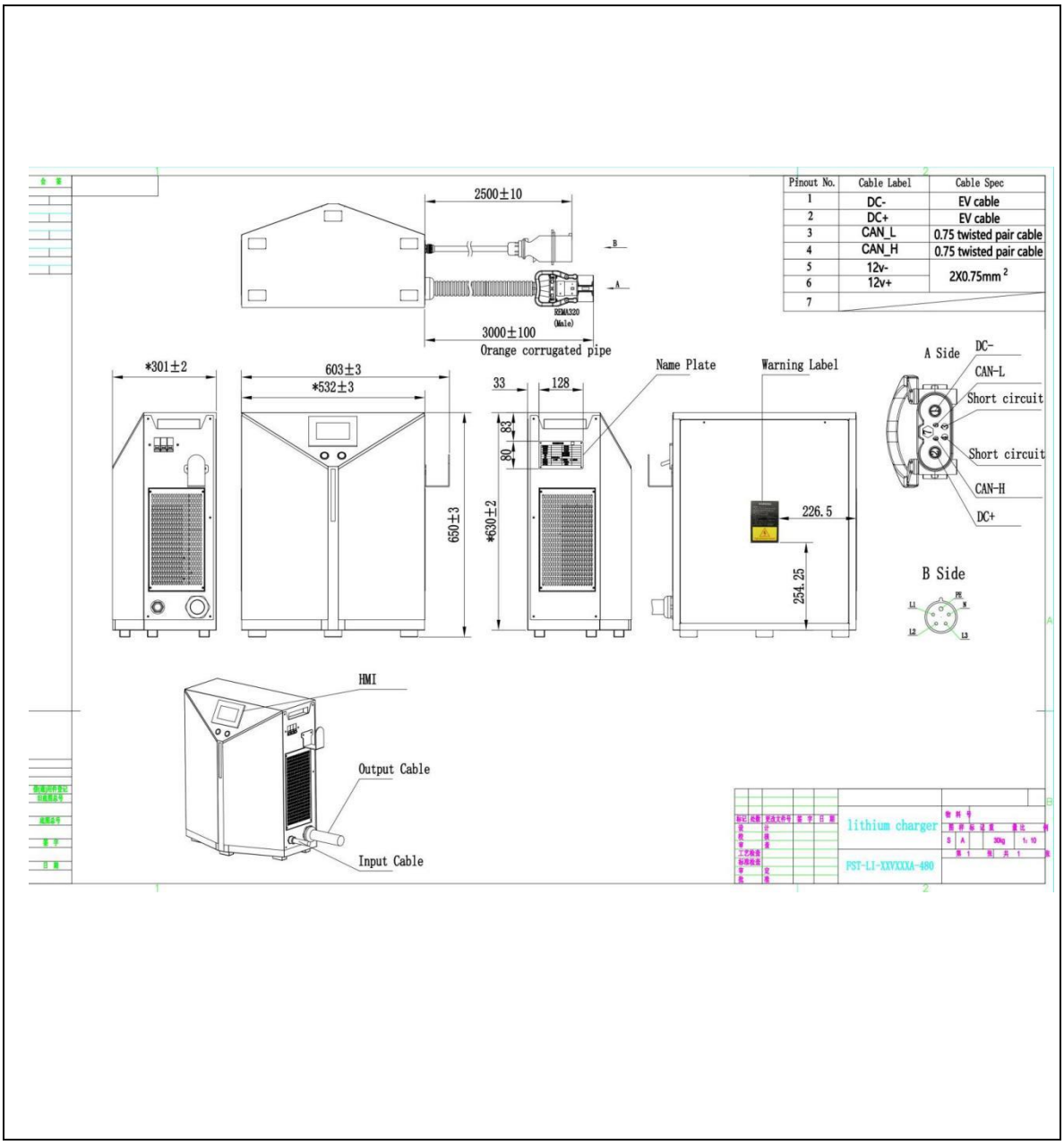

Applicable Models	FST-Li-80V100A-480

NOTE: ALL STANDARD SIZES ARE IN MM

2.6 Technical data sheets

2.6.1 400 Series Charger Technical Parameters

2.6.1.1 Charger appearance parameter table

Name Model	80V 100A
volume (mm)	L:532 W:301 H:650
WEIGHT (KG)	30
AC input（plug）	32
DC output	320
Enter the wire（mm²）	3*6 2*4
Output wires（mm²）	2*25
IP rating	20

2.6.1.2 Electrical performance parameter table

Name Model	80V 100A
Input Voltage (AC)	320-500
Input current Max（A）	20
Input current Rated（A）	18
Operating frequency（hz）	45-65
Input power（KW）	10
Output voltage（DC）	80
Output current（A）	100
Output power（KW）	8
Power factor（PF）	0.99
Operating noise（db）	≤55

2.6.1.3 Electrical function parameter table

Name Model	80V 100A
Phase-loss protection	V
Input undervoltage protection	V
Input overvoltage protection	V
Output undervoltage protection	V
Output overvoltage protection	V
Input overcurrent protection	V
Short-circuit protection	V
Reversepolarity protection	V

2.6.1.4 Work environment support

Name Model	80V 100A
Voltage adaptive（%）	±15
Work Scenario	indoor
Operating temperature（℃）	-20-50
Operating humidity（g/m³）	10-90
elevation（*m）	2000
Dust level	IP20

2.6.1.5 Safety performance

Name Model	80V 100A
Leakage current（ma）	＜10
Ground resistance（Ω）	＜0.1
Transient over-voltages（V）	50
Insulation resistance(Ω)	＞50M
Insulation withstand voltage	3000

2.6.2 220 Series Charger Technical Parameters

2.6.2.1 Charger appearance parameter table

Name Model	80V 100A
volume (mm)	L:532 W:301 H:650
WEIGHT (KG)	30
AC input（plug）	32
DC output	320
Enter the wire（mm²）	3*6 2*4
Output wires（mm²）	2*25
IP rating	20

2.6.2.2 Electrical performance parameter table

Name Model	80V 100A
Input Voltage (AC)	220
Input current Max（A）	32
Input current Rated（A）	26
Operating frequency（hz）	45-65
Input power（KW）	10
Output voltage（DC）	80
Output current（A）	100
Output power（KW）	8
Power factor（PF）	0.99
Operating noise（db）	≤55

2.6.2.3 Electrical function parameter table

Name Model	80V 100A
Phase-loss protection	V
Input undervoltage protection	V
Input overvoltage protection	V
Output undervoltage protection	V
Output overvoltage protection	V
Input overcurrent protection	V
Short-circuit protection	V
Reversepolarity protection	V

2.6.2.4 Work environment support

Name Model	80V 100A
Voltage adaptive（%）	±15
Work Scenario	indoor
Operating temperature（℃）	-20-50
Operating humidity（g/m³）	10-90
elevation（*m）	2000
Dust level	IP20

2.6.2.5 Safety performance

Name Model	80V 100A
Leakage current（ma）	＜10
Ground resistance（Ω）	＜0.1
Transient over-voltages（V）	50
Insulation resistance(Ω)	＞50M
Insulation withstand voltage	3000

2.6.3 480 Series Charger Technical Parameters

2.6.3.1 Charger appearance parameter table

Name Model	80V 100A
volume (mm)	L:532 W:301 H:650
WEIGHT (KG)	30
AC input（plug）	32
DC output	320
Enter the wire（mm²）	3*6 2*4
Output wires（mm²）	2*25
IP rating	20

2.6.3.2 Electrical performance parameter table

Name Model	80V 100A
Input Voltage (AC)	480
Input current Max（A）	20
Input current Rated（A）	12
Operating frequency（hz）	45-65
Input power（KW）	10
Output voltage（DC）	80
Output current（A）	100
Output power（KW）	8
Power factor（PF）	0.99
Operating noise（db）	≤55

2.6.3.3 Electrical function parameter table

Name Model	80V 100A
Phase-loss protection	V
Input undervoltage protection	V
Input overvoltage protection	V
Output undervoltage protection	V
Output overvoltage protection	V
Input overcurrent protection	V
Short-circuit protection	V
Reversepolarity protection	V

2.6.3.4 Work environment support

Name Model	80V 100A
Voltage adaptive（%）	±15
Work Scenario	indoor
Operating temperature（℃）	-20-50
Operating humidity（g/m³）	10-90
elevation（*m）	2000
Dust level	IP20

2.6.3.5 Safety performance

Name Model	80V 100A
Leakage current（ma）	＜10
Ground resistance（Ω）	＜0.1
Transient over-voltages（V）	50
Insulation resistance(Ω)	＞50M
Insulation withstand voltage	3000

2.6.4 600 Series Charger Technical Parameters

2.6.4.1 Charger appearance parameter table

Name Model	80V 100A
volume (mm)	L:532 W:371 H:650
WEIGHT (KG)	80
AC input（plug）	32
DC output	320
Enter the wire（mm²）	3*6 2*4
Output wires（mm²）	2*25
IP rating	20

2.6.4.2 Electrical performance parameter table

Name Model	80V 100A
Input Voltage (AC)	600
Input current Max（A）	20
Input current Rated（A）	10
Operating frequency（hz）	45-65
Input power（KW）	10
Output voltage（DC）	80
Output current（A）	100
Output power（KW）	8
Power factor（PF）	0.99
Operating noise（db）	≤55

2.6.4.3 Electrical function parameter table

Name Model	80V 100A
Phase-loss protection	V
Input undervoltage protection	V
Input overvoltage protection	V
Output undervoltage protection	V
Output overvoltage protection	V
Input overcurrent protection	V
Short-circuit protection	V
Reversepolarity protection	V

2.6.4.4 Work environment support

Name Model	80V 100A
Voltage adaptive（%）	±15
Work Scenario	indoor
Operating temperature（℃）	-20-50
Operating humidity（g/m³）	10-90
elevation（*m）	2000
Dust level	IP20

2.6.4.5 Safety performance

Name Model	80V 100A
Leakage current（ma）	＜10
Ground resistance（Ω）	＜0.1
Transient over-voltages（V）	50
Insulation resistance(Ω)	＞50M
Insulation withstand voltage	3000

2.7 Model description

Take model FST-Li-80V100A-XXX as an example:

The "XXX" part indicates the suffix of the input voltage.

For example, FST-Li-80V100A-400 indicates that the input is a three-phase 400V voltage.

If it is FST-Li-80V100A-480, the input voltage is three-phase 480V. Three-phase 400V and 600V ditto.

FST-Li-80V100A-XXX:

If the rated input voltage is three-phase 400V: FST-Li-80V100A-400

If the rated input voltage is three-phase 480V: FST-Li-80V100A-480

If the rated input voltage is three-phase 220V: FST-Li-80V100A-220

If the rated input voltage is three-phase 600V: FST-Li-80V100A-600

The following models can be described above:

FST-Li-80V100A-XXX:

2.8 Nameplates and logotype

Lithium Intelligent Charger	
Model: FST-Li-80V100A-400	
Input: 400V∼, 3P+PE, 50/60Hz, 20A Max.	
Input voltage range：320V-480∼	
Output: 60-100V⎓, 100A Max., 8KW Max.	
Protective class I	
IP20	
Weight:	
Serial Number:	Manufacture Date:

2.9 Enforce the standard

The charger is designed and manufactured in accordance with the technical specifications that have obtained the following technical certifications Therefore, when used correctly, it does not pose a threat to the safety and health of operators or third parties.
The charger is CE marked The necessary isolation spacing must be observed All circuits use primary and secondary protection devices, which are protected by a set current intensity and trigger characteristics.
All live components are supplied with a casing or a cover that can only be loosened with a tool All cables and plugs are shielded and grounded as specified The charger is designed in accordance with protection class IP 20.
All metal parts are grounded by a ground wire system.
The charger is equipped with a CAN safety function that prevents the battery from overcharging by means of information recognition.

Standard table

serial number	Standard number	Standard name
1	IEC EN 62477	Safety requirements for power electronic converter systems and equipment –Part 1: General
2	IEC 60512-6-4:2002	Dynamic stress test
3	IEC 68-2-27	Impact test
4	IEC 61000-4-2	Electromagnetic Compatibility Test & Measurement Technology Electrostatic Discharge Immunity Test
5	IEC 61000-4-3	Electromagnetic Compatibility Test & Measurement Technology RF Electromagnetic Field Radiated Immunity Test
6	IEC 61000-4-4	Electromagnetic Compatibility Test and Measurement Technology Electrical Fast Transient Burst Immunity Test
7	IEC 61000-4-5	Electromagnetic Compatibility Test & Measurement Technology Surge (Shock) Immunity Test
8	IEC 61000-4-6	Electromagnetic Compatibility Test & Measurement Technology RF field-induced immunity to conducted disturbances
9	IEC 61000-4-11	Electromagnetic compatibility test and measurement technology voltage
10	IEC 61000-6-2	Common Criteria - Immunity to Industrial Environments
11	IEC 61000-6-4	General Criteria - Emission standards for industrial environments
12	IEC 60529:2001	Enclosure rating
13	EN 50699	Recurrent Tests of Electrical Equipment
14	UL1564	Industrial battery chargers
15	CSA-C22.2 no.107.2-01	battery chargers
17	CEC-400-2017-002	2016 APPLIANCE EFFICIENCY REGULATIONS
18	FCC part 15	part15-radio frequency devices

3 Safety

3.1 Safety tips for installation

3.1.1 Fire hazard

⚠DANGER

- There must be no flammable materials near the charger Included shipping and packaging materials are included:
- There must be no flammable materials within 2.5 m of the charger.
- The horizontal distance between the charger and the combustible material is at least 2.5 m It is forbidden to store flammable materials (e g on shelves) above the charger or to use flammable building materials The distance from areas with a risk of fire, explosion and explosives must be at least 5 m .

3.1.2 Water ingress risk

⚠DANGER

There must not be any liquid in the vicinity of the charger.
Do not place any liquid on top of the charger.

3.1.3 Stress risk

⚠DANGER

- Avoid the charger exceeding the stress level and do not place anything on top of the charger.
- Electrical installation according to uniform regulations (wire cross-sections, safety devices, ground connections)Avoid the input and output stress of the charger exceeding the range, and do not modify any parameters of the cable (including length, wire diameter, voltage carrying range, etc.) without the authorization of the local distributor.Before electrical installation, please check the parameters on the nameplate (voltage/frequency/current, etc.) and compare them with the performance parameters of the power connector. Prevent the charger from ultra-high stress ranges (voltage, frequency, and current) by connecting the grid safety device in series.

3.1.4 Water ingress risk

⚠DANGER

- Missing or improperly designed leakage protection devices can lead to a risk of electric shock and fire .
- Missing or poorly designed residual current protection devices can cause fatal injuries by causing electric shock or fire in the event of a malfunction necessary, use Type B or B+RCD (Residual Current Device, RCD).
- In order to operate the charger, the location of use must have a grid interface The supply voltage and frequency must match the instructions on the rating plate (see the section "Identification and Labeling on the Charger") As specified, grid interfaces must be properly grounded .
- The charger must be protected from excessive contact voltages according to the regulations of the local power supply unit (EVU) .
- If the power cord of the charger is damaged, it must be replaced by the local distributor or its customer service department or appropriate qualified personnel to avoid danger.

3.1.5 Installation environmental risks

⚠WARNING

- The side distance to the next charger is at least twice the width of the charger If the spacing to the next charger cannot be respected, the chargers need to be staggered.
- Please install the charger in a vertical position, and there are no foreign objects around the fan to prevent the fan from getting foreign objects inside the charger when working Do not allow horizontal installation.
- Maintain a minimum lateral distance of 0,5 m from the next wall.
- Do not install this charger in a commercial environment.
- Fire extinguishing equipment must be prepared around the charger.
- Ensure optimal ventilation of the charger：
- When installing/installing the charger, you should pay attention to:
  - No corrosive gases, e g acid gases,
  - No conductive dust, such as soot or metal dust,
  - No excessive non-conductive dust is deposited,
  - No water should enter the inside of the charger
- Pay attention and comply with the regulations set by the battery local distributor.
- In addition to the restrictions on the choice of installation site mentioned in this operating instruction national regulations must be observed.

3.1.6 Appearance warning

⚠WARNING

The charger has an IP 20 degree of protection against Moisture Ingress and is specially designed for indoor use This is identified by the character 5957 in accordance with IEC 60417.	
Please read the operating instructions carefully before use The work of the battery and charger should only be carried out by a professional following instructions The operating instructions must be placed in a prominent location and easily accessible.	
Avoid open flames or open ignition sources near the battery or charger,and do not smoke.	
Make sure there is adequate ventilation in the chargingarea and do not disconnect. Note:Dirty batteries or chargers require personal protective equipment (e.g., protective glasses and gloves).	
If your charger is not working poperly,you will face many dangers Such as electrical hazards due to mains currents or hazards due to Other causes should be repaired immediately by an authorized Professional. note: high-performance lithium-ion batteries generate extremely high short-circuit currents The metal part is always live, so do not place foreign objects or tools on the battery Take care to comply with accident prevention regulations such as DIN EN 62485-3.	
Pay attention to the correct use of the charger as prescribed Otherwise it may lead to greater danger Unprofessiona l or incorrect use will invalidate the product Do not cover the charger in any form during charging In addition, it is necessary to pay attention to the installation instructions	
Used chargers are hazardous waste and require special disposal Do not dispose of this product in household waste In accordance with the European WEEE Directive 2012/19/EU on waste electrical and electronic equipment (which has been transposed into national law) used power tools must be collected separately and recycled in an environmentally friendly manner Be sure to return your used charger to the dealer or get information about your local authorized collection and disposal system	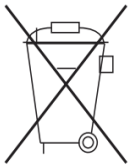

3.2 Use safety reminders

3.2.1 Pre-use safety reminders

⚠DANGER

- Check before each use of the charger.
- The space for forklift charging should be kept fully ventilated.
- There is no clogging of the fan and no foreign objects around None of the vents were blocked Within a radius of at least 2,5 m around the forklift that needs to be charged, flammable materials and work equipment that could generate sparks must not be placed.
- There are no flammable, explosive, or combustible materials, chemicals, flammable vapors, and other dangerous items in the vicinity of the charger.
- Ensure that the available space around the battery charger is sufficient to provide adequate ventilation and easy access to the cable socket .
- Make sure the charger is not in the environment where any liquid gets in, and do not pour liquid into the charging case or place it on top of the charger.
- Confirm that nothing has been placed on the output cable and input power cord or place it where you can step on it.
- Confirm that there are no defects, cracks, worn, or exposed copper wires inside the output plug and cable, and that the charging output plug is clean and dry, and that there are no dirt, iron filings and other foreign objects inside, and that the cable is not entangled with any items, and that there are no knots.
- Make sure the input and output cables are not scattered and tangled, people may get entangled or trip over the scattered and surrounded cables.
- Confirm that the input plug and wire are free of defects, cracks, wear, or exposed copper wires inside the cable, and that the charging input plug is clean and dry, and that the metal contacts are free of dirt, iron filings and other foreign objects, and that the metal contacts are in a shiny state.
- Whether the grid interface is intact .
- Whether the enclosure is intact or not .

3.2.2 Run and operate safety reminders

⚠DANGER

- Before connecting the output, make sure that there is no fault information on the charger display Interface.
- Do not connect batteries that cannot be charged.
- Do not connect any commercial batteries.
- Do not connect any lead-acid batteries.
- It is forbidden to smoke or use an open flame around the battery.
- Make sure that liquid does not flow into the inside of the charger.
- Before connecting the battery, it is essential to check and follow the instructions on the rating. voltage of the allowable battery voltage (see the "Identification and Labeling on the Charger" section) Place the battery in front of or next to the charger so that the battery plug is within the operating distance of the charger's charging cable (standard 2,5 m).
- The relevant safety regulations of the local distributor of the battery and the charging station must be strictly followed.
- The charger input and output cables can only be connected or unplugged when the charger and forklift are turned off.
- If the charging process is interrupted by unplugging it, there is a risk of personal injury The resulting spark can ignite the charging gas formed during charging, which can cause a fire or explosion.

- For chargers whose charging procedures can be changed subsequently, the operator is obliged to record the applicable battery type on the housing.
- If it is determined that there are safety-related changes, damage, or other defects in the charger or in performance, the charger must not be used until repairs have been carried out in accordance with the regulations.
- If you find any damage, you can immediately feedback with the local distributor.
- Mark the damaged charger and deactivate it.
- The charger should only be reused after the fault has been identified and troubleshooting.
- Do not unplug the charger input power plug while the charger is working.
- Do not unplug the charger output while the charger is working.
- Do not directly touch the surface of the charger when the charger is working to avoid high temperature burns.

3.2.3 Safety reminder after use

⚠CAUTION

- Prerequisite.
- The charger is fully charged or standby.
- The charger is paused.
- Procedure.
- Turn off the charger air switch.
- Disconnect the charger input.
- Disconnect the charger output.
- When the charging process is over, roll up the charging cable or place it on the cable holder, and when placing the cable, make sure it doesn't get tangled or trip over people.

3.3 Service Safety Reminder

⚠DANGER

Dangerous voltage warning.

- Chargers are electrical devices in which voltage and current can endanger personal safety.
- The charger should only be operated by a trained and authorized professional.
- Before intervening in the charger or working on the charger, the power supply should be disconnected,and, if necessary, the battery should be disconnected.
- The inside of the charger can only be opened and repaired by obtaining local distributor authorized service

  The charger must be separated from the power supply and battery before maintenance or repair work begins.
- After 5 minutes of separation from the grid and the battery, the charger's housing can be opened from which the installed capacitors can be unloaded.
- No alterations, modifications and additions to the charger that affect safety are allowed without the local distributor's permission! This also applies to the installation and setting of safety devices• Special

  care should be taken not to narrow the spacing and air gaps.
- The spare parts used must meet the technical requirements specified by the local distributor This is always ensured by the use of original spare part.

3.4 Maintenance safety tips

⚠DANGER

Dangerous voltage warning.

- Chargers are electrical devices in which voltage and current can endanger personal safet The charger should only be operated by a trained and authorized professional.

⚠CAUTION

The wear and tear of the required maintenance parts is highly dependent on the actual operation and conditions of use of the charger. The following must be checked monthly.

- Whether the signal pin inside the output plug-in is firmly linked.
- Clean the dust of the filter screen at the air inlet of the fan, and replace it immediately if it is damaged.
- Use a dry rag to remove any foreign matter from the inside of the plug-in and the signal pin.
- Whether the grid interface is intact.
- Whether the enclosure is intact.
- Whether the insulation of the grid interface cable is intact.
- Whether all bolted joints are fixed or not.

⚠WARNING

- The following safety tests must be performed every 6 months or after the replacement of repair part. Ground resistance test.
- Insulation resistance test.
- Hipot test.
- Leakage current test.
- Output surge.
- Voltage dip test.
- Leakage protection.
- Protection against electric shock.

4 operation

4.1 Installation

4.1.1 Disassemble the box

⚠WARNING

Wear protective gloves when using any tools.

Use a tool to disassemble the box and Remove the charger from the box.	
Remove the protective mold.	

4.1.2 Install an industrial plug or socket

⚠DANGER

- The following work should only be performed by trained and authorized professionals.
- Do not install the device with electricity.

Check if the charger has an industrial plug installed, if not, please install the industrial plug as needed, we provide the following connections: 1. Industrial five-core: L1 connection black cable, L2 connection brown cable, L3 connection gray cable, N connection blue cable, PE connection yellow and green cable 2. Industrial four-core: L1 connection black cable, L2 connection brown cable, L3 connection gray cable PE connection yellow and green cable.	
Schematic diagram of the completion of the connection.	

Note: The normal state is to carry the industrial plug by default, if you need to remove the industrial plug and want the cable to connect directly to the grid, please follow the IEC60446 standard to connect.

Note: The charger industrial plug current varies according to the model, see Section 2.6.

4.1.3 Installation of industrial sockets

⚠DANGER

- The following work should only be performed by trained and authorized professionals
- Do not install the device with electricity.
- Please use an outlet that matches the charger (current).

Use the socket provided in the charger box, and connect the grid side as follows

1. Industrial five-core: L1 connection black cable, L2 connection brown cable, L3 connection gray cable, N connection blue cable, PE connection yellow and green cable.

2. Industrial four-core: L1 connection black cable, L2 connection brown cable, L3 connection gray cable PE connection yellow and green cable.

Note: All chargers will carry an outlet that matches the industrial plug by default if you want to permanently connect the charger to the grid, please follow the IEC60446 standard.

4.1.4 Grid safety devices

⚠DANGER

- The following work should only be performed by trained and authorized professionals.
- Do not install the device with electricity.

⚠DANGER

- Missing or improperly designed leakage protection devices can lead to a risk of electric shock and fire.
- Missing or poorly designed residual current protection devices can cause fatal injuries by causing.
- Electric shock or fire in the event of a malfunction.
- necessary, use Type B or B+RCD (Residual Current Device, RCD).
- In order to operate the charger, the location of use must have a grid interface The supply voltage and frequency must match the instructions on the rating plate (see the section "Identification and Labeling on the Charger") As specified, grid interfaces must be properly grounded.
- The charger must be protected from excessive contact voltages according to the regulations of the local power supply unit (EVU).
- If the power cord of the charger is damaged, it must be replaced by the local distributor or its Customer.
- service department or appropriate qualified personnel to avoid danger.
- Do not install the device with electricity.

Refer to the following table for the safety device of the series power grid

Current rating	Grid safety devices	remark
> 0 to 6 A	6 A gL	A gL fuse can be used Or use a circuit autoprotector with K performance
> 10 to 16 A	16 A gL	
> 16 to 18 A	20 A gL	
> 18 to 23 A	25 A gL	
> 32 to 32 A	35 A gL	

The output current rate of the charger is detailed on the rating plate

charger		Fuse data[A]
Output current [A]		At an output voltage of 80 V
from	reach	/
0	100	600
100	150	600
150	200	600
charger		Fuse data[A]
Output current [A]		At an output voltage of 80 V
from	reach	/
0	100	600
100	150	600
150	200	600

4.1.5 Install the charger

⚠DANGER

- The following work should only be performed by trained and authorized professionals.
- There must be no flammable materials near the charger Included shipping and packaging materials are included.
- There must be no flammable materials within 2.5 m of the charger.
- The horizontal distance between the charger and the combustible material is at least 2.5m It is forbidden to store flammable materials (e g on shelves) above the charger or to use flammable.
- The distance between the material and the area where there is a risk of fire, explosion and explosion
- must be at least 5 meters.
- There must not be any liquid in the vicinity of the charger.
- Do not place any liquid on top of the charge.

⚠WARNING

- The following work should only be performed by trained and authorized professionals.
- The side distance to the next charger is at least twice the width of the charger If the spacing to the
- next charger cannot be respected, the chargers need to be staggered.
- Please install the charger in a vertical position, and there are no foreign objects around the fan to prevent the fan from getting foreign objects inside the charger when working Do not allow horizontal installation.
- Maintain a minimum lateral distance of 0,5 m from the next wall.
- Do not install this charger in a commercial environment.
- Fire extinguishing equipment must be prepared around the charger.
- Ensure optimal ventilation of the charger.
- When installing/installing the charger, you should pay attention to:
  - No corrosive gases, e g acid gases,
  - No conductive dust, such as soot or metal dust,
  - No excessive non-conductive dust is deposited
  - No water should enter the inside of the charger
- Pay attention and comply with the regulations set by the battery local distributor.
- In addition to the restrictions on the choice of installation site mentioned in this operating Nstruction national regulations must be observed.

⚠WARNING

- This series of chargers is suitable for charging industrial lithium batteries Any other use of the equipment is non-compliant and may result in injury, damage to the equipment, or other property Damage.
- The rated operating input voltage range, frequency range, maximum input current, and input power are all specified in detail on the nameplate.
- The rated working output voltage range, current range, and constant power are all specified in detail on the nameplate.
- Used in industrial environments.
- The permissible temperature range is between -10°C and 45°C .
- Relative humidity is 5%~95%.
- The altitude should not exceed 2000 m .
- Input voltage fluctuation range of ±15%.
- Storage temperature: -20 °C~75 °C.
- Storage humidity 5%~95%.

Schematic diagram of the completion of the installation	

Note: If the environmental conditions exceed the above range, you should contact us in advance to negotiate and solve.

4.2 Operators Daily Checklist

⚠WARNING

- The forklift charging space is kept fully ventilated.
- The fan is not clogged, there is no foreign object around and not a single vent is clogged.
  Within a radius of at least 2,5 m around the forklift that needs to be charged, no flammable materials and work equipment that could generate sparks are placed.
- There are no flammable, explosive, or combustible materials, chemicals, flammable vapors, and other to the cable socket.
- dangerous items in the vicinity of the charger.
- The available space around the charger is sufficient to provide adequate ventilation and easy access to the cable socket.
- The charger is not in an environment where liquid has entered and has some waterproof measures Nothing is placed on the output cable and input power cord, or placed in a place where people cannot step on it.
- There are no defects, cracks, worn or exposed copper wires on the surface of the output plug and cable, the charging output plug is clean and dry, there is no dirt, iron filings and other foreign Objects inside, and the cable is not entangled with any items and is not knotted.
- The input and output cables are not scattered and tangled, and people can get entangled or trip over the scattered and surrounded cables.
- Confirm that there are no defects, cracks, worn, or exposed copper wires inside the input plug and wires and cables, that the charging input plug is clean and dry, that the metal contacts are free of foreign objects such as dirt and iron filings, and that the metal contacts are in a shiny state.

⚠WARNING

Never start the charger until any damage or malfunction of the charger has been resolved.

4.3 Start the charger

⚠DANGER

- Before connecting the output, make sure that there is no fault information on the charger display interface.
- Do not connect batteries that cannot be charged.
- Do not connect any commercial batteries.
- Do not connect any lead-acid batteries.
- It is forbidden to smoke or use an open flame around the battery.
- Make sure that liquid does not flow into the inside of the charger.
- Before connecting the battery, it is essential to check and follow the instructions on the rating voltage of the allowable battery voltage (see the "Identification and Labeling on the Charger" section)
  Place the battery in front of or next to the charger so that the battery plug is within the operating distance of the charger's charging cable (standard 2,5 m).
- The relevant safety regulations of the local distributor of the battery and the charging station must be
  strictly followed.
- The charger input and output cables can only be connected or unplugged when the charger and forklift are turned off.
- If the charging process is interrupted by unplugging it, there is a risk of personal injury The resulting

spark can ignite the charging gas formed during charging, which can cause a fire or explosion.

- For chargers whose charging procedures can be changed subsequently, the operator is obliged to record the applicable battery type on the housing.

- If it is determined that there are safety-related changes, damage, or other defects in the charger or in performance, the charger must not be used until repairs have been carried out in accordance with record the applicable battery type on the housing.
- If you find any damage, you can immediately feedback with the local distributor.
- Mark the damaged charger and deactivate it.
- The charger should only be reused after the fault has been identified and troubleshooting.

⚠WARNING

Wipe off any water stains on your hands to avoid electric shock

Connect the charger AC input to the power grid.	
Turn on the charger air switch.	

Using the charger output connector, connect the battery.	
Press the start button on the front panel of the charger to make the charger start and enter the working state.	

Note: The plug needs to be securely connected at a height of 1 meter from the ground.

4.4 Working status

⚠WARNING

- Do not unplug the charger input power plug while the charger is working.
- Do not unplug the charger output while the charger is working.
- Do not directly touch the surface of the charger when the charger is working to avoid high temperature burns.

Light Strip Color	Charger State	Photo
RED	Charging	
GREEN	Standby or fully charged	
YELLOW	Fault	

4.5 Running curves

The charger will output the corresponding voltage and current according to the lithium battery CAN message, the above curve is only test data, it does not mean that the charger will be charged according to this curve.	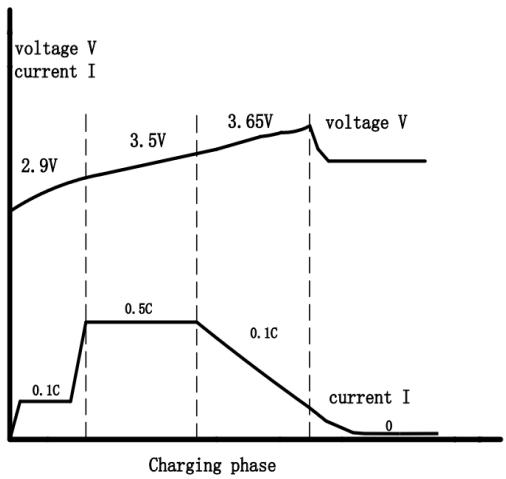

Note: In the curve, V represents the voltage of the monomer, 24V monomer = 8 strings, 48Vmonomer =15 strings, 80V monomer = 24 strings. The calculated curve voltage should = number of cells * cell Voltage.

Note: In the curve, C is equal to the actual capacity of the battery. In the calculation, the current Operating current should = the actual capacity of the battery * the current execution multiple, For example, the 80V400AH battery needs to be charged, according to the above graph, the working logic of the charger should be that when the voltage is lower than 69.6V, the charger will output 40Acurrent.

When the battery voltage is greater than 69.6V and lower than 84V, the charger will output 200A current. When the battery voltage is greater than 84V and lower than 87.6V, the charger will output 40A current and maintain it until the battery is fully charged.

4.6 Once the operation is complete

Disconnect the charger input.
Disconnect the charger output.
When the charging process is over, roll up the charging cable or place it on the cable holder, and when placing the cable, make sure it doesn't get tangled or trip over people.

Use the charger that was placed after completion	

4.7 Accessibility

4.7.1 The main interface of the charger

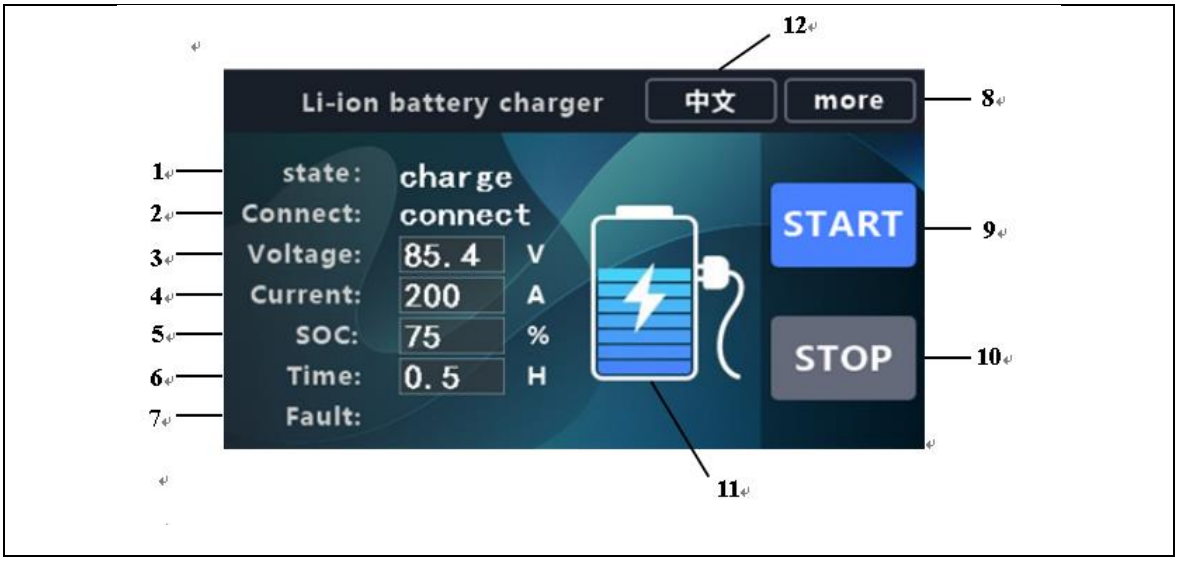

The main page displays the following charging information:

1、working state	7、fault info
2、connect state	8、more info
3、output voltage	9、start charge
4、output current	10、stop charge
5、SOC	11、battery BMS info
6、charging time	12、Language switching

Click the start button and stop button to control the charger to start and stop.
The charger supports English and Chinese. You can change the language of the Charger by clicking the.
Chinese and English switch button. This language switch button can be hidden.

4.7.2 Battery information inquiry

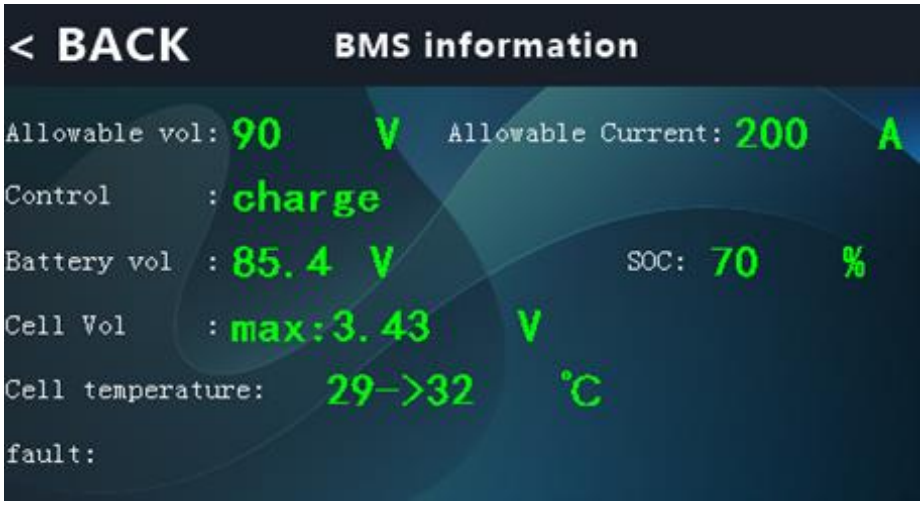

Click battery info icon(11) enter battery BMS info interface:
The battery information interface contains various parameters sent by the.
battery to the charger, such as demand voltage, demand current, control status and other information.

4.7.3 Functional interface

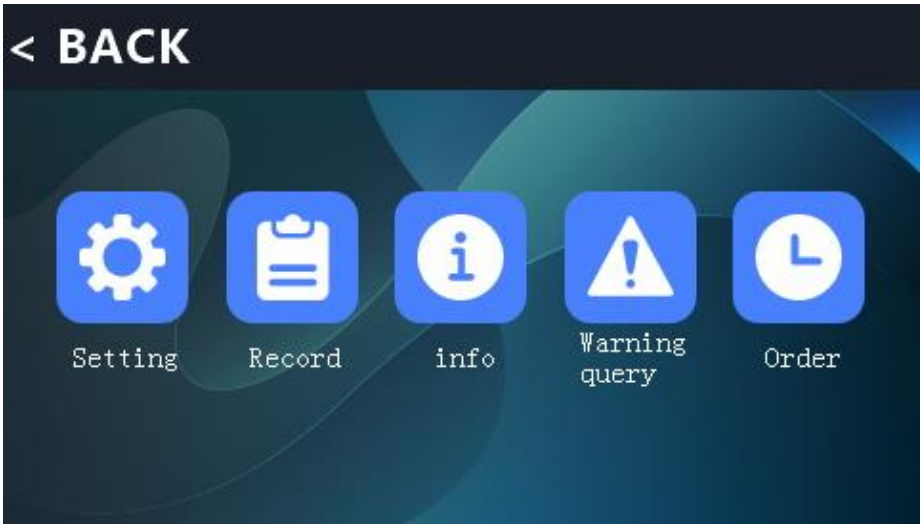

Click more (8) enter function setting interface:

1、Parameter Setting	4、Fault and solution
2、Charging Record	5、Charging time appointment
3、Charger specification info	

4.7.4 Parameter settings

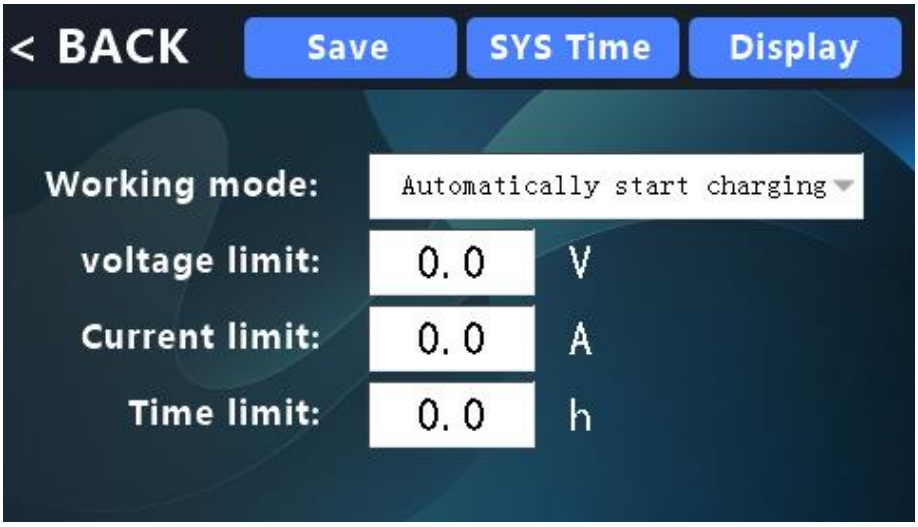

Click setting(1) icon to enter the setting function interface:

1、working mode options (automatic&Manual)	5、save the parameter setting
2、charger output voltage limit	6、save the parameter setting
3、charger output current limit	7、change the display style
4、charging time limit	

Detail introduction of the parameter setting interface:

- Working mode setting: The charger is divided into two modes: manual charging and automatic charging, which can be adjusted according to needs.
- Start charging manually: After connecting the battery with the charger, you need to press the start button for the charger to start charging.
- Auto-start: When you click this option, when the battery is connected to the charger, the charger can start charging on its own without pressing the Start button.
- Output voltage limit: The voltage output by the charger can be set.
- Output current limit: The current output of the charger can be set.
- Charging time limit: limit the working time of the charger, and it will stop automatically when the set value is reached.
- Parameter setting save.
- System time: View the system time and change the time manually.
- Display style: Click to switch display style.
- Note: Limitations feature explained:
- Output Voltage Limit: The voltage can be set according to the maximum output of the charger, such as FST-Li-48V150A-XXX, this charger can reach 0-60V,
- Output voltage limit: The current can be set according to the maximum output of the charger, such as FST-Li-48V150A-XXX, this charger can reach 0-150A,
- Charging time limit: The charger can work at a preset time, if you want the charger to work at night, you can calculate it according to the current time and calculate the value that can be filled.

Note: If you change the above parameters, you need to click Save and return.

4.7.5 Charging record interface

Click setting(1) icon to enter the setting function interface:
Charging record interface:

1、charging serial number	6、charging end time
2、start SOC	7、charging fault record
3、end SOC	8、last charging record
4、battery charging AH Value	9、next charging record
5、charging start time	10、clear

The charger record query interface allows you to view the charger record. The charger records include :
start time , end time , battery SOC at the beginning , battery SOC at the end , each charging time , each charging energy and fault information etc.

4.7.6 Charger information inquiry

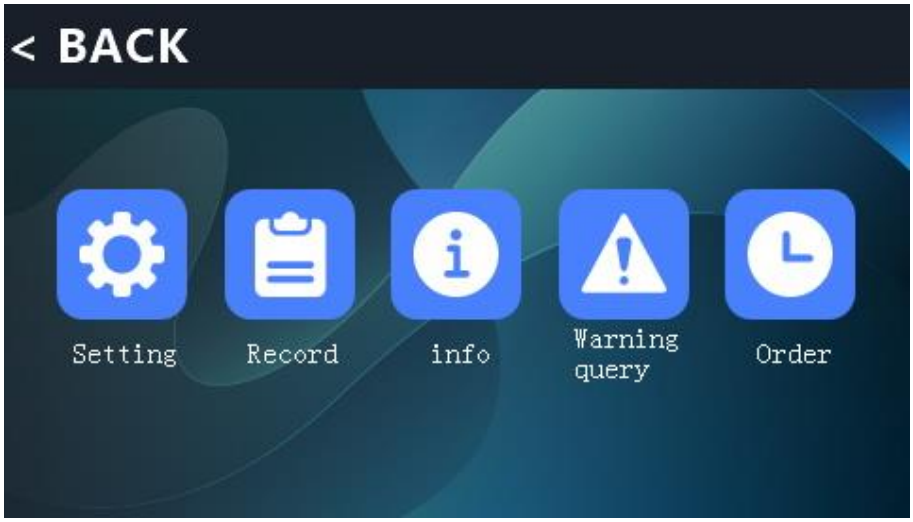

Charger specification information interface:
Click the info icon:

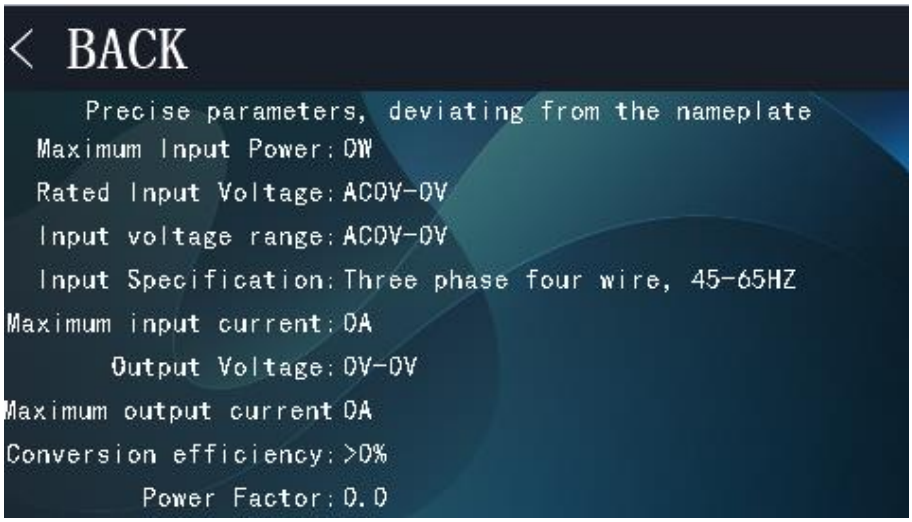

Charger specification information interface:
Enter the charger information interface to view the specific parameters of the charger .
Including information such as the charger's rated input voltage, input voltage range, maximum input current, output voltage, maximum output current and conversion efficiency.

4.7.7 Warning information query

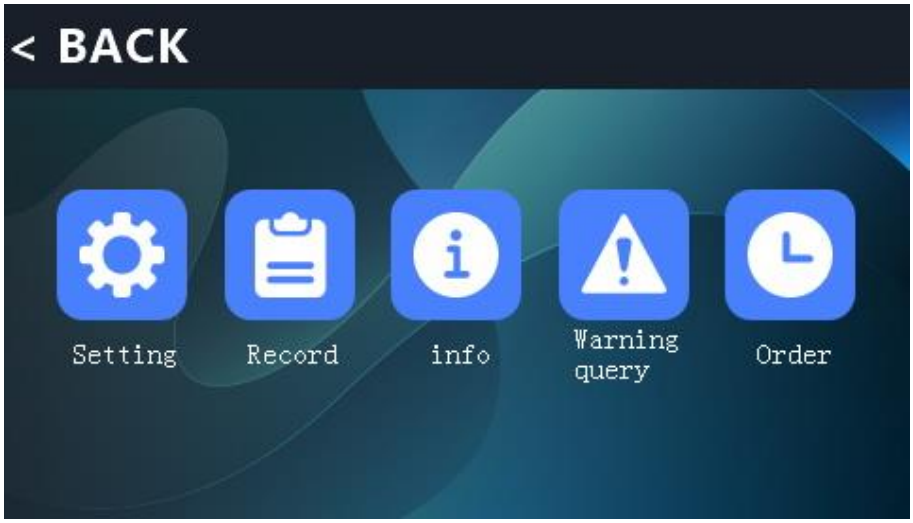

Click the warning query icon:

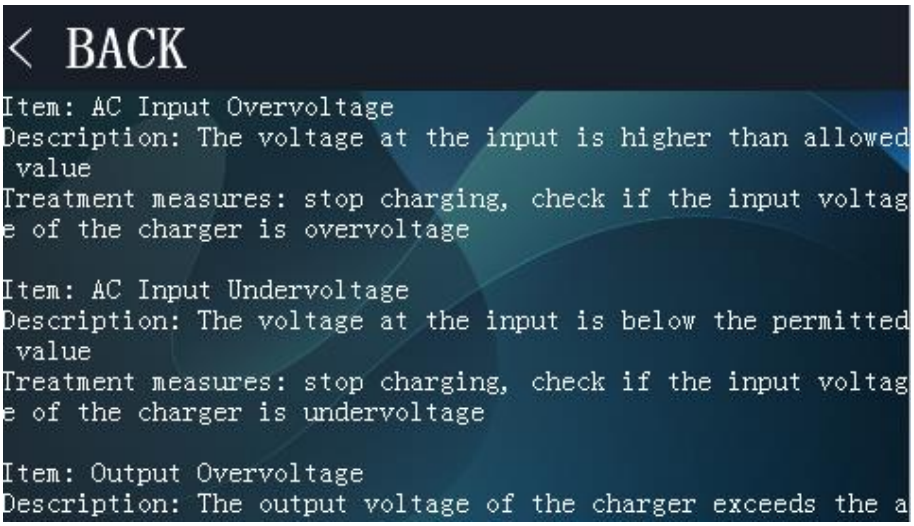

Charger warning query: Click More on the main page and click warning Query to view fault items, fault descriptions, and solutions.

4.7.8 Timed charging function

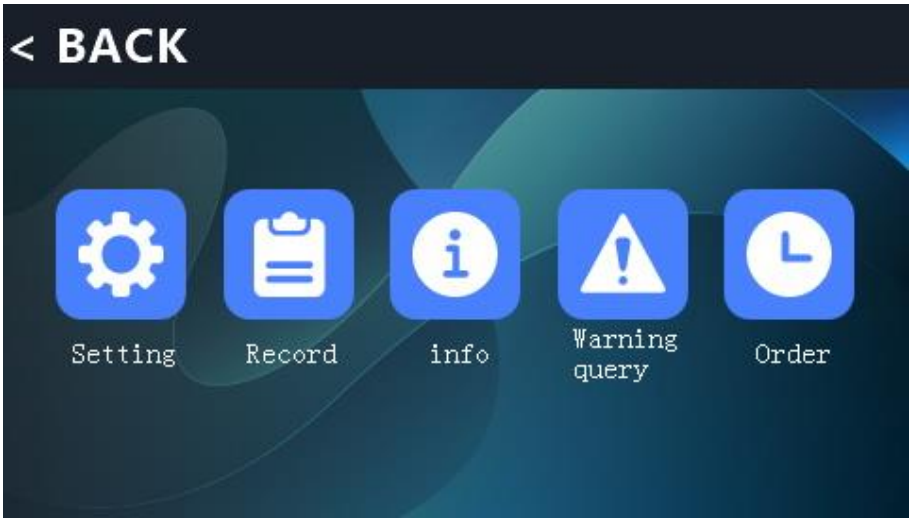

Click order icon:

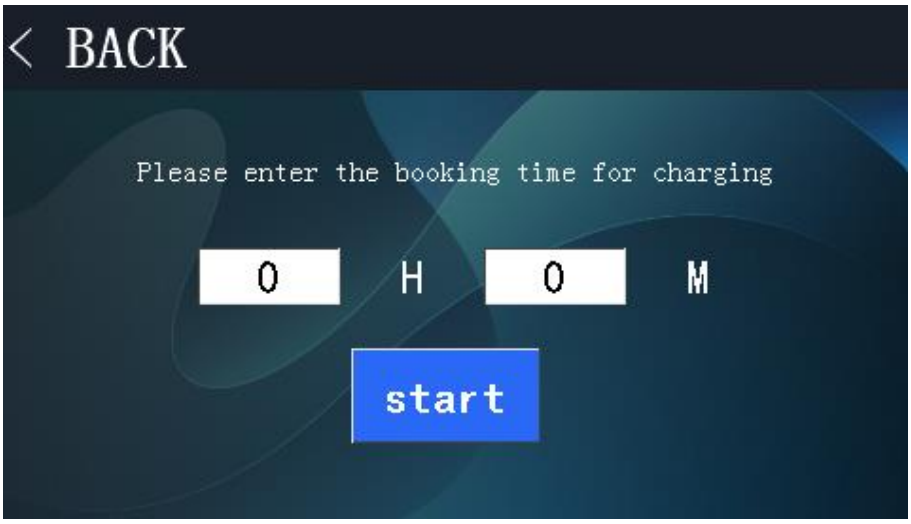

Charger reservation time setting: Click More on the main page, click Order, enter the scheduled charging interface, fill in the time you want to charge, click Start, the charger will start counting down, and when the time is up, the charger will automatically start charging without manual labor.

4.7.9 Historical data query

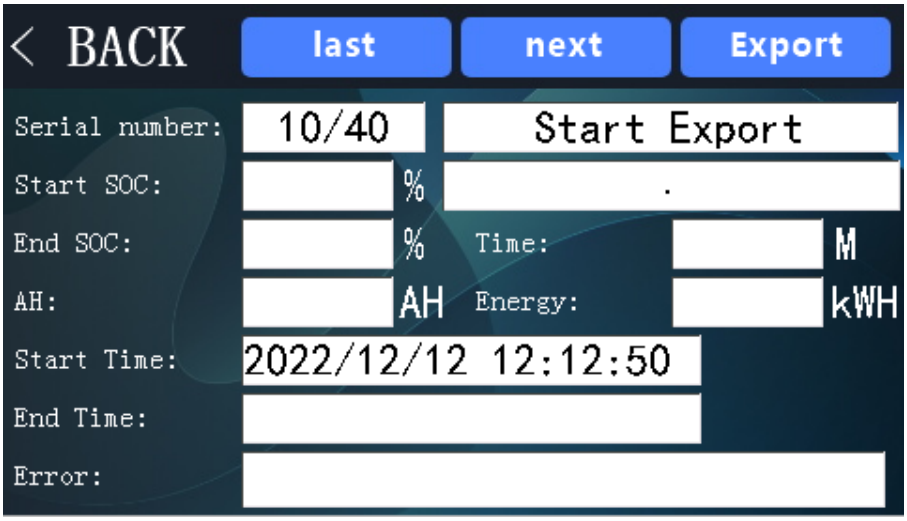

Historical charger data query

The charger record query interface allows you to view the charger record . Charging records can Be exported to TF card. The charger records include : start time , end time , battery SOC at the Beginning battery SOC at the end , each charging time , each charging energy and fault information .

Note: please note this is an option function, if need such function, please contact local distributor.

5 Description of the fault

5.1 Fault table

Fault Code	Item	Description
1	BMS hardware failure	BMS Battery failure
2	BMS Communication Fault	Communication between the charger and BMS is interrupted
3	Battery Overvoltage	The output voltage is higher than the allowable value
4	Battery Undervoltage	The output voltage is lower than the allowable value
5	Battery Overtemperature	The battery temperature is higher than the allowable value.
6	Battery Low Temperature	The battery temperature is lower than the allowable value.
7	BMS voltage imbalance	Excessive voltage difference in the battery pack
8	BMS temperature difference	Excessive temperature difference in the battery pack
9	BMS other failure	Unknown malfunction in the BMS
10	AC Input Overvoltage	The input voltage is higher than the allowable value
11	AC Input Undervoltage	The input voltage is lower than the allowable value
12	AC input phase loss(Only applicable to three-phase input)	AC input phase loss
13	Output Overvoltage	The output voltage is higher than the allowable value
14	Output overcurrent	Charger's output current exceeds the allowed limit
15	Output short circuit fault	Short circuit at the charger's output terminal
16	Battery reverse connection fault	Battery's positive and negative terminals are connected in reverse
17	Charger overheating	Charger overheating
18	Hardware failure	Charger hardware malfunction
19	Fan failure	Fan cannot start properly
20	Relay failure	Relay cannot operate
21	Other hardware failure	Unknown malfunction in the charger

5.2 Simple breakdown repairs

5.2.1 BMS series failure

BMS (Battery Management System) faults range from 1 to 9, please refer to the battery manual.

⚠DANGER

Before intervening with the charger, disconnect the charger input and output.

BMS hardware failure Solution: Please consult the battery repair manual.	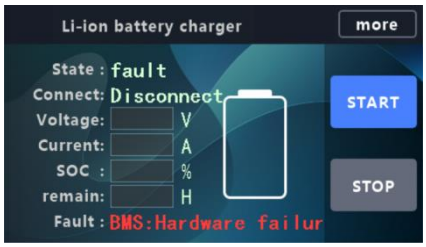
BMS Communication Fault Solution: Please consult the battery repair manual.	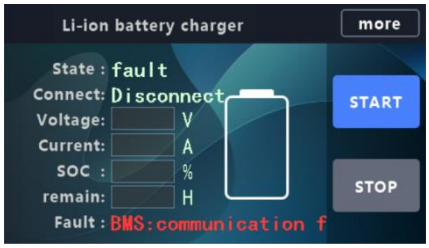
Battery Overvoltage Solution: Please consult the battery repair manual.	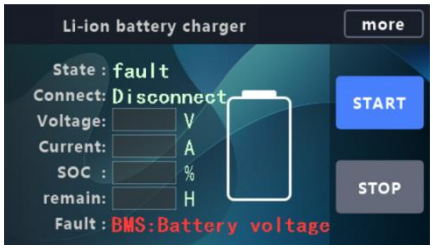
Battery Undervoltage Solution: Please consult the battery repair manual.	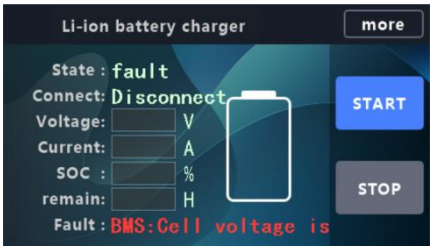

Battery Overtemperature
Solution: Please consult the battery repair manual.

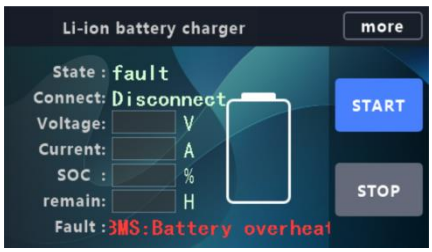

Battery Low Temperature
Solution: Please consult the battery repair manual.

BMS voltage imbalance
Solution: Please consult the battery repair manual.

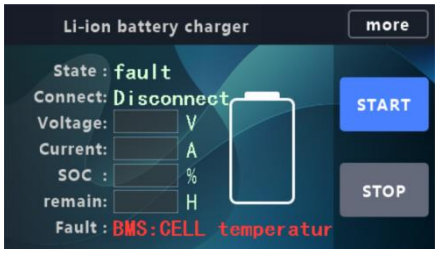

BMS temperature difference
Solution: Please consult the battery repair manual.

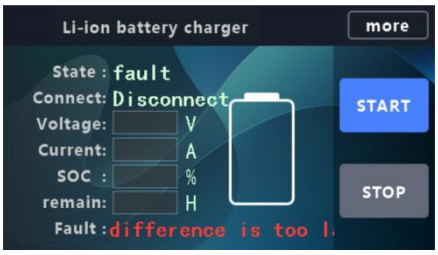

BMS other failure
Solution: Please consult the battery repair manual.

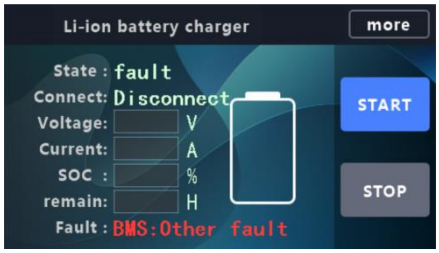

5.2.2 Fault 10&11: AC Input Overvoltage

BMS (Battery Management System) faults range from 1 to 10, please refer to the battery manual

⚠DANGER

- The following faults need to be carried out by a professional electrician.
- Before intervening with the charger, disconnect the charger input and output.
- Do not touch the metal surface on the outside of the charger to avoid high temperature burns.

Cause of failure: The AC input voltage exceeds the allowable range of the Charger Solution: Adjust the power grid.

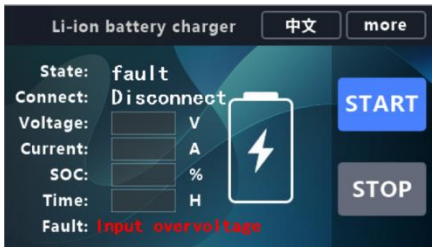

Cause of failure: The AC input voltage is lower than the range of the charger Solution: Adjust the power grid.

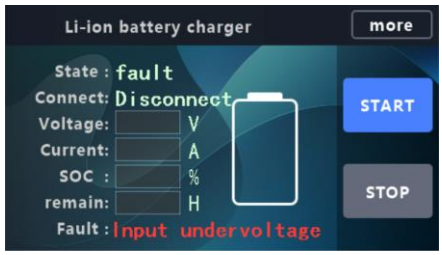

5.2.3 Fault 12 AC input phase loss

⚠DANGER

- The following faults need to be carried out by a professional electrician
- Before intervening with the charger, disconnect the charger input and output
- Do not touch the metal surface on the outside of the charger to avoid high temperature burns

Cause of failure: three-phase power loss of one phase.
Solution: Check whether the loss on the grid side is phased, check whether the wiring at the air switch is loose, and check whether the input terminal of the power module is loose.

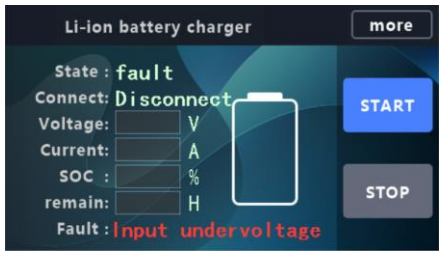

5.2.4 Fault 13&14: Output Overvoltage & Output Overcurrent

⚠DANGER

- The following faults need to be carried out by a professional electrician.
- Before intervening with the charger, disconnect the charger input and output.
- Do not touch the metal surface on the outside of the charger to avoid high temperature burns.
- When detecting the output voltage, voltage, and current, do not touch any of the metal contacts of the connector with your hands.
- Please wear gloves when using tools.

Cause of failure:
Output over voltage: the output voltage of the charger exceeds the Max value.
Output under voltage: the output voltage of the charger is lower than Minimum value.

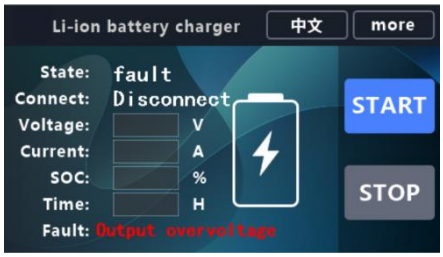

Cause of failure: The output current of the charger exceeds rated current.

Solution: Revise the output current value of the charger to rated current.

5.2.5 Fault 15：Output short circuit

⚠DANGER

- The following faults need to be carried out by a professional electrician.
- Before intervening with the charger, disconnect the charger input and output.
- Do not touch the metal surface on the outside of the charger to avoid high temperature burns.
- When detecting the output voltage, voltage, and current, do not touch any of the metal contacts of the connector with your hands.
- Please wear gloves when using tools.
- Do not damage the insulation of the cable when testing the cable to avoid the risk of electric shock.

Fault cause: short circuit between the positive and negative poles of the output port.
Solution: The multimeter measures whether the output is short-circuited, if it is short-circuited, please replace the output cable.

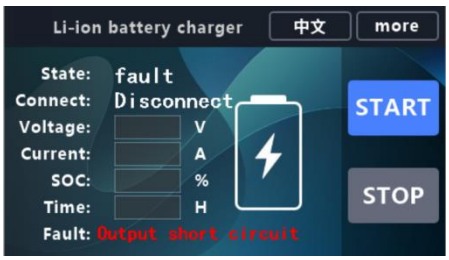

5.2.6 Fault 16: Battery reverse connection fault

⚠DANGER

- The following faults need to be carried out by a professional electrician.
- Before intervening with the charger, disconnect the charger input and output.
- Do not touch the metal surface on the outside of the charger to avoid high temperature burns
- When detecting the output voltage, voltage, and current, do not touch any of the metal contacts of the connector with your hands.
- Please wear gloves when using tools.
- Do not damage the insulation of the cable when testing the cable to avoid the risk of electric shock.

Cause of failure: The cable is reversed to the battery.
Solution: Whether the positive and negative poles of the output terminal of the charging cable are correctly matched with the battery charging terminal, if the connection is reversed, please replace the positive and negative poles of the plug-in.

5.2.7 Fault 17: Over-temperature of Charger

⚠DANGER

- The following faults need to be carried out by a professional electrician.
- Before intervening with the charger, disconnect the charger input and output.
- Do not touch the metal surface on the outside of the charger to avoid high temperature burns.
- Please wear gloves when using tools.

Cause of failure: The temperature of the PCB exceeds the limit value.
Solution: Wait for the PCB to cool down, or use a fan to cool down, and it can operate normally after cooling.

5.2.8 Fault 18: hardware failure

⚠DANGER

- The following faults need to be carried out by a professional electrician.
- Before intervening with the charger, disconnect the charger input and output.
- Do not touch the metal surface on the outside of the charger to avoid high temperature burns.
- Do not touch the power module or PCB directly with your hands.
- After the repair is completed, please refer to 3. 4Cleaning and maintenanc.
- Please wear gloves when using tools.

Cause of failure: The PCB connector is loose, or the wiring is wrong, or the components are damaged.
Solution: Check whether the PCB wiring is loose and whether the wiring is correct, if the above two checks are normal. The PCB needs to be replaced.

Cause of failure: incorrect wiring, loose wiring, or module damaged.
Solution: Check whether the power module wiring is loose, whether the wiring is correct, if wiring checks are no problem, replace the power Module.

5.2.9 Fault 19: Fans Failure

⚠DANGER

- The following faults need to be carried out by a professional electrician.
- Before intervening with the charger, disconnect the charger input and output.
- Do not touch the metal surface on the outside of the charger to avoid high temperature burns.
- Do not touch the power module or PCB directly with your hands.
- After the repair is completed, please refer to 3. 4Cleaning and maintenanc.
- Please wear gloves when using tools.

Cause of failure: The power module fan can not rotate
Solution: Check whether there is an object stuck the fan, if there is no foreign object but it still cannot rotate, replace the power module.

5.2.10 Fault 20: Fans Failure

⚠DANGER

- The following faults need to be carried out by a professional electrician.
- Before intervening with the charger, disconnect the charger input and output.
- Do not touch the metal surface on the outside of the charger to avoid high temperature burns.
- Do not touch the power module or PCB directly with your hands.
- After the repair is completed, please refer to 3. 4Cleaning and maintenanc.
- Please wear gloves when using tools.

Cause of failure: Loose wiring of the relay, or wrong wiring, or damage to the relay.
Solution: Check the relay wiring, if the connection is normal, replace the relay.

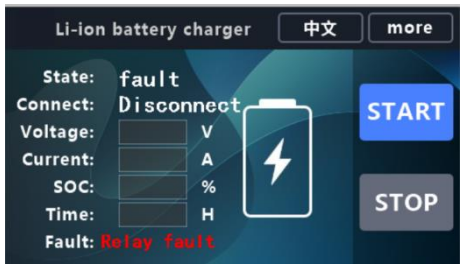

5.2.11 Fault 21: Other Hardware Failure

⚠DANGER

Please disconnect all connections to the charger immediately

Please contact local distributor Claims Assembly

It is strictly forbidden to repair the charger in the following situations

⚠DANGER

The charger burns out

The location fault occurred and the fault code is not in the fault table provided by the local distributor

5.3 Service support

Most of the above situations can be resolved with simple troubleshooting. If it is determined that the issue does not fall into the above category, it may indicate that the charger's hardware is damaged. Customers who meet the after-sales service conditions are kindly requested to contact local distributor in time for hardware replacement.

If you are unable to identify the problem, need to replace the hardware, or need to change the software, please contact local distributor. In this case, remote video communication may be required.

When contacting the local distributor, please provide a detailed description of the problem. For charger fault repairs, please provide charger nameplate information, battery information, and capture CAN communication information during charging if necessary to identify specific problems.

6 Waste disposal

NOTE

Chargers should be collected separately from household or commercial waste and properly recycled or disposed of Take the old charger (if any) in-house for disposal and hand it over to a professional company (professional waste disposal company) In principle, it is also possible to return the old charger to the local distributor. To do so, please contact the local distributor's customer service department. Specific protocols must be adhered to.

According to the European WEEE Directive (2012/19/EU), electrical and electronic equipment must be collected, recycled or professionally disposed of separately from unsorted municipal waste, where pollutants resulting from improper disposal can cause lasting damage to health and the environment.

Detailed information can be obtained at the Waste Disposal Specialist Plant or the relevant authority The packaging of the charger should be disposed of separately. Paper, cardboard and plastic are recycled.

Let's grow together

80V-150A

Lithium battery charger

Operation Manual

V1-07.24
(en-GB)

Foreword

By carefully reading the operating instructions, the user can acquire the necessary technical knowledge to safely operate the charger. The operating instructions contain concise and well organized information sections are arranged alphabetically, and page numbers are numbered.

The company will continue to develop chargers therefore, Manufacturing company must reserve the right to modify the appearance, equipment, and technology. For these reasons, no claims for any device-specific performance may be derived from the contents of these operating instructions.

Safety notices and text mark-ups

Safety instructions and important explanations are indicated by the following graphics:

⚠DANGER

Means that failure to comply can cause risk to life and/or major damage to property.

⚠WARNING

Please strictly adhere to these safety instructions to avoid personal injury or major damage to equipment.

⚠CAUTION

Please pay attention to the important safety instructions.

NOTE

Pay attention to Instruction.

ALL RIGHTS RESERVED

2024.07 01st EDITION

Content

Foreword 1
1 General 2
1.1 Introduction 2
1.2 Important safety tips 3
1.3 Permissable operating conditions 4
1.4 Intended use 4
1.5 Impermissible use 4
1.6 Definition of the person who is used 5
1.6.1 Operator 5
1.6.2 Users 5
1.6.3 Specialist 5
1.6.4 User right,duties and rules of behaviour 5
1.6.5 Operator Rights, Duties and Code of Conduct 5
2 Charger description 6
2.1 Charger appearance 6
2.2 Feature description 6
2.3 Description of how it works 6
2.3.1 Design Principles 6
2.3.2 How it works 7
2.4 Charger parts information 8
2.4.1 AC400V series 8
2.4.2 AC220V series 10
2.4.3 AC600V series 12
2.4.4 AC480V series 14
2.5 Outline drawings 16
2.5.1 AC400V series 16
2.5.2 AC220V series 17
2.5.3 AC600V series 18
2.5.4 AC480V series 20
2.6 Technical data sheets 22
2.6.1 400 Series Charger Technical Parameters 22
2.6.1.1 Charger appearance parameter table 22
2.6.1.2 Electrical performance parameter table 22
2.6.1.3 Electrical function parameter table 23
2.6.1.4 Work environment support 23
2.6.1.5 Safety performance 23
2.6.2 220 Series Charger Technical Parameters 24
2.6.2.1 Charger appearance parameter table 24
2.6.2.2 Electrical performance parameter table 24

2.6.2.3 Electrical function parameter table 25
2.6.2.4 Work environment support 25
2.6.2.5 Safety performance 25
2.6.3 480 Series Charger Technical Parameters 26
2.6.3.1 Charger appearance parameter table 26
2.6.3.2 Electrical performance parameter table 26
2.6.3.3 Electrical function parameter table 27
2.6.3.4 Work environment support 27
2.6.3.5 Safety performance 27
2.6.4 600 Series Charger Technical Parameters 28
2.6.4.1 Charger appearance parameter table 28
2.6.4.2 Electrical performance parameter table 28
2.6.4.3 Electrical function parameter table 29
2.6.4.4 Work environment support 29
2.6.4.5 Safety performance 29
2.7 Model description 30
2.8 Nameplates and logotype 30
2.9 Enforce the standard 31
3 Safety 32
3.1 Safety tips for installation 32
3.1.1 Fire hazard 32
3.1.2 Water ingress risk 32
3.1.3 Stress risk 32
3.1.4 Water ingress risk 32
3.1.5 Installation environmental risks 33
3.1.6 Appearance warning 34
by the character 5957 in accordance with IEC 60417 34
equipment (e.g., protective glasses and gloves) 34
high short-circuit currents The metal part is always live, so do not place foreign objects or tools on the battery Take care to comply with accident prevention regulations such as DIN EN 62485-3. 34
incorrect use will invalidate the product Do not cover the charger in any form during charging In addition, it is necessary to pay attention to the installation instructions 34
local authorized collection and disposal system 34
3.2 Use safety reminders 36
3.2.1 Pre-use safety reminders 36
3.2.2 Run and operate safety reminders 37
3.2.3 Safety reminder after use 37
3.3 Service Safety Reminder 39
3.4 Maintenance safety tips 39
4 operation 40

4.1 Installation 40
4.1.1 Disassemble the box 40
4.1.2 Install an industrial plug or socket 41
4.1.3 Installation of industrial sockets 43
4.1.4 Grid safety devices 44
4.1.5 Install the charger 45
4.2 Operators Daily Checklist 48
4.3 Start the charger 48
4.4 Working status 51
4.5 Running curves 52
4.6 Once the operation is complete 53
4.7 Accessibility 54
4.7.1 The main interface of the charger 54
4.7.2 Battery information inquiry 55
4.7.3 Functional interface 55
4.7.4 Parameter settings 56
4.7.5 Charging record interface 57
4.7.6 Charger information inquiry 58
4.7.7 Warning information query 59
4.7.8 Timed charging function 60
4.7.9 Historical data query 61
5 Description of the fault 62
5.1 Fault table 62
5.2 Simple breakdown repairs 63
5.2.1 BMS series failure 63
5.2.2 Fault 10&11: AC Input Overvoltage 65
5.2.3 Fault 12 AC input phase loss 66
5.2.4 Fault 13&14: Output Overvoltage & Output Overcurrent 66
5.2.5 Fault 15: Output short circuit 67
5.2.6 Fault 16: Battery reverse connection fault 67
5.2.7 Fault 17: Over-temperature of Charger 68
5.2.8 Fault 18: hardware failure 68
5.2.9 Fault 19: Fans Failure 69
5.2.10 Fault 20: Fans Failure 69
5.2.11 Fault 21: Other Hardware Failure 70
5.3 Service support 70
6 Waste disposal 71

1 General

1.1 Introduction

This operating instruction helps the model to use 6 models of chargers at 400V as a reference object to achieve safe operation of charger specifications. Its chargers at 220V, 480V, and 600V still work with
this manual. A 400V type charger is called a charger.

This manual must be readily available and kept in a prepared place This manual is intended for use by all persons who have access to the operating process of the charger, including transportation, installation and installation, operation, maintenance, and disassembly.

In commercial use, in addition to the operating instructions, the relevant guidelines, regulations, and laws in force in the place of use or the country of use should be followed to ensure safe and standardized operations.
Information other than this operating manual is provided by a professional on the part of the local distributor or supplier.

All materials are protected by copyright Without express authorization, it is forbidden to retransmit and reproduce the material and its excerpts, to quote and disseminate its contents.

Obligations and Responsibilities of the User of the Equipment: In this Manual, the term "User" refers to any natural or legal person who directly uses or appoints another person to use the Equipment In special cases such as rental, sale or rental, "Equipment User" represents a party that has specific operational obligations under the terms of the contract concluded between the Owner of the Equipment and the User.

In addition, the user of the equipment must strictly comply with the provisions for the prevention of accidents, other safety technical regulations, and guidelines for the use, maintenance and repair of the equipment The user must ensure that all operators carefully read and fully understand the contents of this manual.

The Company shall not be liable for any damages arising from the improper operation of the equipment by the customer or the user of the equipment or a third party without the permission of the Company's customer service department.

If additional equipment needs to be installed or added, and if it affects or complements the functionality of the equipment, prior written consent must be obtained from the local distributor and, depending on the actual situation, approval from the relevant certification body may also be required.

1.2 Important safety tips

The charger is produced in accordance with EU directives and state-of-the-art technology and provides additional safety tips to ensure the absolute safety of personnel.

⚠DANGER

• The following conditions can result in serious personal and property damage：
• Improper use or incorrect operation.
• Turn on the charger without permission.
• Installation errors or improper maintenance and repairs .
• Replace the input and output wires without permission.
• Charge the damaged battery.

⚠DANGER

Attention must be paid to and all instructions contained in this operating instruction regarding proper use, residual risks, installation, operation, and maintenance.

⚠DANGER

Charging a battery that is not suitable for this charger will cause damage to the charger and battery The battery will swell or burst:
• It can only charge the lithium battery lithium battery for local distributor brand electric industrial forklifts.

⚠WARNING

Dangerous voltage warning
Chargers are electrical devices in which voltage and current can endanger personal safety:
• The charger should only be operated by a trained and authorized professional.
• Before intervening in the charger or working on the charger, the power supply should be disconnected and if necessary, the battery should be disconnected.
• The charger can only be opened and repaired by local distributor Customer Service.

⚠WARNING

Damage or other defects in the charger can lead to accidents
If it is determined that there are safety-related changes, damage, or other defects in the charger or in performance, the charger must not be used until repairs have been carried out in accordance with the Regulations:
• Identified deficiencies must be reported to the local distributor immediately.
• Mark the damaged charger and deactivate it.
• The charger should only be reused after the fault has been identified and troubleshooting.

⚠CAUTION

This charger is not suitable for use by:Persons (including children) with impairments in physical, sensory, or mental abilities, or lack of electrical experience and knowledge system and battery charging unless someone supervises or instructs them in using the charger Be responsible for their safety Children should be supervised to ensure they are not playing with the charger

1.3 Permissable operating conditions

This series of chargers is suitable for charging industrial lithium batteries Any other use of the equipment is non-compliant and may result in injury, damage to the equipment, or other property damage:

- The rated operating input voltage range, frequency range, maximum input current, and input power are all specified in detail on the nameplate .
- The rated working output voltage range, current range, and constant power are all specified in detail on the nameplate.
- Used in industrial environments .
- The permissible temperature range is between -10°C and 45°C .
- Relative humidity is 5%~95%.
- The altitude should not exceed 2000 m .
- Input voltage fluctuation range of ±15% .
- Storage temperature: -20 °C~75 °C.
- Storage humidity 5%~95%.

Note: When the environmental conditions exceed the above range, you should contact us in advance to negotiate and solve.

1.4 Intended use

- Damage and other defects to the charger or accessories must be reported to the supervisor immediately. Chargers and accessories that are not safe to operate should not be used until they have been properly serviced.
- Safety installations and switches may not be removed or rendered unusable. Specified settings may only be changed with the approval of the local distributor.
- The charger must not use more than the limit set by the local distributor, and the fluctuation range
  must not exceed ±15%.
- Warning signs need to be added to the charger working area.
- In order to maintain LVD compliance with EMC, any replacement of exterior parts requires prior contact with the local distributor.
- When using the utility grid, the regulations must be followed, as well as country-specific restrictions for winter.

1.5 Impermissible use

- If the charger is used in a way that is not permitted, the user, not the local distributor, is responsible. The following list is for informational purposes only and is not intended to be exhaustive:
- Charge commercial batteries.
- Charge non-local distributor brand batteries.
- Modify or destroy safety devices.
- Modification or replacement of unauthorized parts.
- Extend or shorten the AC/DC end cable.
- The usage environment is beyond the scope of Section 1.3.
- Personnel have not undergone safety training or have not consulted the instructions for operation.

1.6 Definition of the person who is used

1.6.1 Operator

The charger should only be operated by a person who is at least 18 years of age, has been trained in electrical safety and operational safety, and who demonstrates their basic electrical skills to the user or an authorized representative. It is also necessary to have a specific understanding of the working logic of the charger to be used.

1.6.2 Users

The user is the natural person or legal entity responsible for pumping the charger. Users can operate the charger themselves or delegate the task of operating the charger to someone else, such as an operator. In the case of specific cases such as rentals, the liability is borne by the user in accordance with a valid contract between the owner of the car and the operator of the charger.

1.6.3 Specialist

A qualified person is defined as a service engineer or a person who meets the following requirements:

- Full professional qualifications that demonstrate their expertise. The certificate should include a professional qualification or similar document.
- Professional experience shows that the qualified person has gained hands-on experience with the charger during their career During this time, the person has become familiar with the various symptoms that need to be examined, such as based on the results of hazard assessments or routine inspections.
- Recent professional involvement in the field of relevant charger testing or R&D and appropriate further qualification is essential. Qualified personnel must have experience in conducting relevant tests or conducting similar tests.
- In addition, the person must be aware of the latest technological developments and the risks being assessed for the charger to be made.

1.6.4 User right,duties and rules of behaviour

Everyone operating the charger has read and understood this manual and has been approved with the relevant charger operator training. Operate the charger in a safe manner so as not to endanger the life and health of the operator and/or others. Follow all warnings and instructions in this manual This manual is available for use by the operator.

1.6.5 Operator Rights, Duties and Code of Conduct

For the purposes of these operating instructions, the operating company is defined as any natural or legal person who uses the charger on its own or on its behalf. In exceptional cases (e.g. lease or rental).

The operating company is considered to be a person who performs specific operational duties under an existing contractual agreement between the charger owner and the operator.

The operating company must ensure that the charger is used only for its intended purpose and to prevent danger to the health and safety of the operator and third parties. In addition, accident prevention regulations, safety regulations, and operation, maintenance, and repair guidelines must be complied with. The operating company must ensure that all operators have read and understood these operating instruction

2 Charger description

2.1 Charger appearance

2.2 Feature description

The stationary-type charger, characterized by its small size and high conversion efficiency, is equipped with a smart touch screen. Users can set voltage and current on the screen, view charging records, make charging reservations, and switch between different languages. It also features power-off compensation and fault indication lights, making the charging status clear at a glance. The charger adopts forced air cooling for cooling, with functions including input overvoltage, undervoltage protection, output overvoltage, undervoltage, overcurrent, output short circuit, and fan failure protection etc.

2.3 Description of how it works

2.3.1 Design Principles

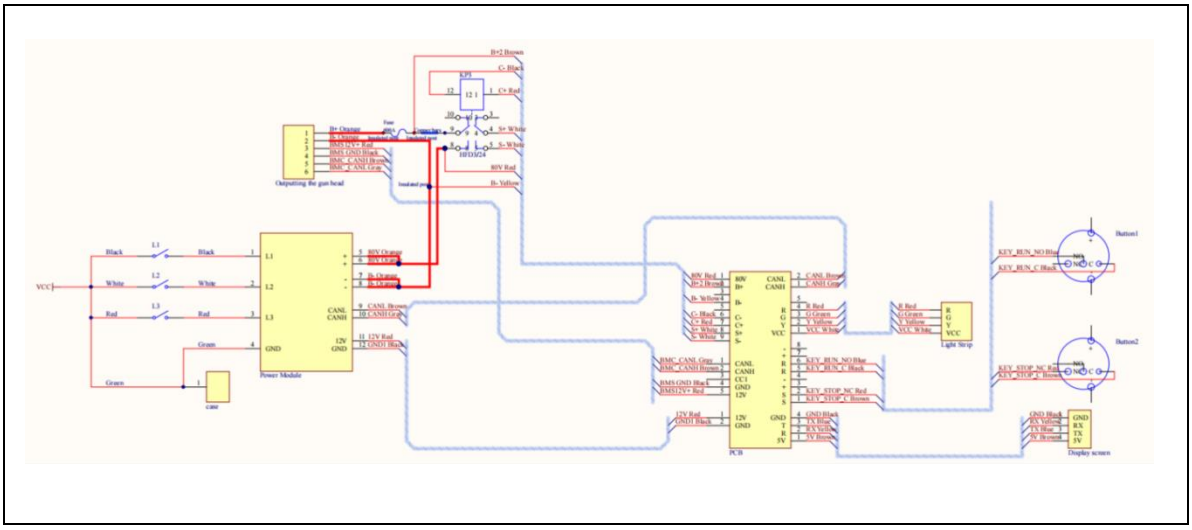

2.3.2 How it works

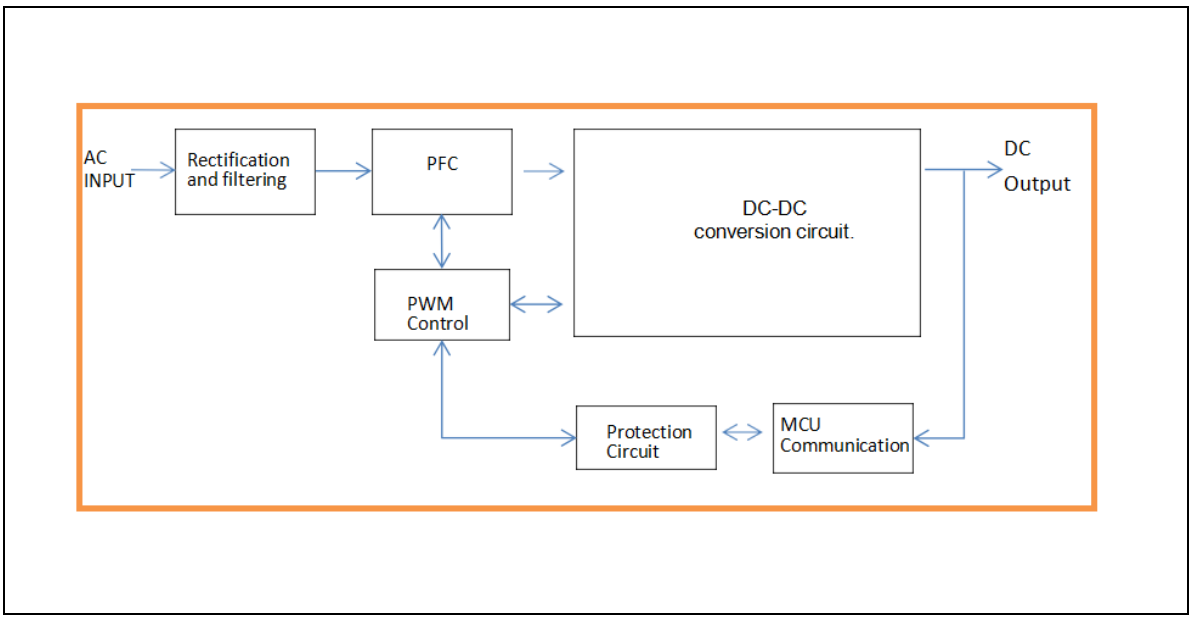

The implementation principle of the high-frequency PFC (Power Factor Correction) module charger generally follows these steps:

Input current rectification: Firstly, the AC input power is rectified into a DC power source.
High-frequency conversion: The DC power source is converted into a high-frequency AC power source, typically achieved through high-frequency switching power supplies using devices such as MOSFETs.
PFC control: The PFC controller monitors the input current and voltage and controls the high-frequency switch to minimize the phase difference between the input current and voltage, thereby maximizing the power factor.

DC-DC conversion: The power source, after power factor correction, enters a DC-DC converter to convert the high-frequency AC power into the desired DC voltage. This typically involves an inductor, a capacitor, a switching element (such as a MOSFET), and control circuitry.

Control and protection: The charger also includes control and protection circuits to ensure that the output voltage and current are within safe ranges and to monitor various conditions during the charging process, such as overvoltage, overcurrent, overtemperature, etc., and take appropriate measures to protect the charger and battery.

Note: The above instructions apply to all chargers under the 220, 400, 480, and 600 models Technical parameters.

2.4 Charger parts information

2.4.1 AC400V series

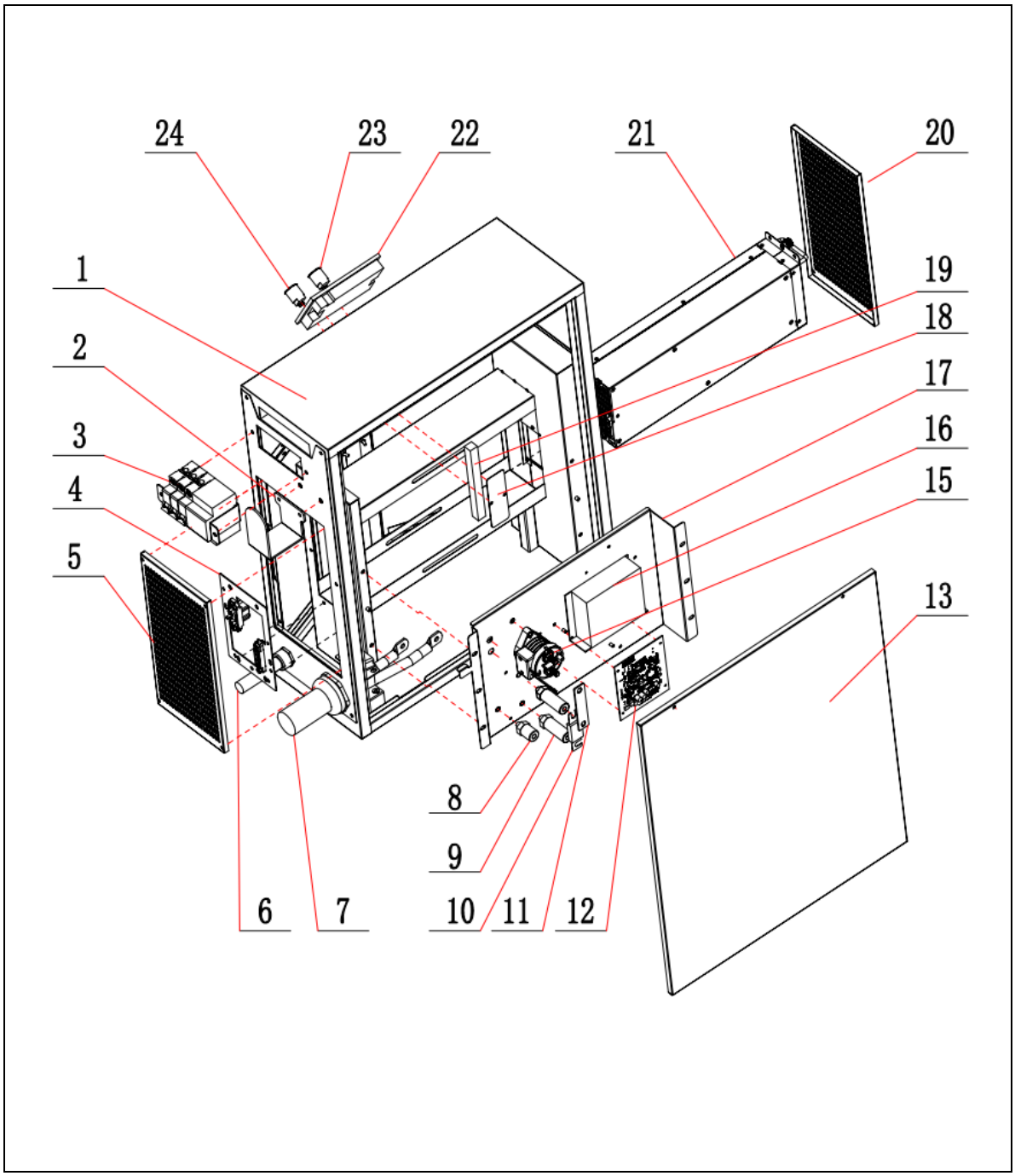

Applicable Models	FST-Li-80V150A-400

No.	NAME	DRAWING NO./SPECIFICATION	QTY
1	BZ-06 Case	FST-BZ-06	1
2	Hook	FST-LI2-06	1
3	Breaker	CHNT	1
4	Rear Adapter Plate		1
5	Left Side Plate		1
6	Input Cable		1
7	Output Cable（Option one）	REMA320A	1
8	Black Insulating Column	30mm with M8 Stud length 9mm	1
9	Red Insulating Column	55mm with M8 Stud length10mm	2
10	Fuse	600A	1
11	Copper Strip((nickel plated)	Hole pitch 72, hole φ8	1
12	PCB		1
13	Back Plate	FST-LI2-05	1
15	DC Relay	ZXEV01-200F-A	1
16	Switching Power Supply	380V to 12V5A ((Partial model charger have it))	1
17	Mount Plate	FST-LI2-08	1
18	Light strip pressure plate	FST-LI2-09	1
19	LED Light Strip	15cm	1
20	Right Side Plate		1
21	Power Module（Option one）	80V150A 80V200A 100-20000 Module	1
22	HMI	TJC4827X343-011R-Y-Z03	1
23	Start Button	12-24VG without cable	1
24	Stop Button	12-24VG without cable	1

2.4.2 AC220V series

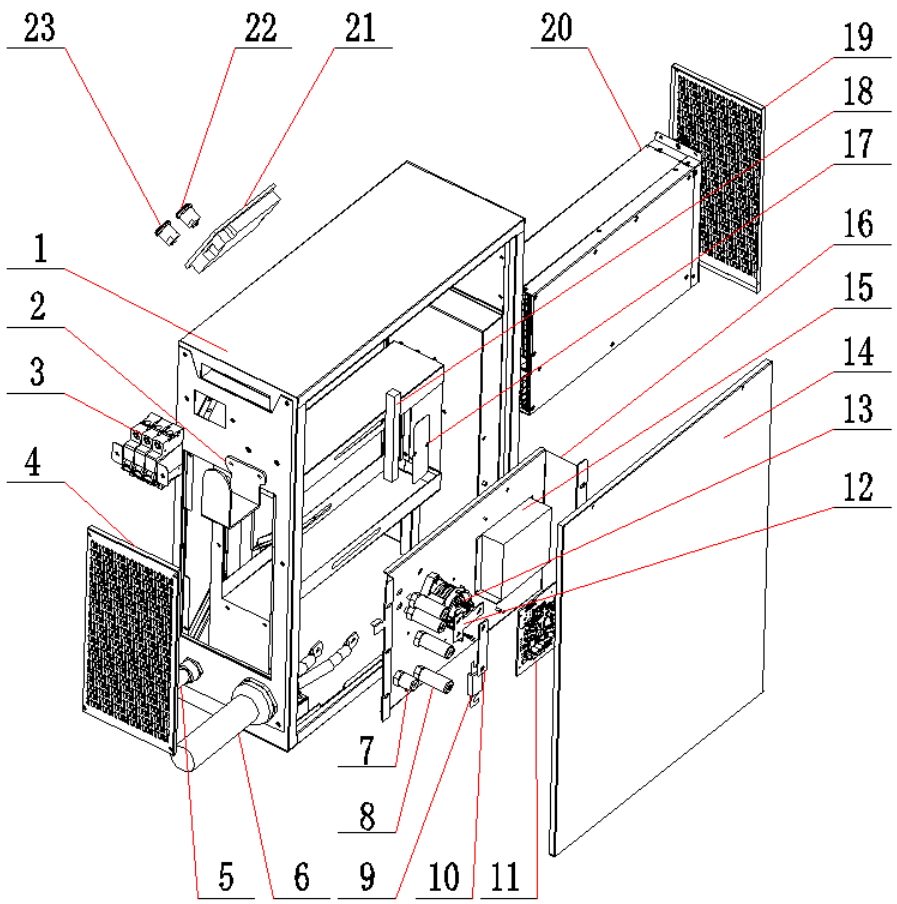

Applicable Models	FST-Li-80V150A-220V3P

No.	NAME	DRAWING NO./SPECIFICATION	QTY
1	BZ-02 Case	FST-BZ-02	1
2	Hook	FST-LI2-06	1
3	Breaker	CHNT	1
4	Left Side Plate		1
5	Input Cable		1
6	Output Cable（Option one）	REMA320A	1
7	Black Insulating Column	30mm withM8 Stud length 9mm	1
8	Red Insulating Column	55mm withM8 Stud length10mm	1
9	Fuse	600A UL	2
10	Copper Strip((nickel plated)	Hole pitch 72, hole φ8	1
11	PCB		1
12	20KW Copper Strip	2mm thickness	1
13	Relay	ZXEV01-200F-A	1
14	Back Plate	FST-LI2-05	1
15	Switching Power Supply	220V to 12V	1
16	Mount Plate	FST-LI2-08	1
17	Light strip pressure plate	FST-LI2-09	1
18	LED Light Strip	15cm	1
19	Right Side Plate		1
20	Power Module（Option one）	100-11000 (80V100A 80V150A)	1
21	HMI	TJC4827X343-011R-Y-Z03	1
22	Start Button	12-24VG without cable	1

2.4.3 AC600V series

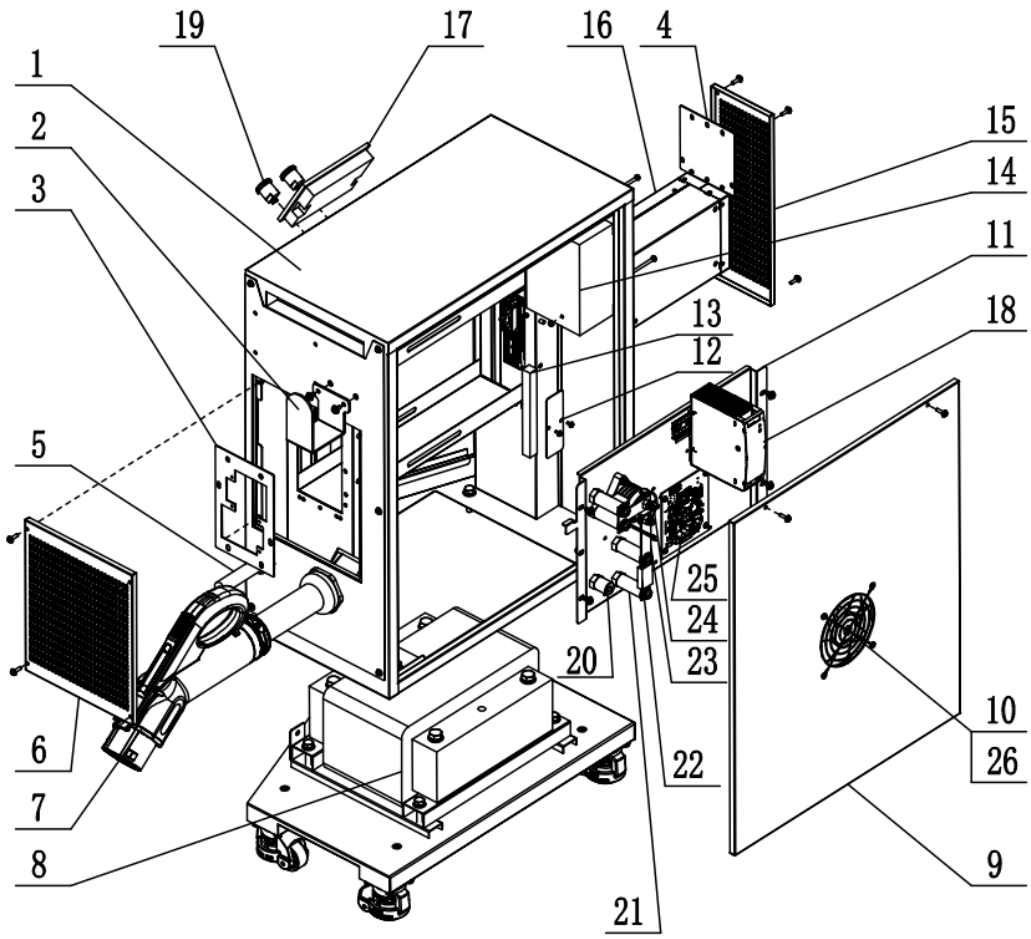

Applicable Models	FST-Li-80V150A-600

No.	NAME	DRAWING NO./SPECIFICATION	QTY
1	BYQ Case	BYQ-BYQ	1
2	Hook	FST-LI2-06	1
3	BZ-Power Module Rear Adapter Plate		1
4	BZ-Power Module Front Adapter Plate		1
5	SR342.5T.3.M Input Cable-B		1
6	Left Side Plate		1
7	Output Cable (Option one)	REMA320A	1
8	Three-phase Auto-transformer		1
9	Back Plate	With fan hole	2
10	Fan Grille	120*120	1
11	Mounting Plate		1
12	Light Strip Pressure Plate	FST-LI2-09	1
13	LED Light Strip	15CM	1
14	Breaker	Schneider	1
15	Right Side Plate (with filter)		1
16	Power Module	80V150A 100-20000 Module	1
17	HMI	TJC4827X343-011R-Y-Z03，Frosted	1
18	Rail Power Supply	Partial model charger have it	1
19	Round Switch	12-24VG(without cable)	1
20	Black Insulating Column	30mm with M8 stud length 9mm	1
21	Red Insulating Column	55mm with M8 stud 10mm long	1
22	Fuse	600A UL certified	1
23	Copper Strip	Hole pitch 72, hole ø8	1
24	DC Relay	ZXEV01-200F-A	1
25	PCB		1
26	Fan DC12V	120*120*25mm	1

2.4.4 AC480V series

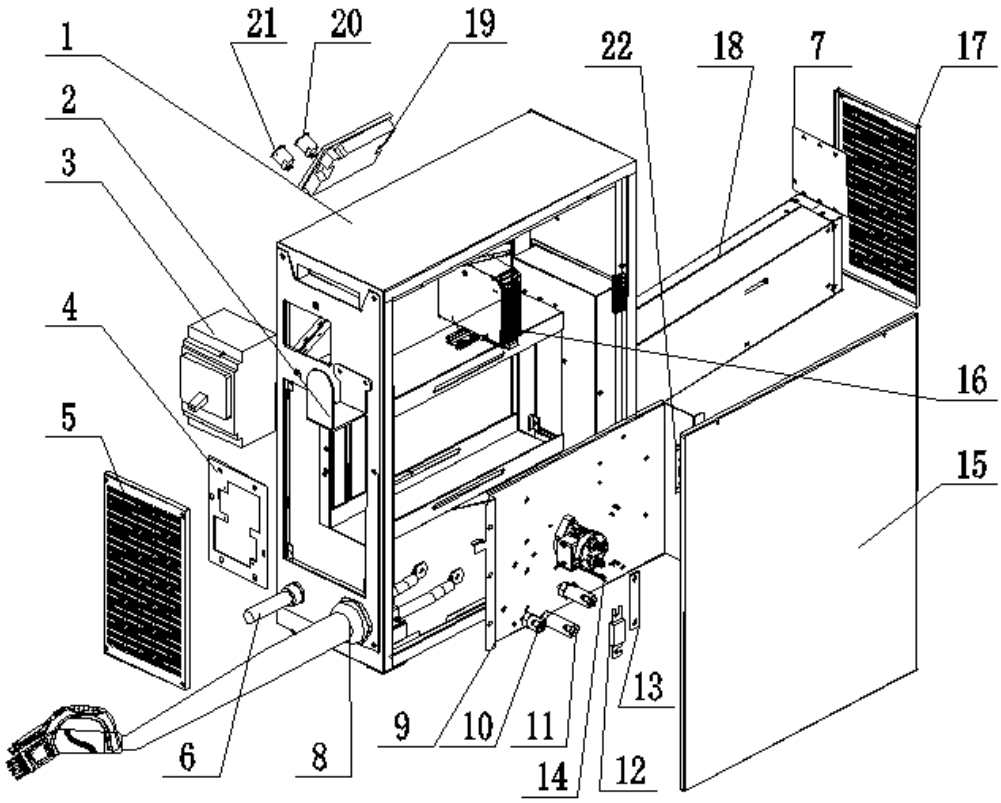

Applicable Models	FST-Li-80V150A-480

No.	NAME	DRAWING NO./SPECIFICATION	QTY
1	Case	Standard	1
2	Hook	FST-LI2-06	1
3	Breaker	Nader	1
4	Connector Mount Plate A		1
5	Left Side Plate		1
6	Input Cable		1
7	Connector Mount Plate B		1
8	Output Cable（Option one）	REMA320A	1
9	Mount Plate		2
10	Black Insulating Column	30mmwithM8 Stud length10mm	1
11	Red Insulating Column	55mmwithM8 Stud length10mm	1
12	Fuse	600A UL Certification	1
13	Copper Strip	Hole pitch 72, hole φ8	1
14	DC Relay	ZXEV01-200F-A	1
15	Back Plate		1
16	Rail Power Supply	Partial model charger have it	1
17	Right Side Plate		1
18	Power Module（Option one）	80V150A 100-20000 Module	1
19	HMI	TJC4827X343-011R-Y-Z03，Frosted	1
20	Start Button	12-24VG without cable	1
21	Stop Button	12-24VG without cable	1

2.5 Outline drawings

2.5.1 AC400V series

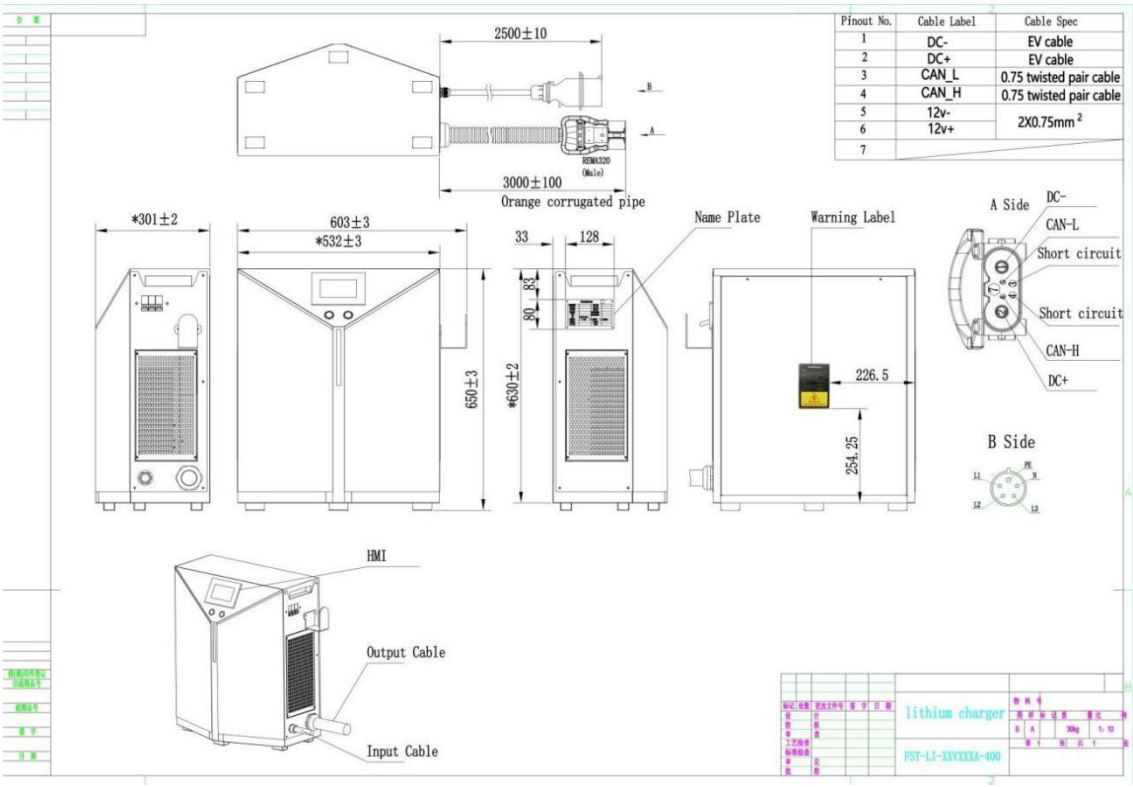

Applicable Models	FST-Li-80V150A-480

NOTE: ALL STANDARD SIZES ARE IN MM

2.5.2 AC220V series

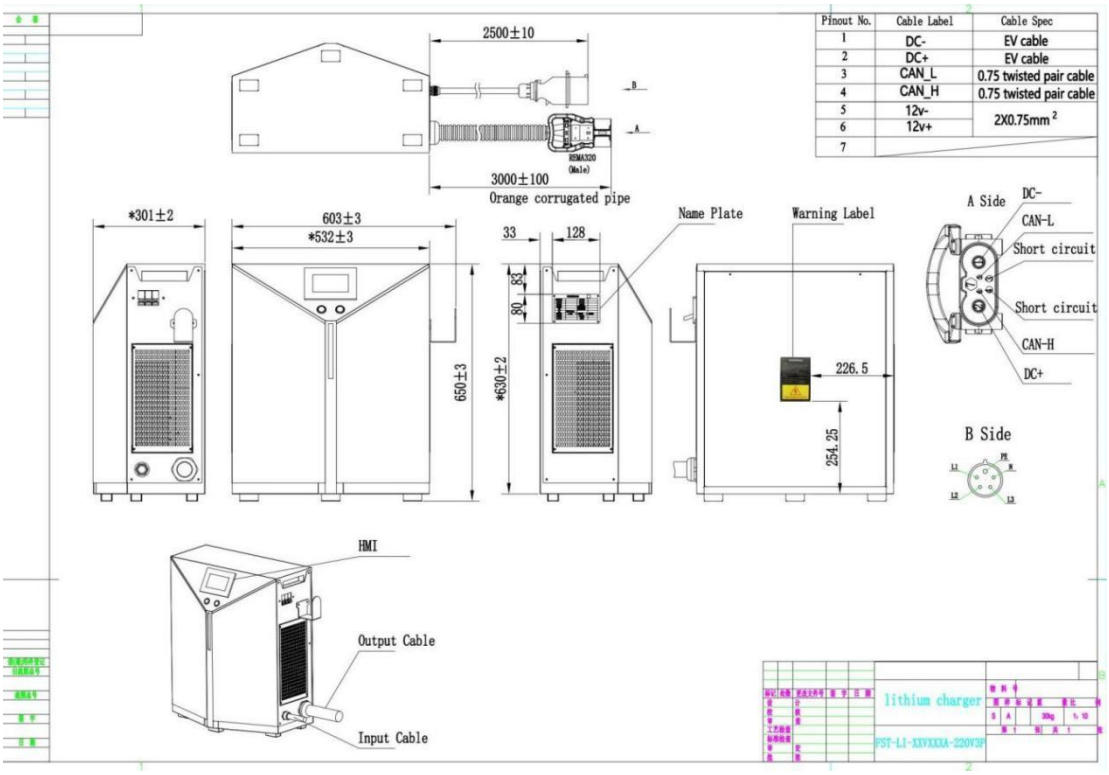

Applicable Models	FST-Li-80V150A-220V3P

NOTE: ALL STANDARD SIZES ARE IN MM

2.5.3 AC600V series

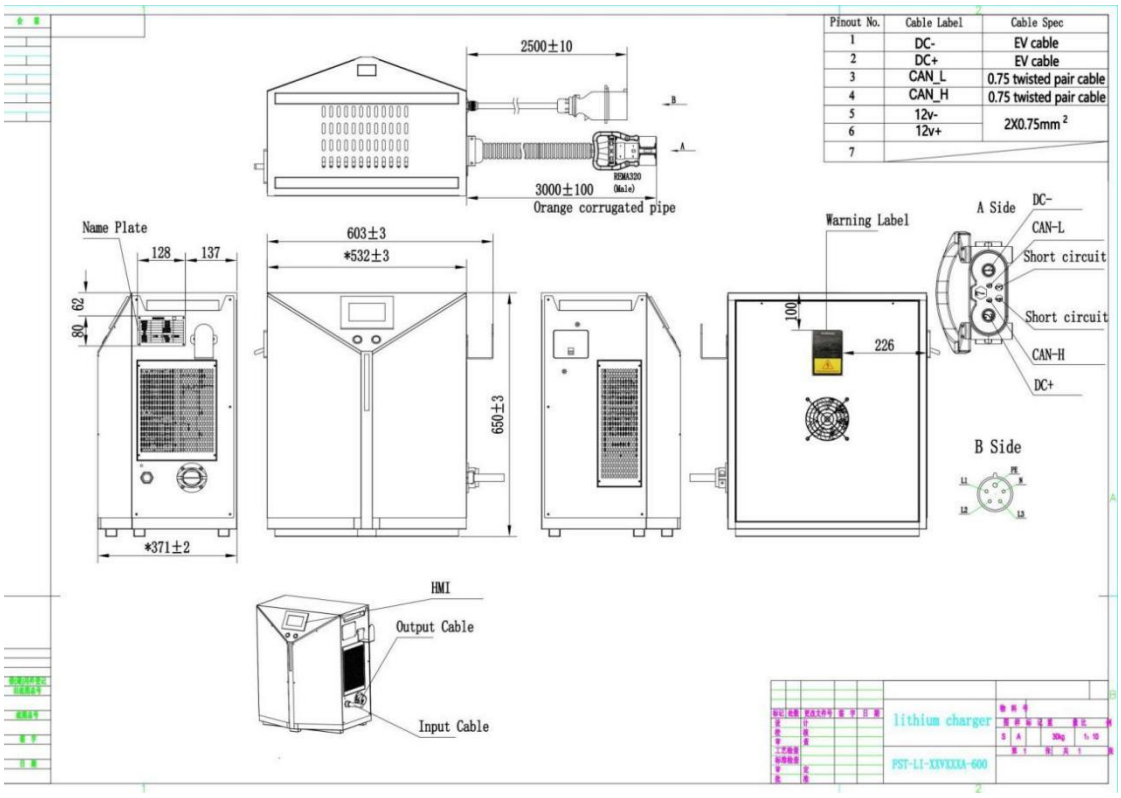

Applicable Models	FST-Li-80V150A-600

NOTE: ALL STANDARD SIZES ARE IN MM

2.5.4 AC480V series

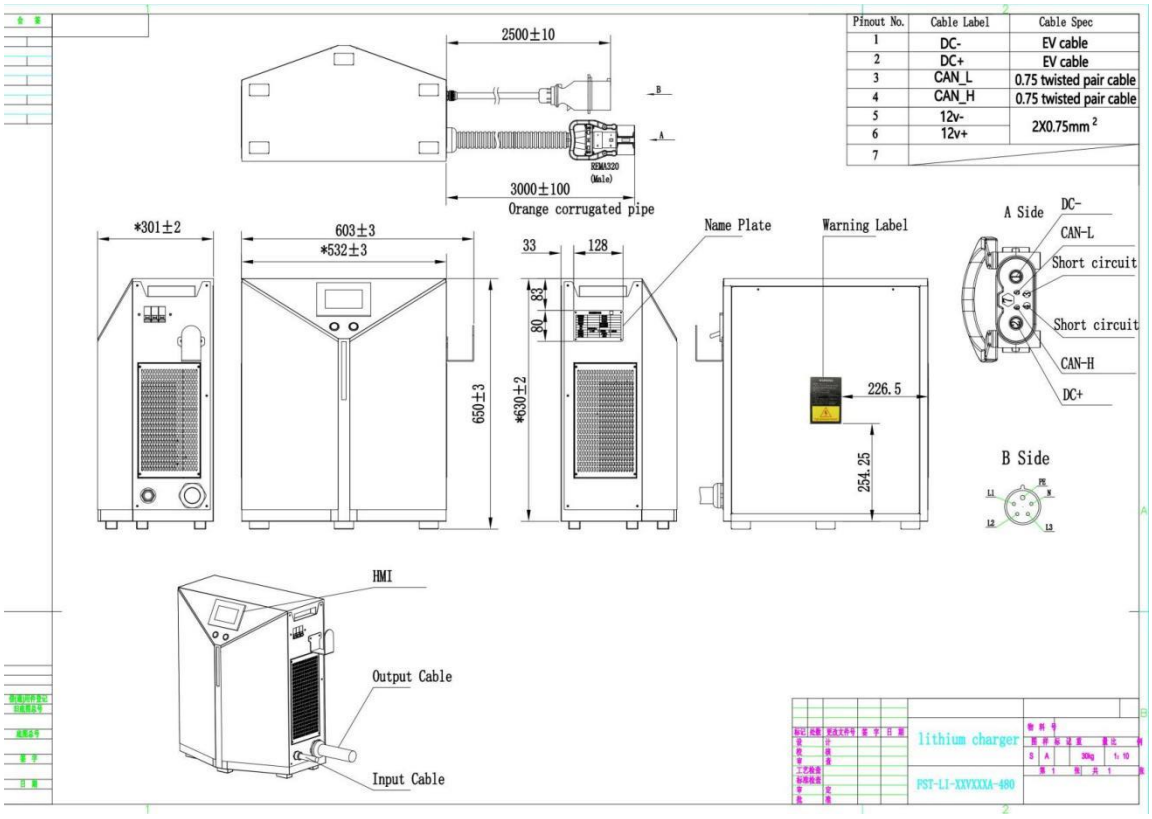

Applicable Models	FST-Li-80V150A-480

NOTE: ALL STANDARD SIZES ARE IN MM

2.6 Technical data sheets

2.6.1 400 Series Charger Technical Parameters

2.6.1.1 Charger appearance parameter table

Name Model	80V 150A
volume (mm)	L:532 W:301 H:650
WEIGHT (KG)	35
AC input（plug）	32
DC output	320
Enter the wire（mm²）	3*6 2*4
Output wires（mm²）	2*50
IP rating	20

2.6.1.2 Electrical performance parameter table

Name Model	80V 150A
Input Voltage (AC)	320-500
Input current Max（A）	30
Input current Rated（A）	27
Operating frequency（hz）	45-65
Input power（KW）	15
Output voltage（DC）	80
Output current（A）	150
Output power（KW）	12
Power factor（PF）	0.99
Operating noise（db）	≤55

2.6.1.3 Electrical function parameter table

Name Model	80V 150A
Phase-loss protection	V
Input undervoltage protection	V
Input overvoltage protection	V
Output undervoltage protection	V
Output overvoltage protection	V
Input overcurrent protection	V
Short-circuit protection	V
Reversepolarity protection	V

2.6.1.4 Work environment support

Name Model	80V 150A
Voltage adaptive（%）	±15
Work Scenario	indoor
Operating temperature（℃）	-20-50
Operating humidity（g/m³）	10-90
elevation（*m）	2000
Dust level	IP20

2.6.1.5 Safety performance

Name Model	80V 150A
Leakage current（ma）	＜10
Ground resistance（Ω）	＜0.1
Transient over-voltages（V）	50
Insulation resistance(Ω)	＞50M
Insulation withstand voltage	3000

2.6.2 220 Series Charger Technical Parameters

2.6.2.1 Charger appearance parameter table

Name Model	80V 150A
volume (mm)	L:532 W:301 H:810
WEIGHT (KG)	35
AC input（plug）	63
DC output	320
Enter the wire（mm²）	3*10 2*4
Output wires（mm²）	2*50
IP rating	20

2.6.2.2 Electrical performance parameter table

Name Model	80V 150A
Input Voltage (AC)	220
Input current Max（A）	48
Input current Rated（A）	39
Operating frequency（hz）	45-65
Input power（KW）	15
Output voltage（DC）	80
Output current（A）	150
Output power（KW）	12
Power factor（PF）	0.99
Operating noise（db）	≤55

2.6.2.3 Electrical function parameter table

Name Model	80V 150A
Phase-loss protection	V
Input undervoltage protection	V
Input overvoltage protection	V
Output undervoltage protection	V
Output overvoltage protection	V
Input overcurrent protection	V
Short-circuit protection	V
Reversepolarity protection	V

2.6.2.4 Work environment support

Name Model	80V 150A
Voltage adaptive（%）	±15
Work Scenario	indoor
Operating temperature（℃）	-20-50
Operating humidity（g/m³）	10-90
elevation（*m）	2000
Dust level	IP20

2.6.2.5 Safety performance

Name Model	80V 150A
Leakage current（ma）	＜10
Ground resistance（Ω）	＜0.1
Transient over-voltages（V）	50
Insulation resistance(Ω)	＞50M
Insulation withstand voltage	3000

2.6.3 480 Series Charger Technical Parameters

2.6.3.1 Charger appearance parameter table

Name Model	80V 150A
volume (mm)	L:532 W:301 H:650
WEIGHT (KG)	35
AC input（plug）	32
DC output	320
Enter the wire（mm²）	3*6 2*4
Output wires（mm²）	2*50
IP rating	20

2.6.3.2 Electrical performance parameter table

Name Model	80V 150A
Input Voltage (AC)	480
Input current Max（A）	30
Input current Rated（A）	18
Operating frequency（hz）	45-65
Input power（KW）	15
Output voltage（DC）	80
Output current（A）	150
Output power（KW）	12
Power factor（PF）	0.99
Operating noise（db）	≤55

2.6.3.3 Electrical function parameter table

Name Model	80V 150A
Phase-loss protection	V
Input undervoltage protection	V
Input overvoltage protection	V
Output undervoltage protection	V
Output overvoltage protection	V
Input overcurrent protection	V
Short-circuit protection	V
Reversepolarity protection	V

2.6.3.4 Work environment support

Name Model	80V 150A
Voltage adaptive（%）	±15
Work Scenario	indoor
Operating temperature（℃）	-20-50
Operating humidity（g/m³）	10-90
elevation（*m）	2000
Dust level	IP20

2.6.3.5 Safety performance

Name Model	80V 150A
Leakage current（ma）	＜10
Ground resistance（Ω）	＜0.1
Transient over-voltages（V）	50
Insulation resistance(Ω)	＞50M
Insulation withstand voltage	3000

2.6.4 600 Series Charger Technical Parameters

2.6.4.1 Charger appearance parameter table

Name Model	80V 150A
volume (mm)	L:532 W:371 H:650
WEIGHT (KG)	90
AC input（plug）	32
DC output	320
Enter the wire（mm²）	3*6 2*4
Output wires（mm²）	2*50
IP rating	20

2.6.4.2 Electrical performance parameter table

Name Model	80V 150A
Input Voltage (AC)	600
Input current Max（A）	30
Input current Rated（A）	14
Operating frequency（hz）	45-65
Input power（KW）	15
Output voltage（DC）	80
Output current（A）	150
Output power（KW）	12
Power factor（PF）	0.99
Operating noise（db）	≤55

2.6.4.3 Electrical function parameter table

Name Model	80V 150A
Phase-loss protection	V
Input undervoltage protection	V
Input overvoltage protection	V
Output undervoltage protection	V
Output overvoltage protection	V
Input overcurrent protection	V
Short-circuit protection	V
Reversepolarity protection	V

2.6.4.4 Work environment support

Name Model	80V 150A
Voltage adaptive（%）	±15
Work Scenario	indoor
Operating temperature（℃）	-20-50
Operating humidity（g/m³）	10-90
elevation（*m）	2000
Dust level	IP20

2.6.4.5 Safety performance

Name Model	80V 150A
Leakage current（ma）	＜10
Ground resistance（Ω）	＜0.1
Transient over-voltages（V）	50
Insulation resistance(Ω)	＞50M
Insulation withstand voltage	3000

2.7 Model description

Take model FST-Li-80V150A-XXX as an example:
The "XXX" part indicates the suffix of the input voltage.
For example, FST-Li-80V150A-400 indicates that the input is a three-phase 400V voltage.
If it is FST-Li-80V150A-480, the input voltage is three-phase 480V. Three-phase 400V and 600V ditto.
FST-Li-80V150A-XXX:
If the rated input voltage is three-phase 400V: FST-Li-80V150A-400
If the rated input voltage is three-phase 480V: FST-Li-80V150A-480
If the rated input voltage is three-phase 220V: FST-Li-80V150A-220V3P
If the rated input voltage is three-phase 600V: FST-Li-80V150A-600
The following models can be described above:
FST-Li-80V150A-XXX:

2.8 Nameplates and logotype

Lithium Intelligent Charger	
Model: FST-Li-80V150A-400	
Input: 400V∼, 3P+PE, 50/60Hz, 30A Max.	
Input voltage range：320V-480∼	
Output: 60-100V⎓, 150A Max., 15KW Max.	
Protective class I	
IP20	
Weight:	
Serial Number:	Manufacture Date:

2.9 Enforce the standard

The charger is designed and manufactured in accordance with the technical specifications that have obtained the following technical certifications Therefore, when used correctly, it does not pose a threat to the safety and health of operators or third parties.
The charger is CE marked The necessary isolation spacing must be observed All circuits use primary and secondary protection devices, which are protected by a set current intensity and trigger characteristics.
All live components are supplied with a casing or a cover that can only be loosened with a tool All cables and plugs are shielded and grounded as specified The charger is designed in accordance with protection class IP 20.
All metal parts are grounded by a ground wire system.
The charger is equipped with a CAN safety function that prevents the battery from overcharging by means of information recognition.

Standard table

serial number	Standard number	Standard name
1	IEC EN 62477	Safety requirements for power electronic converter systems and equipment –Part 1: General
2	IEC 60512-6-4:2002	Dynamic stress test
3	IEC 68-2-27	Impact test
4	IEC 61000-4-2	Electromagnetic Compatibility Test & Measurement Technology Electrostatic Discharge Immunity Test
5	IEC 61000-4-3	Electromagnetic Compatibility Test & Measurement Technology RF Electromagnetic Field Radiated Immunity Test
6	IEC 61000-4-4	Electromagnetic Compatibility Test and Measurement Technology Electrical Fast Transient Burst Immunity Test
7	IEC 61000-4-5	Electromagnetic Compatibility Test & Measurement Technology Surge (Shock) Immunity Test
8	IEC 61000-4-6	Electromagnetic Compatibility Test & Measurement Technology RF field-induced immunity to conducted disturbances
9	IEC 61000-4-11	Electromagnetic compatibility test and measurement technology voltage
10	IEC 61000-6-2	Common Criteria - Immunity to Industrial Environments
11	IEC 61000-6-4	General Criteria - Emission standards for industrial environments
12	IEC 60529:2001	Enclosure rating
13	EN 50699	Recurrent Tests of Electrical Equipment
14	UL1564	Industrial battery chargers
15	CSA-C22.2 no.107.2-01	battery chargers
17	CEC-400-2017-002	2016 APPLIANCE EFFICIENCY REGULATIONS
18	FCC part 15	part15-radio frequency devices

3 Safety

3.1 Safety tips for installation

3.1.1 Fire hazard

⚠DANGER

- There must be no flammable materials near the charger Included shipping and packaging materials are included:
- There must be no flammable materials within 2.5 m of the charger.
- The horizontal distance between the charger and the combustible material is at least 2.5 m It is forbidden to store flammable materials (e g on shelves) above the charger or to use flammable building materials The distance from areas with a risk of fire, explosion and explosives must be at least 5 m .

3.1.2 Water ingress risk

⚠DANGER

There must not be any liquid in the vicinity of the charger.
Do not place any liquid on top of the charger.

3.1.3 Stress risk

⚠DANGER

- Avoid the charger exceeding the stress level and do not place anything on top of the charger.
- Electrical installation according to uniform regulations (wire cross-sections, safety devices, ground connections)Avoid the input and output stress of the charger exceeding the range, and do not modify any parameters of the cable (including length, wire diameter, voltage carrying range, etc.) without the authorization of the local distributor.Before electrical installation, please check the parameters on the nameplate (voltage/frequency/current, etc.) and compare them with the performance parameters of the power connector. Prevent the charger from ultra-high stress ranges (voltage, frequency, and current) by connecting the grid safety device in series.

3.1.4 Water ingress risk

⚠DANGER

- Missing or improperly designed leakage protection devices can lead to a risk of electric shock and fire .
- Missing or poorly designed residual current protection devices can cause fatal injuries by causing electric shock or fire in the event of a malfunction necessary, use Type B or B+RCD (Residual Current Device, RCD).
- In order to operate the charger, the location of use must have a grid interface The supply voltage and frequency must match the instructions on the rating plate (see the section "Identification and Labeling on the Charger") As specified, grid interfaces must be properly grounded .
- The charger must be protected from excessive contact voltages according to the regulations of the local power supply unit (EVU) .
- If the power cord of the charger is damaged, it must be replaced by the local distributor or its customer service department or appropriate qualified personnel to avoid danger.

3.1.5 Installation environmental risks

⚠WARNING

- The side distance to the next charger is at least twice the width of the charger If the spacing to the next charger cannot be respected, the chargers need to be staggered.
- Please install the charger in a vertical position, and there are no foreign objects around the fan to prevent the fan from getting foreign objects inside the charger when working Do not allow horizontal installation.
- Maintain a minimum lateral distance of 0,5 m from the next wall.
- Do not install this charger in a commercial environment.
- Fire extinguishing equipment must be prepared around the charger.
- Ensure optimal ventilation of the charger：
- When installing/installing the charger, you should pay attention to:
  - No corrosive gases, e g acid gases,
  - No conductive dust, such as soot or metal dust,
  - No excessive non-conductive dust is deposited,
  - No water should enter the inside of the charger
- Pay attention and comply with the regulations set by the battery local distributor.
- In addition to the restrictions on the choice of installation site mentioned in this operating instruction national regulations must be observed.

3.1.6 Appearance warning

⚠WARNING

The charger has an IP 20 degree of protection against Moisture Ingress and is specially designed for indoor use This is identified by the character 5957 in accordance with IEC 60417.	
Please read the operating instructions carefully before use The work of the battery and charger should only be carried out by a professional following instructions The operating instructions must be placed in a prominent location and easily accessible.	
Avoid open flames or open ignition sources near the battery or charger,and do not smoke.	
Make sure there is adequate ventilation in the chargingarea and do not disconnect. Note:Dirty batteries or chargers require personal protective equipment (e.g., protective glasses and gloves).	
If your charger is not working poperly,you will face many dangers Such as electrical hazards due to mains currents or hazards due to Other causes should be repaired immediately by an authorized Professional. note: high-performance lithium-ion batteries generate extremely high short-circuit currents The metal part is always live, so do not place foreign objects or tools on the battery Take care to comply with accident prevention regulations such as DIN EN 62485-3.	
Pay attention to the correct use of the charger as prescribed Otherwise it may lead to greater danger Unprofessiona l or incorrect use will invalidate the product Do not cover the charger in any form during charging In addition, it is necessary to pay attention to the installation instructions	
Used chargers are hazardous waste and require special disposal Do not dispose of this product in household waste In accordance with the European WEEE Directive 2012/19/EU on waste electrical and electronic equipment (which has been transposed into national law) used power tools must be collected separately and recycled in an environmentally friendly manner Be sure to return your used charger to the dealer or get information about your local authorized collection and disposal system	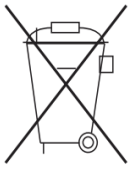

3.2 Use safety reminders

3.2.1 Pre-use safety reminders

⚠DANGER

- Check before each use of the charger.
- The space for forklift charging should be kept fully ventilated.
- There is no clogging of the fan and no foreign objects around None of the vents were blocked Within a radius of at least 2,5 m around the forklift that needs to be charged, flammable materials and work equipment that could generate sparks must not be placed.
- There are no flammable, explosive, or combustible materials, chemicals, flammable vapors, and other dangerous items in the vicinity of the charger.
- Ensure that the available space around the battery charger is sufficient to provide adequate ventilation and easy access to the cable socket .
- Make sure the charger is not in the environment where any liquid gets in, and do not pour liquid into the charging case or place it on top of the charger.
- Confirm that nothing has been placed on the output cable and input power cord or place it where you can step on it.
- Confirm that there are no defects, cracks, worn, or exposed copper wires inside the output plug and cable, and that the charging output plug is clean and dry, and that there are no dirt, iron filings and other foreign objects inside, and that the cable is not entangled with any items, and that there are no knots.
- Make sure the input and output cables are not scattered and tangled, people may get entangled or trip over the scattered and surrounded cables.
- Confirm that the input plug and wire are free of defects, cracks, wear, or exposed copper wires inside the cable, and that the charging input plug is clean and dry, and that the metal contacts are free of dirt, iron filings and other foreign objects, and that the metal contacts are in a shiny state.
- Whether the grid interface is intact .
- Whether the enclosure is intact or not .

3.2.2 Run and operate safety reminders

⚠DANGER

- Before connecting the output, make sure that there is no fault information on the charger display Interface.
- Do not connect batteries that cannot be charged.
- Do not connect any commercial batteries.
- Do not connect any lead-acid batteries.
- It is forbidden to smoke or use an open flame around the battery.
- Make sure that liquid does not flow into the inside of the charger.
- Before connecting the battery, it is essential to check and follow the instructions on the rating. voltage of the allowable battery voltage (see the "Identification and Labeling on the Charger" section) Place the battery in front of or next to the charger so that the battery plug is within the operating distance of the charger's charging cable (standard 2,5 m).
- The relevant safety regulations of the local distributor of the battery and the charging station must be strictly followed.
- The charger input and output cables can only be connected or unplugged when the charger and forklift are turned off.
- If the charging process is interrupted by unplugging it, there is a risk of personal injury The resulting spark can ignite the charging gas formed during charging, which can cause a fire or explosion.

- For chargers whose charging procedures can be changed subsequently, the operator is obliged to record the applicable battery type on the housing.
- If it is determined that there are safety-related changes, damage, or other defects in the charger or in performance, the charger must not be used until repairs have been carried out in accordance with the regulations.
- If you find any damage, you can immediately feedback with the local distributor.
- Mark the damaged charger and deactivate it.
- The charger should only be reused after the fault has been identified and troubleshooting.
- Do not unplug the charger input power plug while the charger is working.
- Do not unplug the charger output while the charger is working.
- Do not directly touch the surface of the charger when the charger is working to avoid high temperature burns.

3.2.3 Safety reminder after use

⚠CAUTION

- Prerequisite.
- The charger is fully charged or standby.
- The charger is paused.
- Procedure.
- Turn off the charger air switch.
- Disconnect the charger input.
- Disconnect the charger output.
- When the charging process is over, roll up the charging cable or place it on the cable holder, and when placing the cable, make sure it doesn't get tangled or trip over people.

3.3 Service Safety Reminder

⚠DANGER

Dangerous voltage warning.

- Chargers are electrical devices in which voltage and current can endanger personal safety.
- The charger should only be operated by a trained and authorized professional.
- Before intervening in the charger or working on the charger, the power supply should be disconnected,and, if necessary, the battery should be disconnected.
- The inside of the charger can only be opened and repaired by obtaining local distributor authorized service

  The charger must be separated from the power supply and battery before maintenance or repair work begins.
- After 5 minutes of separation from the grid and the battery, the charger's housing can be opened from which the installed capacitors can be unloaded.
- No alterations, modifications and additions to the charger that affect safety are allowed without the local distributor's permission! This also applies to the installation and setting of safety devices• Special

  care should be taken not to narrow the spacing and air gaps.
- The spare parts used must meet the technical requirements specified by the local distributor This is always ensured by the use of original spare part.

3.4 Maintenance safety tips

⚠DANGER

Dangerous voltage warning.

- Chargers are electrical devices in which voltage and current can endanger personal safet The charger should only be operated by a trained and authorized professional.

⚠CAUTION

The wear and tear of the required maintenance parts is highly dependent on the actual operation and conditions of use of the charger. The following must be checked monthly.

- Whether the signal pin inside the output plug-in is firmly linked.
- Clean the dust of the filter screen at the air inlet of the fan, and replace it immediately if it is damaged.
- Use a dry rag to remove any foreign matter from the inside of the plug-in and the signal pin.
- Whether the grid interface is intact.
- Whether the enclosure is intact.
- Whether the insulation of the grid interface cable is intact.
- Whether all bolted joints are fixed or not.

⚠WARNING

- The following safety tests must be performed every 6 months or after the replacement of repair part. Ground resistance test.
- Insulation resistance test.
- Hipot test.
- Leakage current test.
- Output surge.
- Voltage dip test.

- Leakage protection.
- Protection against electric shock.

4 operation

4.1 Installation

4.1.1 Disassemble the box

⚠WARNING

Wear protective gloves when using any tools.

Use a tool to disassemble the box and Remove the charger from the box.	
Remove the protective mold.	

4.1.2 Install an industrial plug or socket

⚠DANGER

- The following work should only be performed by trained and authorized professionals.
- Do not install the device with electricity.

Check if the charger has an industrial plug installed, if not, please install the industrial plug as needed, we provide the following connections:

1. Industrial five-core: L1 connection black cable, L2 connection brown cable, L3 connection gray cable, N connection blue cable, PE connection yellow and green cable

2. Industrial four-core: L1 connection black cable, L2 connection brown cable, L3 connection gray cable PE connection yellow and green cable.

Schematic diagram of the completion of the connection.	

Note: The normal state is to carry the industrial plug by default, if you need to remove the industrial plug and want the cable to connect directly to the grid, please follow the IEC60446 standard to connect.

Note: The charger industrial plug current varies according to the model, see Section 2.6.

4.1.3 Installation of industrial sockets

⚠DANGER

- The following work should only be performed by trained and authorized professionals
- Do not install the device with electricity.
- Please use an outlet that matches the charger (current).

Use the socket provided in the charger box, and connect the grid side as follows

1. Industrial five-core: L1 connection black cable, L2 connection brown cable, L3 connection gray cable, N connection blue cable, PE connection yellow and green cable.

2. Industrial four-core: L1 connection black cable, L2 connection brown cable, L3 connection gray cable PE connection yellow and green cable.

Note: All chargers will carry an outlet that matches the industrial plug by default if you want to permanently connect the charger to the grid, please follow the IEC60446 standard.

4.1.4 Grid safety devices

⚠DANGER

- The following work should only be performed by trained and authorized professionals.
- Do not install the device with electricity.

⚠DANGER

- Missing or improperly designed leakage protection devices can lead to a risk of electric shock and fire.
- Missing or poorly designed residual current protection devices can cause fatal injuries by causing.
- Electric shock or fire in the event of a malfunction.
- necessary, use Type B or B+RCD (Residual Current Device, RCD).
- In order to operate the charger, the location of use must have a grid interface The supply voltage and frequency must match the instructions on the rating plate (see the section "Identification and Labeling on the Charger") As specified, grid interfaces must be properly grounded.
- The charger must be protected from excessive contact voltages according to the regulations of the local power supply unit (EVU).
- If the power cord of the charger is damaged, it must be replaced by the local distributor or its Customer.
- service department or appropriate qualified personnel to avoid danger.
- Do not install the device with electricity.

Refer to the following table for the safety device of the series power grid

Current rating	Grid safety devices	remark
> 0 to 6 A	6 A gL	A gL fuse can be used Or use a circuit autoprotector with K performance
> 10 to 16 A	16 A gL	
> 16 to 18 A	20 A gL	
> 18 to 23 A	25 A gL	
> 32 to 32 A	35 A gL	

The output current rate of the charger is detailed on the rating plate

charger		Fuse data[A]
Output current [A]		At an output voltage of 80 V
from	reach	/
0	100	600
100	150	600
150	200	600
charger		Fuse data[A]
Output current [A]		At an output voltage of 80 V
from	reach	/
0	100	600
100	150	600
150	200	600

4.1.5 Install the charger

⚠DANGER

- The following work should only be performed by trained and authorized professionals.
- There must be no flammable materials near the charger Included shipping and packaging materials are included.
- There must be no flammable materials within 2.5 m of the charger.
- The horizontal distance between the charger and the combustible material is at least 2.5m It is forbidden to store flammable materials (e g on shelves) above the charger or to use flammable.
- The distance between the material and the area where there is a risk of fire, explosion and explosion
- must be at least 5 meters.
- There must not be any liquid in the vicinity of the charger.
- Do not place any liquid on top of the charge.

⚠WARNING

- The following work should only be performed by trained and authorized professionals.
- The side distance to the next charger is at least twice the width of the charger If the spacing to the
- next charger cannot be respected, the chargers need to be staggered.
- Please install the charger in a vertical position, and there are no foreign objects around the fan to prevent the fan from getting foreign objects inside the charger when working Do not allow horizontal installation.
- Maintain a minimum lateral distance of 0,5 m from the next wall.
- Do not install this charger in a commercial environment.
- Fire extinguishing equipment must be prepared around the charger.
- Ensure optimal ventilation of the charger.
- When installing/installing the charger, you should pay attention to:
  - No corrosive gases, e g acid gases,
  - No conductive dust, such as soot or metal dust,
  - No excessive non-conductive dust is deposited
  - No water should enter the inside of the charger
- Pay attention and comply with the regulations set by the battery local distributor.
- In addition to the restrictions on the choice of installation site mentioned in this operating Nstruction national regulations must be observed.

⚠WARNING

- This series of chargers is suitable for charging industrial lithium batteries Any other use of the equipment is non-compliant and may result in injury, damage to the equipment, or other property Damage.
- The rated operating input voltage range, frequency range, maximum input current, and input power are all specified in detail on the nameplate.
- The rated working output voltage range, current range, and constant power are all specified in detail on the nameplate.
- Used in industrial environments.
- The permissible temperature range is between -10°C and 45°C .
- Relative humidity is 5%~95%.
- The altitude should not exceed 2000 m .

- Input voltage fluctuation range of ±15%.
- Storage temperature: -20 °C~75 °C.
- Storage humidity 5%~95%.

Schematic diagram of the completion of the installation	

Note: If the environmental conditions exceed the above range, you should contact us in advance to negotiate and solve.

4.2 Operators Daily Checklist

⚠WARNING

- The forklift charging space is kept fully ventilated.
- The fan is not clogged, there is no foreign object around and not a single vent is clogged.
  Within a radius of at least 2,5 m around the forklift that needs to be charged, no flammable materials and work equipment that could generate sparks are placed.
- There are no flammable, explosive, or combustible materials, chemicals, flammable vapors, and other to the cable socket.
- dangerous items in the vicinity of the charger.
- The available space around the charger is sufficient to provide adequate ventilation and easy access to the cable socket.
- The charger is not in an environment where liquid has entered and has some waterproof measures Nothing is placed on the output cable and input power cord, or placed in a place where people cannot step on it.
- There are no defects, cracks, worn or exposed copper wires on the surface of the output plug and cable, the charging output plug is clean and dry, there is no dirt, iron filings and other foreign Objects inside, and the cable is not entangled with any items and is not knotted.
- The input and output cables are not scattered and tangled, and people can get entangled or trip over the scattered and surrounded cables.
- Confirm that there are no defects, cracks, worn, or exposed copper wires inside the input plug and wires and cables, that the charging input plug is clean and dry, that the metal contacts are free of foreign objects such as dirt and iron filings, and that the metal contacts are in a shiny state.

⚠WARNING

Never start the charger until any damage or malfunction of the charger has been resolved.

4.3 Start the charger

⚠DANGER

- Before connecting the output, make sure that there is no fault information on the charger display interface.
- Do not connect batteries that cannot be charged.
- Do not connect any commercial batteries.
- Do not connect any lead-acid batteries.
- It is forbidden to smoke or use an open flame around the battery.
- Make sure that liquid does not flow into the inside of the charger.
- Before connecting the battery, it is essential to check and follow the instructions on the rating voltage of the allowable battery voltage (see the "Identification and Labeling on the Charger" section)
  Place the battery in front of or next to the charger so that the battery plug is within the operating distance of the charger's charging cable (standard 2,5 m).
- The relevant safety regulations of the local distributor of the battery and the charging station must be
  strictly followed.
- The charger input and output cables can only be connected or unplugged when the charger and forklift are turned off.

- If the charging process is interrupted by unplugging it, there is a risk of personal injury The resulting spark can ignite the charging gas formed during charging, which can cause a fire or explosion.
- For chargers whose charging procedures can be changed subsequently, the operator is obliged to record the applicable battery type on the housing.

- If it is determined that there are safety-related changes, damage, or other defects in the charger or in performance, the charger must not be used until repairs have been carried out in accordance with record the applicable battery type on the housing.
- If you find any damage, you can immediately feedback with the local distributor.
- Mark the damaged charger and deactivate it.
- The charger should only be reused after the fault has been identified and troubleshooting.

⚠WARNING

Wipe off any water stains on your hands to avoid electric shock

Connect the charger AC input to the power grid.	
Turn on the charger air switch.	

Using the charger output connector, connect the battery.	
Press the start button on the front panel of the charger to make the charger start and enter the working state.	

Note: The plug needs to be securely connected at a height of 1 meter from the ground.

4.4 Working status

⚠WARNING

- Do not unplug the charger input power plug while the charger is working.
- Do not unplug the charger output while the charger is working.
- Do not directly touch the surface of the charger when the charger is working to avoid high temperature burns.

Light Strip Color	Charger State	Photo
RED	Charging	
GREEN	Standby or fully charged	
YELLOW	Fault	

4.5 Running curves

The charger will output the corresponding voltage and current according to the lithium battery CAN message, the above curve is only test data, it does not mean that the charger will be charged according to this curve.	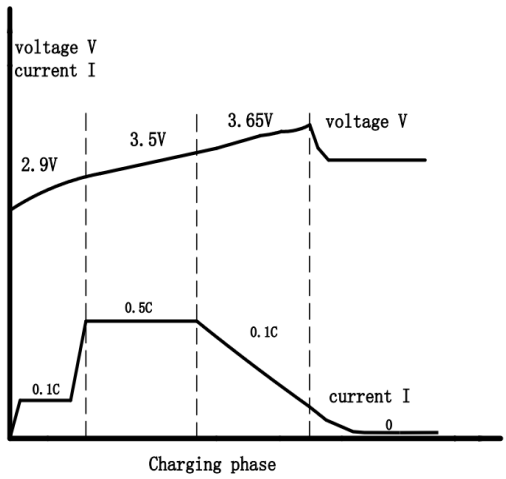

Note: In the curve, V represents the voltage of the monomer, 24V monomer = 8 strings, 48Vmonomer =15 strings, 80V monomer = 24 strings. The calculated curve voltage should = number of cells * cell Voltage.

Note: In the curve, C is equal to the actual capacity of the battery. In the calculation, the current Operating current should = the actual capacity of the battery * the current execution multiple, For example, the 80V400AH battery needs to be charged, according to the above graph, the working logic of the charger should be that when the voltage is lower than 69.6V, the charger will output 40Acurrent.

When the battery voltage is greater than 69.6V and lower than 84V, the charger will output 200A current. When the battery voltage is greater than 84V and lower than 87.6V, the charger will output 40A current and maintain it until the battery is fully charged.

4.6 Once the operation is complete

Disconnect the charger input.
Disconnect the charger output.
When the charging process is over, roll up the charging cable or place it on the cable holder, and when placing the cable, make sure it doesn't get tangled or trip over people.

Use the charger that was placed after completion	

4.7 Accessibility

4.7.1 The main interface of the charger

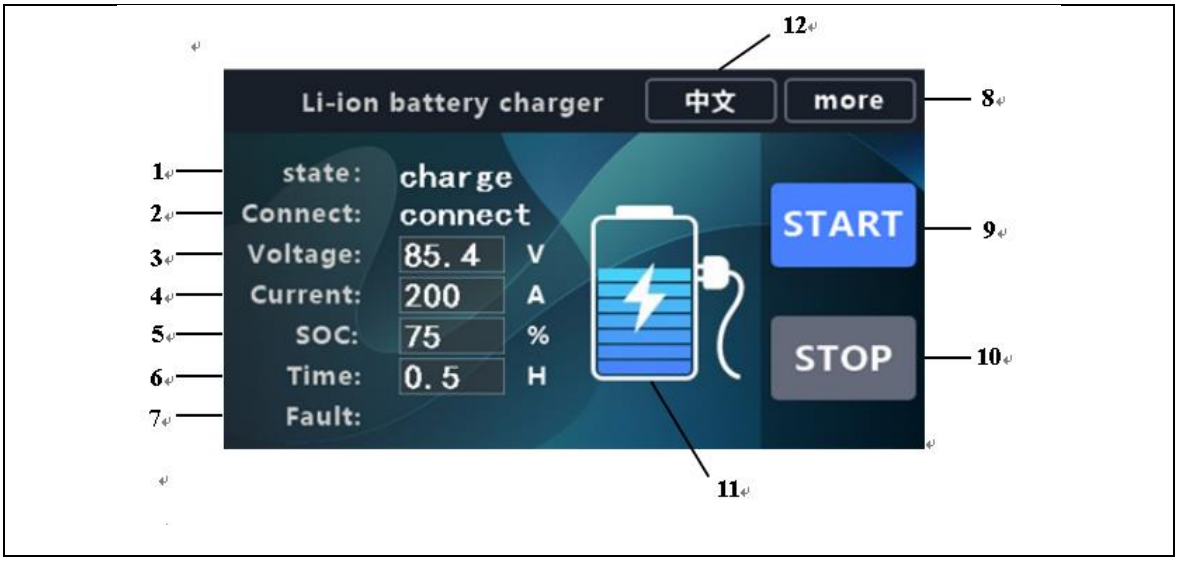

The main page displays the following charging information:

1、working state	7、fault info
2、connect state	8、more info
3、output voltage	9、start charge
4、output current	10、stop charge
5、SOC	11、battery BMS info
6、charging time	12、Language switching

Click the start button and stop button to control the charger to start and stop.
The charger supports English and Chinese. You can change the language of the Charger by clicking the.
Chinese and English switch button. This language switch button can be hidden.

4.7.2 Battery information inquiry

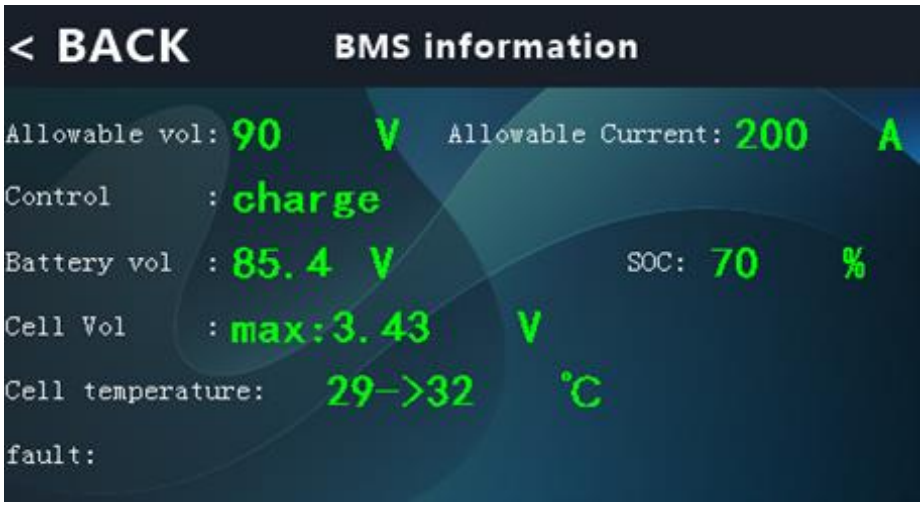

Click battery info icon(11) enter battery BMS info interface:
The battery information interface contains various parameters sent by the.
battery to the charger, such as demand voltage, demand current, control status and other information.

4.7.3 Functional interface

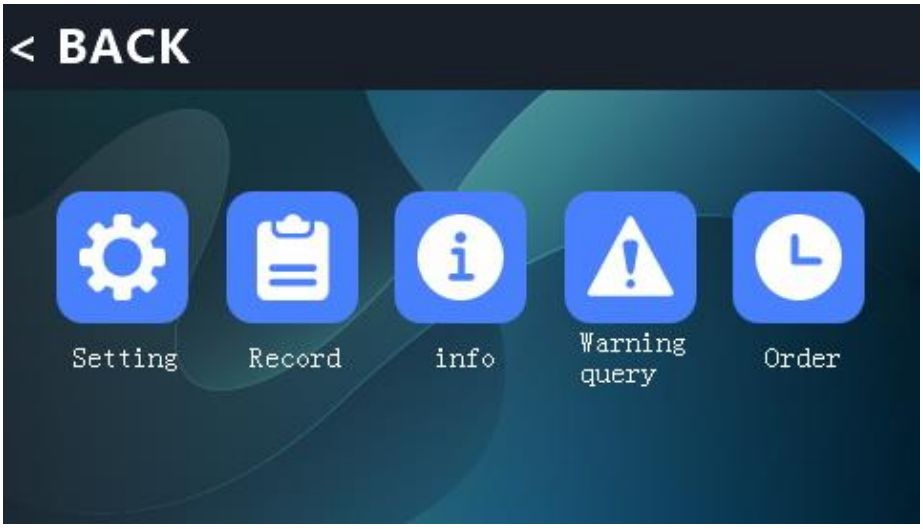

Click more (8) enter function setting interface:

1、Parameter Setting	4、Fault and solution
2、Charging Record	5、Charging time appointment
3、Charger specification info	

4.7.4 Parameter settings

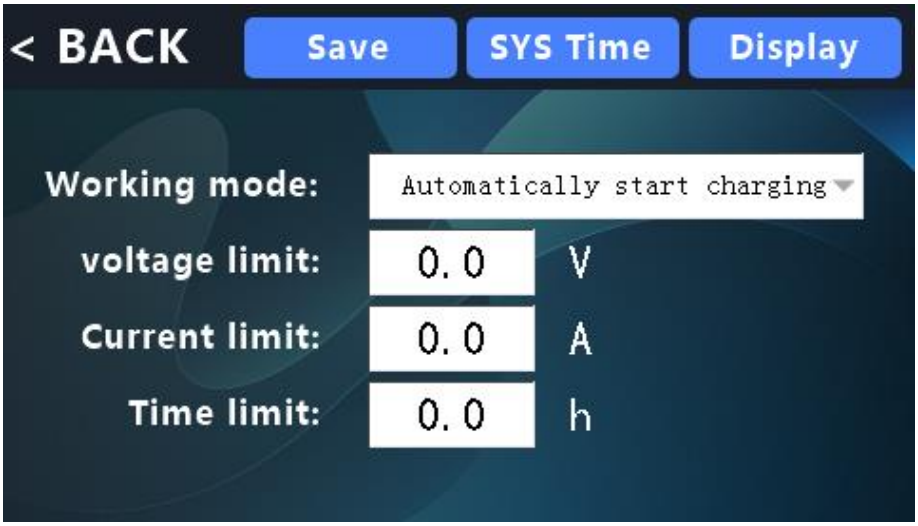

Click setting(1) icon to enter the setting function interface:

1、working mode options (automatic&Manual)	5、save the parameter setting
2、charger output voltage limit	6、save the parameter setting
3、charger output current limit	7、change the display style
4、charging time limit	

Detail introduction of the parameter setting interface:

- Working mode setting: The charger is divided into two modes: manual charging and automatic charging, which can be adjusted according to needs.
- Start charging manually: After connecting the battery with the charger, you need to press the start button for the charger to start charging.
- Auto-start: When you click this option, when the battery is connected to the charger, the charger can start charging on its own without pressing the Start button.
- Output voltage limit: The voltage output by the charger can be set.
- Output current limit: The current output of the charger can be set.
- Charging time limit: limit the working time of the charger, and it will stop automatically when the set value is reached.
- Parameter setting save.
- System time: View the system time and change the time manually.
- Display style: Click to switch display style.
- Note: Limitations feature explained:
- Output Voltage Limit: The voltage can be set according to the maximum output of the charger, such as FST-Li-48V150A-XXX, this charger can reach 0-60V,
- Output voltage limit: The current can be set according to the maximum output of the charger, such as FST-Li-48V150A-XXX, this charger can reach 0-150A,
- Charging time limit: The charger can work at a preset time, if you want the charger to work at night,

you can calculate it according to the current time and calculate the value that can be filled.
Note: If you change the above parameters, you need to click Save and return.

4.7.5 Charging record interface

Click setting(1) icon to enter the setting function interface:
Charging record interface:

1、charging serial number	6、charging end time
2、start SOC	7、charging fault record
3、end SOC	8、last charging record
4、battery charging AH Value	9、next charging record
5、charging start time	10、clear

The charger record query interface allows you to view the charger record. The charger records include :
start time , end time , battery SOC at the beginning , battery SOC at the end , each charging time , each charging energy and fault information etc.

4.7.6 Charger information inquiry

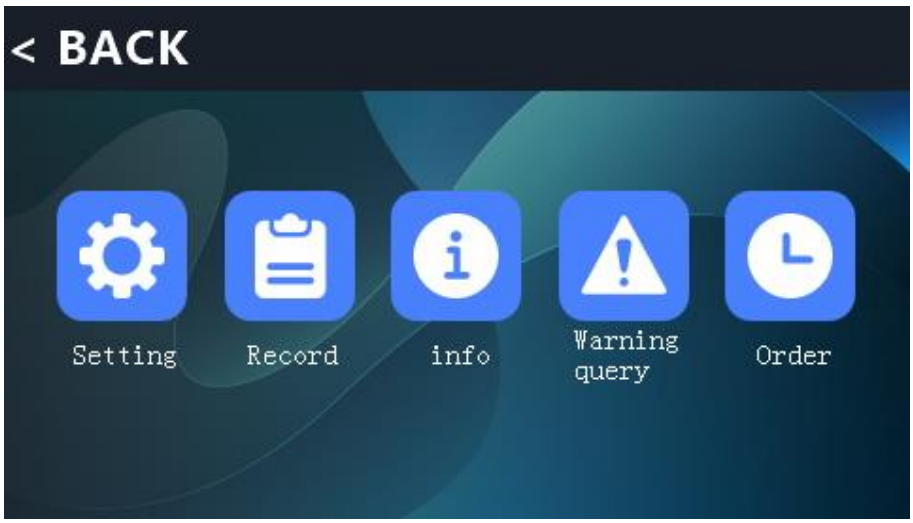

Charger specification information interface:
Click the info icon:

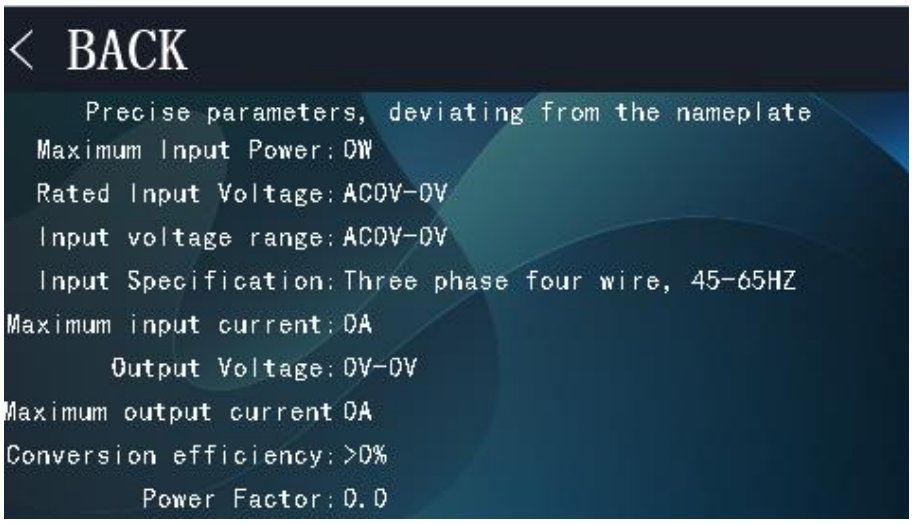

Charger specification information interface:
Enter the charger information interface to view the specific parameters of the charger .
Including information such as the charger's rated input voltage, input voltage range, maximum input current, output voltage, maximum output current and conversion efficiency.

4.7.7 Warning information query

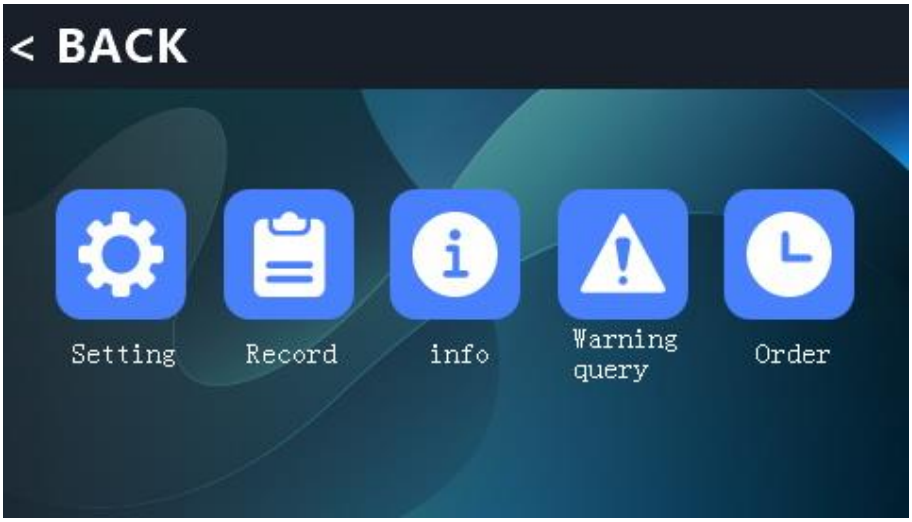

Click the warning query icon:

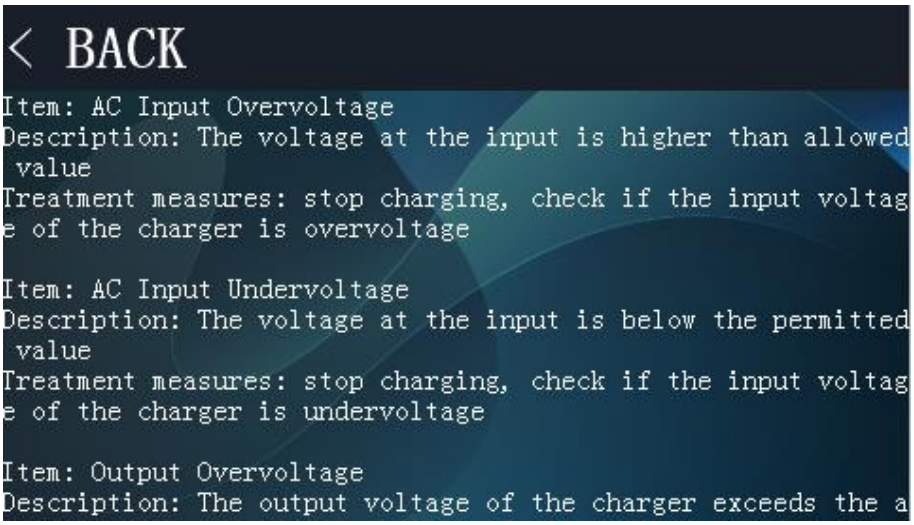

Charger warning query: Click More on the main page and click warning Query to view fault items, fault descriptions, and solutions.

4.7.8 Timed charging function

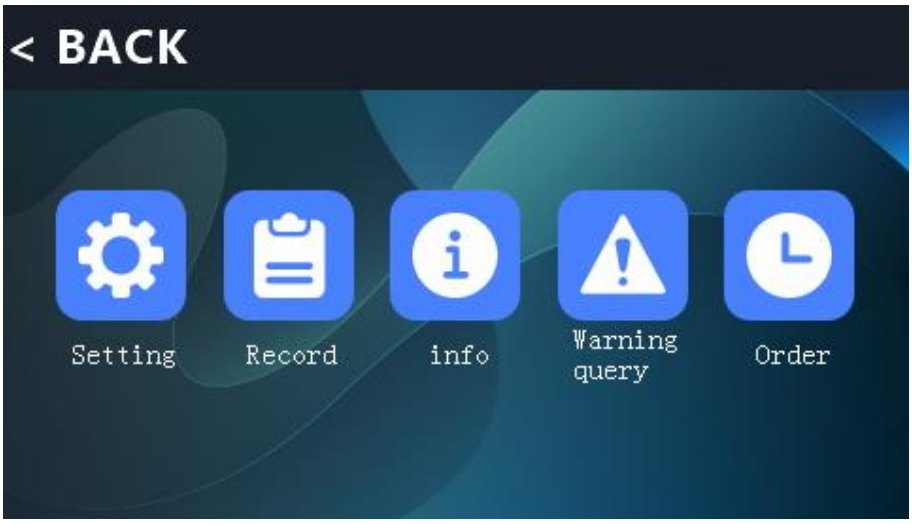

Click order icon:

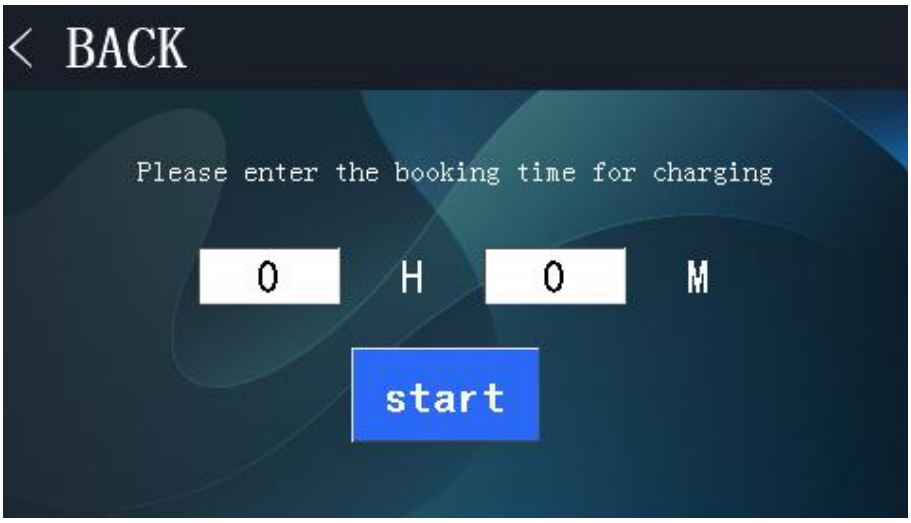

Charger reservation time setting: Click More on the main page, click Order, enter the scheduled charging interface, fill in the time you want to charge, click Start, the charger will start counting down, and when the time is up, the charger will automatically start charging without manual labor.

4.7.9 Historical data query

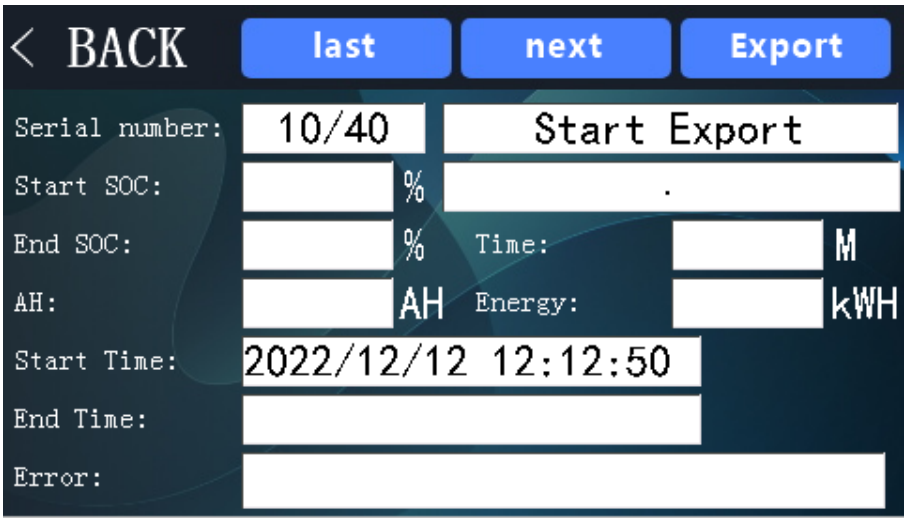

Historical charger data query

The charger record query interface allows you to view the charger record . Charging records can Be exported to TF card. The charger records include : start time , end time , battery SOC at the Beginning battery SOC at the end , each charging time , each charging energy and fault information .

Note: please note this is an option function, if need such function, please contact local distributor.

5 Description of the fault

5.1 Fault table

Fault Code	Item	Description
1	BMS hardware failure	BMS Battery failure
2	BMS Communication Fault	Communication between the charger and BMS is interrupted
3	Battery Overvoltage	The output voltage is higher than the allowable value
4	Battery Undervoltage	The output voltage is lower than the allowable value
5	Battery Overtemperature	The battery temperature is higher than the allowable value.
6	Battery Low Temperature	The battery temperature is lower than the allowable value.
7	BMS voltage imbalance	Excessive voltage difference in the battery pack
8	BMS temperature difference	Excessive temperature difference in the battery pack
9	BMS other failure	Unknown malfunction in the BMS
10	AC Input Overvoltage	The input voltage is higher than the allowable value
11	AC Input Undervoltage	The input voltage is lower than the allowable value
12	AC input phase loss(Only applicable to three-phase input)	AC input phase loss
13	Output Overvoltage	The output voltage is higher than the allowable value
14	Output overcurrent	Charger's output current exceeds the allowed limit
15	Output short circuit fault	Short circuit at the charger's output terminal
16	Battery reverse connection fault	Battery's positive and negative terminals are connected in reverse
17	Charger overheating	Charger overheating
18	Hardware failure	Charger hardware malfunction
19	Fan failure	Fan cannot start properly

20	Relay failure	Relay cannot operate
21	Other hardware failure	Unknown malfunction in the charger

5.2 Simple breakdown repairs

5.2.1 BMS series failure

BMS (Battery Management System) faults range from 1 to 9, please refer to the battery manual.

⚠DANGER

Before intervening with the charger, disconnect the charger input and output.

BMS hardware failure
Solution: Please consult the battery repair manual.

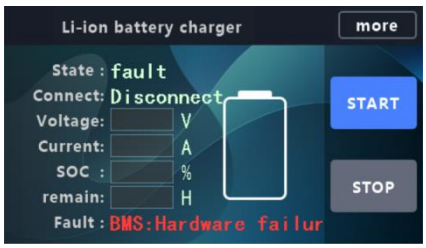

BMS Communication Fault
Solution: Please consult the battery repair manual.

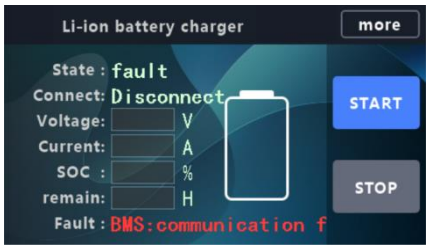

Battery Overvoltage
Solution: Please consult the battery repair manual.

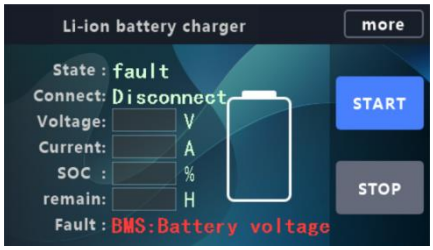

Battery Undervoltage
Solution: Please consult the battery repair manual.

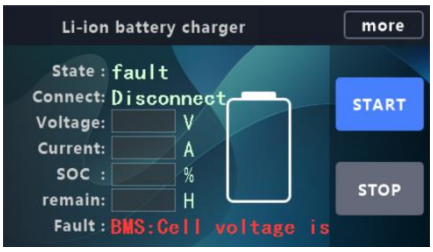

Battery Overtemperature
Solution: Please consult the battery repair manual.

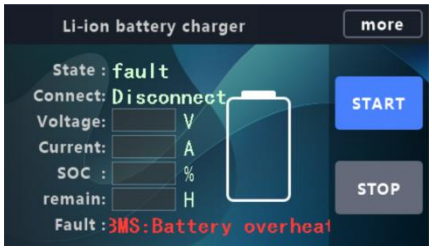

Battery Low Temperature
Solution: Please consult the battery repair manual.

BMS voltage imbalance
Solution: Please consult the battery repair manual.

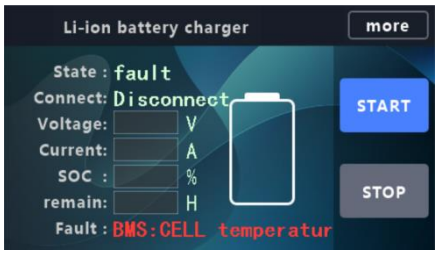

BMS temperature difference
Solution: Please consult the battery repair manual.

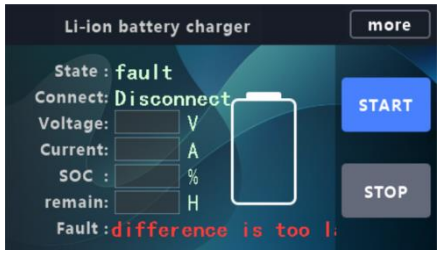

BMS other failure
Solution: Please consult the battery repair manual.

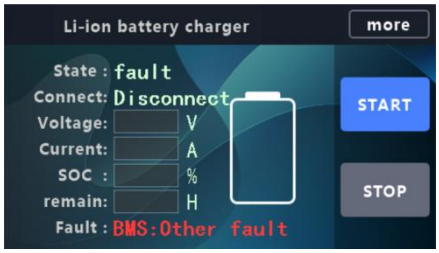

5.2.2 Fault

10&11: AC Input Overvoltage

BMS (Battery Management System) faults range from 1 to 10, please refer to the battery manual

⚠DANGER

- The following faults need to be carried out by a professional electrician.
- Before intervening with the charger, disconnect the charger input and output.
- Do not touch the metal surface on the outside of the charger to avoid high temperature burns.

Cause of failure: The AC input voltage exceeds the allowable range of the Charger Solution: Adjust the power grid.

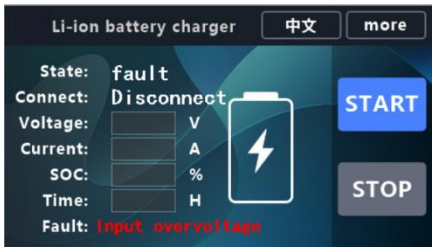

Cause of failure: The AC input voltage is lower than the range of the charger Solution: Adjust the power grid.

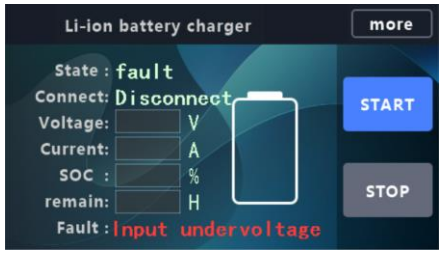

5.2.3 Fault 12 AC input phase loss

⚠DANGER

- The following faults need to be carried out by a professional electrician
- Before intervening with the charger, disconnect the charger input and output
- Do not touch the metal surface on the outside of the charger to avoid high temperature burns

Cause of failure: three-phase power loss of one phase.
Solution: Check whether the loss on the grid side is phased, check whether the wiring at the air switch is loose, and check whether the input terminal of the power module is loose.

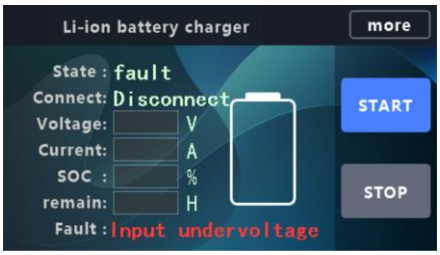

5.2.4 Fault 13&14: Output Overvoltage & Output Overcurrent

⚠DANGER

- The following faults need to be carried out by a professional electrician.
- Before intervening with the charger, disconnect the charger input and output.
- Do not touch the metal surface on the outside of the charger to avoid high temperature burns.
- When detecting the output voltage, voltage, and current, do not touch any of the metal contacts of the connector with your hands.
- Please wear gloves when using tools.

Cause of failure:
Output over voltage: the output voltage of the charger exceeds the Max value.
Output under voltage: the output voltage of the charger is lower than Minimum value.

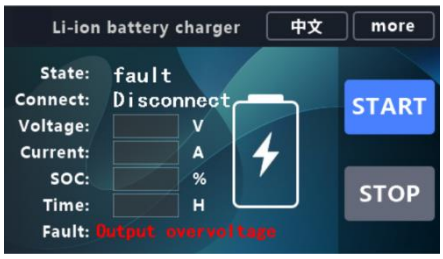

Cause of failure: The output current of the charger exceeds rated current. Solution: Revise the output current value of the charger to rated current.	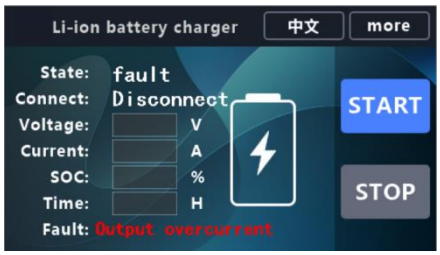

5.2.5 Fault 15：Output short circuit

⚠DANGER

- The following faults need to be carried out by a professional electrician.
- Before intervening with the charger, disconnect the charger input and output.
- Do not touch the metal surface on the outside of the charger to avoid high temperature burns.
- When detecting the output voltage, voltage, and current, do not touch any of the metal contacts of the connector with your hands.
- Please wear gloves when using tools.
- Do not damage the insulation of the cable when testing the cable to avoid the risk of electric shock.

Fault cause: short circuit between the positive and negative poles of the output port. Solution: The multimeter measures whether the output is short-circuited, if it is short-circuited, please replace the output cable.	

5.2.6 Fault 16：Battery reverse connection fault

⚠DANGER

- The following faults need to be carried out by a professional electrician.
- Before intervening with the charger, disconnect the charger input and output.
- Do not touch the metal surface on the outside of the charger to avoid high temperature burns
- When detecting the output voltage, voltage, and current, do not touch any of the metal contacts of the connector with your hands.
- Please wear gloves when using tools.
- Do not damage the insulation of the cable when testing the cable to avoid the risk of electric shock.

Cause of failure: The cable is reversed to the battery. Solution: Whether the positive and negative poles of the output terminal of the charging cable are correctly matched with the battery charging terminal, if the connection is reversed, please replace the positive and negative poles of the plug-in.	

5.2.7 Fault 17：Over-temperature of Charger

⚠DANGER

- The following faults need to be carried out by a professional electrician.
- Before intervening with the charger, disconnect the charger input and output.
- Do not touch the metal surface on the outside of the charger to avoid high temperature burns.
- Please wear gloves when using tools.

Cause of failure: The temperature of the PCB exceeds the limit value. Solution: Wait for the PCB to cool down, or use a fan to cool down, and it can operate normally after cooling.	

5.2.8 Fault 18：hardware failure

⚠DANGER

- The following faults need to be carried out by a professional electrician.
- Before intervening with the charger, disconnect the charger input and output.
- Do not touch the metal surface on the outside of the charger to avoid high temperature burns.
- Do not touch the power module or PCB directly with your hands.
- After the repair is completed, please refer to 3. 4Cleaning and maintenanc.
- Please wear gloves when using tools.

Cause of failure: The PCB connector is loose, or the wiring is wrong, or the components are damaged. Solution: Check whether the PCB wiring is loose and whether the wiring is correct, if the above two checks are normal. The PCB needs to be replaced.	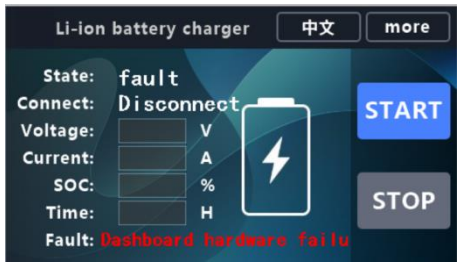
Cause of failure: incorrect wiring, loose wiring, or module damaged. Solution: Check whether the power module wiring is loose, whether the wiring is correct, if wiring checks are no problem, replace the power Module.	

5.2.9 Fault 19: Fans Failure

⚠DANGER

- The following faults need to be carried out by a professional electrician.
- Before intervening with the charger, disconnect the charger input and output.
- Do not touch the metal surface on the outside of the charger to avoid high temperature burns.
- Do not touch the power module or PCB directly with your hands.
- After the repair is completed, please refer to 3. 4Cleaning and maintenanc.
- Please wear gloves when using tools.

Cause of failure: The power module fan can not rotate Solution: Check whether there is an object stuck the fan, if there is no foreign object but it still cannot rotate, replace the power module.	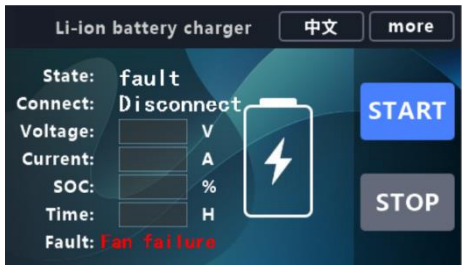

5.2.10 Fault 20: Fans Failure

⚠DANGER

- The following faults need to be carried out by a professional electrician.
- Before intervening with the charger, disconnect the charger input and output.
- Do not touch the metal surface on the outside of the charger to avoid high temperature burns.
- Do not touch the power module or PCB directly with your hands.
- After the repair is completed, please refer to 3. 4Cleaning and maintenanc.

• Please wear gloves when using tools.

Cause of failure: Loose wiring of the relay, or wrong wiring, or damage to the relay. Solution: Check the relay wiring, if the connection is normal, replace the relay.	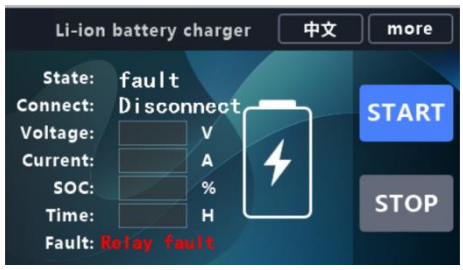

5.2.11 Fault 21：Other Hardware Failure

⚠DANGER

Please disconnect all connections to the charger immediately

Please contact local distributor Claims Assembly	

It is strictly forbidden to repair the charger in the following situations

⚠DANGER

The charger burns out

The location fault occurred and the fault code is not in the fault table provided by the local distributor

5.3 Service support

Most of the above situations can be resolved with simple troubleshooting. If it is determined that the issue does not fall into the above category, it may indicate that the charger's hardware is damaged. Customers who meet the after-sales service conditions are kindly requested to contact local distributor in time for hardware replacement.

If you are unable to identify the problem, need to replace the hardware, or need to change the software, please contact local distributor. In this case, remote video communication may be required.

When contacting the local distributor, please provide a detailed description of the problem. For charger fault repairs, please provide charger nameplate information, battery information, and capture CAN communication information during charging if necessary to identify specific problems.

6 Waste disposal

NOTE

Chargers should be collected separately from household or commercial waste and properly recycled or disposed of Take the old charger (if any) in-house for disposal and hand it over to a professional company (professional waste disposal company) In principle, it is also possible to return the old charger to the local distributor. To do so, please contact the local distributor's customer service department. Specific protocols must be adhered to.

According to the European WEEE Directive (2012/19/EU), electrical and electronic equipment must be collected, recycled or professionally disposed of separately from unsorted municipal waste, where pollutants resulting from improper disposal can cause lasting damage to health and the environment.

Detailed information can be obtained at the Waste Disposal Specialist Plant or the relevant authority The packaging of the charger should be disposed of separately. Paper, cardboard and plastic are recycled.

USER MANUAL 用户手册

F、D系列侧移器

F、D-SeriesSideshifter

目录 CONTENTS

	Page
介绍 **INTRODUCTION**	
特别定义 Special Defnitions	1
操作 **OPERATION**	
安全法则 Safety Rules	2
叉车 Forklift Trucks	2
货物搬运 Handling Loads	3
侧移器操作 Sideshifter Operation	3
安装 **INSTALLATION**	4
对叉车的要求 Truck Requirements	4
推荐液压系统 Recommended Hydraulic Supply	4
安装步骤 Installation Procedure	5
	6
定期保养 **PERIODIC MAINTENANCE**	
每天 Daily	7
100小时保养 100-Hour Maintenance	7
300小时保养 300-Hour Maintenance	7
1000小时保养 1000-Hour Maintenance	7
备件 **PARTS**	
F系列侧移器总成 F-Series Sideshifter Assembly	8
F系列侧移器油缸 F-Series Sideshifter Cylinder	9
D系列侧移器总成 D-Series Sideshifter Assembly	10
100D侧移器油缸 100D Sideshifter Cylinder	11
150D侧移器油缸 150D Sideshifter Cylinder	12
推荐备件 Recommended Spare Parts	13
质量保证政策 **WARRANTY**	14

服务热线
Customer Service Hotline
40088 57315

ISO9001、ISO14001、ISO3834-2、OHSAS18001

卡斯卡特(厦门)叉车属具有限公司
厦门市海沧阳光路668号 邮编：361026 电话：0592-6512500 传真：0592-6512571

关注官方微信号
服务网络全知道

概述 INTRODUCTION

这本用户手册适用于卡斯卡特F、D系列侧移器，包括操作指南，安装说明与推荐备件。所有说明在需要的地方都标有英制与公制单位的标记。

This User Manual is for Cascade F-Series，D-Series Sideshifters。It contains an Operation Guide，Installation Instructions，and Recommended Spare Parts。All specifcations are shown in Imperial and（Metric）units where applicable。

重要提示：F、D系列侧移器上的管路和接头标准配置为国际端面密封形式(螺纹规格M18×1.5)，特殊接头形式请洽谈卡斯卡特销售代表。

IMPORTANT: All hosing and fared fttings on F-Series， D-Series Sideshifters are GB standard face seal type(M18×1.5)。For speical type please contact Cascade Xiamen.

特殊定义 Special Definitions

本手册含有一些特色的提示.操作前务必仔细阅读所有的"警告"和"注意"。"重要提示"和"备注"则作为具有特定意义或简化工作的信息提供。

The statements shown appear throughout this Manual where special emphasis is required。Read all WARNINGS and CAUTIONS before proceeding with any work。Statements labeled IMPORTANT and NOTE are provided as additional information of special signifcance or to make the job easier。

警告:叉车/属具的综合承载能力由叉车制造商决定可能比属具铭牌所标注的数值来得低。

WARNING: Rated capacity of the truck/attachment Combination is a responsibility of the original truck Manufacturer and may be less than shown on the attachment Nameplate。Consult the truck nameplate。

警告:非得到许可的专业人员不得操作属具。

WARNING: Do not operate this attachment unless you are a trained and authorized lift truck driver。

警告: 所示内容必须切实牢记、以免造成人身伤害.

WARNING- A statement preceded by WARNING is information that should be acted upon to prevent **bodily injury**。
A WARNING is always inside a ruled Box。

注意: 此类标识的内容必须遵守,以免造成设备损坏。
重要提示: 这种提示包含特定信息。
备注: 这种标识所含信息便于使工作简化。

CAUTION- A statement preceded by CAUTION is information that should be acted upon to prevent machine damage。

IMPORTANT- A statement preceded by IMPORTANT is information that possesses special signifcance。

NOTE- A statement preceded by NOTE is information that s handy to know and may make the job easier。

操作 OPERATION

这个章节包含了卡斯卡特F、D系列侧移器操作指南。旨在帮助你在操作中避免属具及货物的损伤。

这些信息旨在使操作者更容易掌握如何高效安全地使用和操作侧移器。在操作前请仔细阅读本手册，掌握所有的操作步骤及安全规则，不详之处请向你的上级请教。

安全第一！ 大多数的事故都起因于操作或判断失误，请格外留心维护保养状况差和工况恶劣的属具并及时加以解决。

This section contains operating instructions for Cascade F-Series、D-Series Sideshifters。It will help you avoid Common errors which often cause damage to the equipment or product being handled。

This information is intended to simplify operator understanding about effective and safe Sideshifter use and operation。Read this information thoroughly before operating the Attachment。Be sure you know and understand all operating procedures and safety Precautions。If you have any questions, or don't understand a procedure，ask your supervisor。

Emphasize Safety！Most accidents are caused by operator carelessness or misjudgement。You must watch for poorly maintained equipment and hazardous situations and correct them。

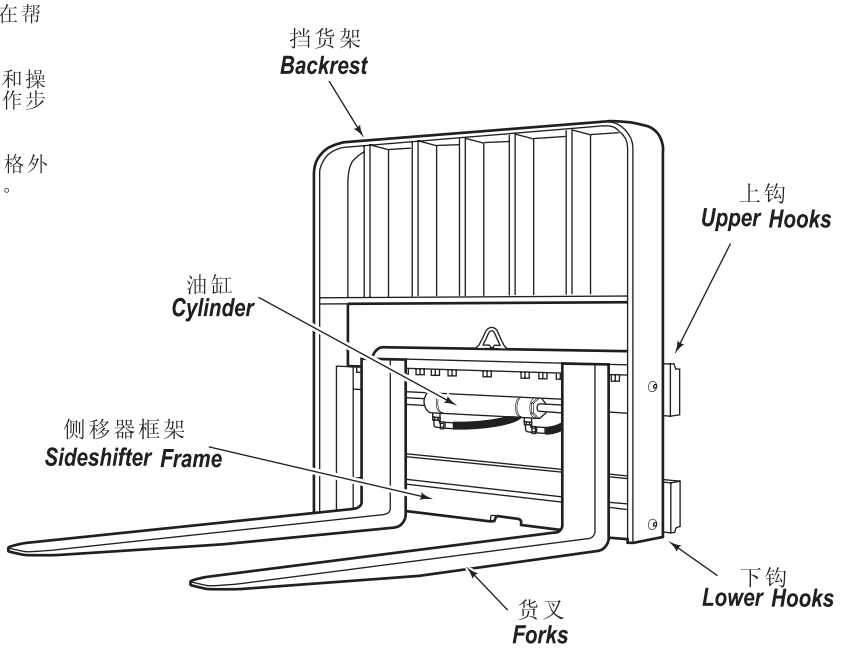

安全规则-叉车 Forklift Trucks

禁止载人行驶
No riders

不要伸手穿越门架
No reaching through mast

禁止货叉下站人
No standing under load

关闭发动机，制动，降下货叉
Motor off,park, lower load

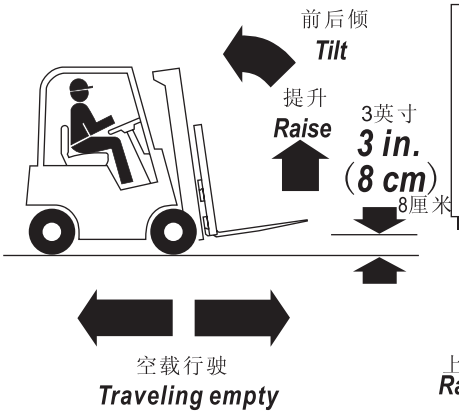

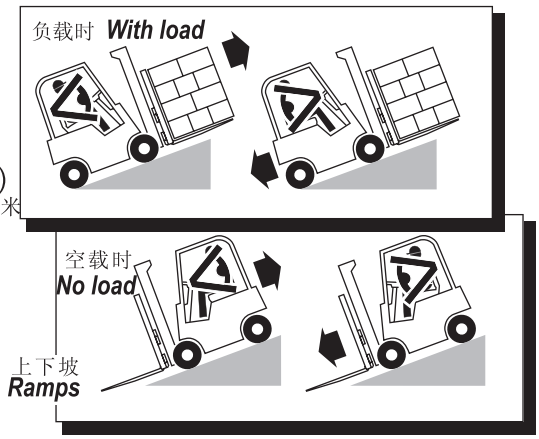

禁止坡上停车
No parking on ramp

禁止坡上转弯
No turning on ramp

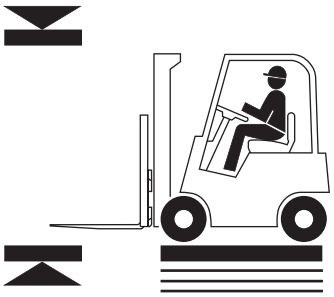

注意行驶空间
Watch clearances

交通标志
TRAFFIC

观察 *Observe*

湿地
Wet floors

工作人员
Workers

停止
Stops

凸起
Bumps

凹坑
Dips

双向行驶时须慢行
Slow for two-way traffic

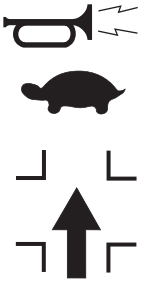

十字路口处鸣笛，慢行
Sound horn,slow at intersection

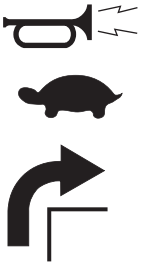

转弯时须鸣笛，慢行
Sound horn,slow at corner

安全规则-搬运载荷 *Safety Rules-Handling Loads*

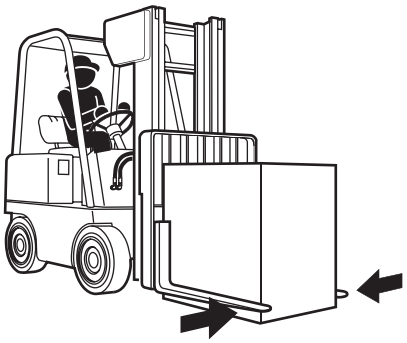

小心:不能用单个货叉挑货物
CAUTION: Do not put side loads on forks

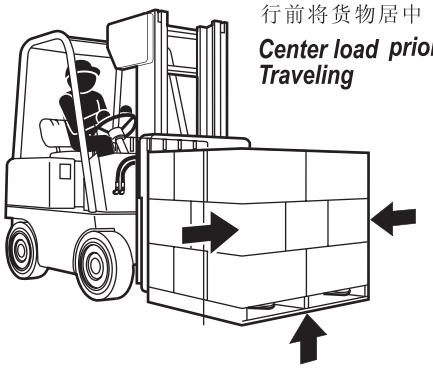

行前将货物居中
Center load prior to Traveling

举升货物后再侧移
Raise load prior to sideshifting

举升货物时避免过分侧移
Limit sideshifting with raised load

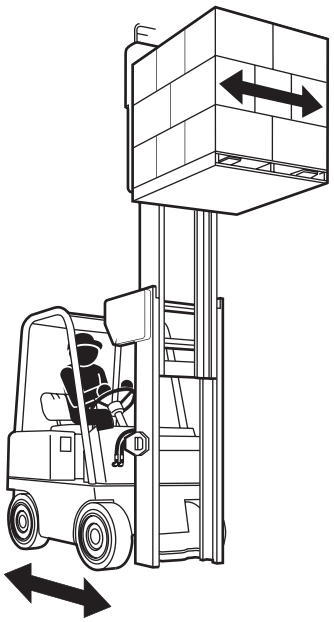

举升货物时叉车应限速行驶
Limit truck movement with raised load

货物顶部不超过挡货架
Top of load should not extend above backrest

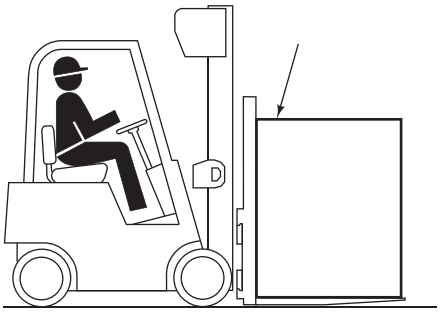

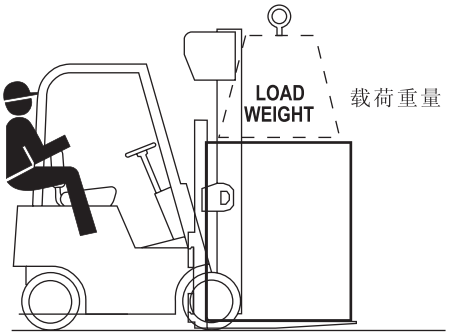

货物重量必须小于叉车/属具组合承载能力
(见叉车铭牌)
Load weight must not exceed combined truck/attachment capacity (see truck nameplate)

左右货叉总承载能力必须大于货物重量
Total fork capacity (LH+RH fork) must be greater than load weight。Check capacity stamp on forks

侧移器操作 *Sideshifter Operation*

多路阀功能 ***Auxiliary Valve Functions***

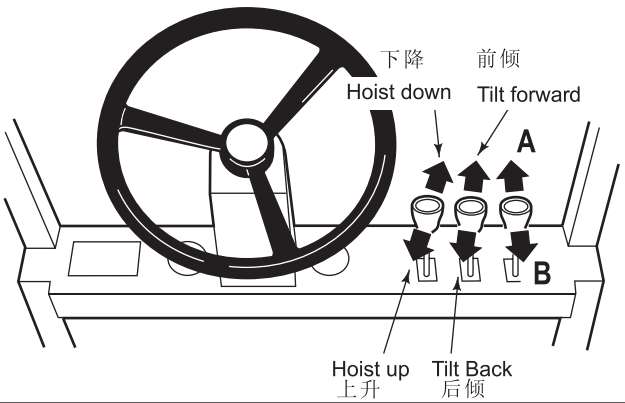

侧移功能 ***Sideshifting Functions***

A 左侧移 Sideshift Left

B 右侧移 Sideshift Right

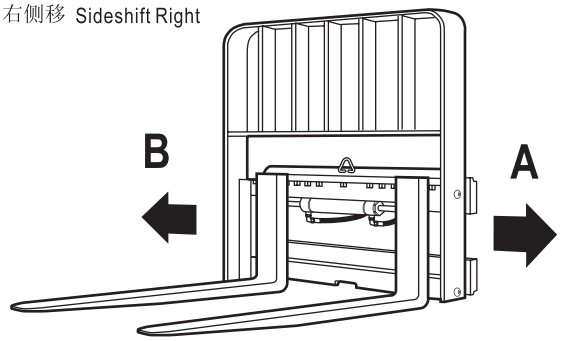

对叉车的要求 Truck Requirements

叉车供油压力设置 **Truck Relief Setting**

推荐压力值:140bar Recommended: 2000 psi

D系列 210bar Maximum: 3000 psi–D-Series

F系列 240bar Maximum: 3500 psi–F-Series

叉车流量 **Truck Flow Volume**

	Min.① 最小	Recommended 推荐	Max.② 最大
55F&65F	1 GPM (4 L/min.)	2 GPM (7.5 L/min.)	3 GPM (12 L/min.)
100D、100F、120F 150F&165F	1 GPM (4 L/min.)	4 GPM (16 L/min.)	5 GPM (20 L/min.)
150D	1 GPM (4 L/min.)	6 GPM (22 L/min.)	12 GPM (45 L/min.)

① 如果流量低于推荐值会造成侧移器速度变慢。
Flow less than recommended will result in a slow sideshift speed。

② 如果流量大大超过最大值会造成过热。降低系统性能缩短油缸寿命。
Flow greater than maximum can result in excessive heating, reduced system performance and short hydraulic system life。

货叉架安装尺寸(A)

Carriage Mount Dimension (A) ITA (ISO)

	最小 Minimum	最大 Maximum
ClassII	14.94 in. (380.0 mm)	15.00 in. (381.0 mm)
ClassIII	18.68 in. (474.5 mm)	18.74 in. (476.0 mm)

Carriage– Clean and inspect carriage Bars。 Assure that bars are parallel and that ends are flush。 Grind smooth any protruding welds that may affect Sideshifter lower Bearings。 Repair any damaged notches。

挡货架–清理和检查货叉架.确保横梁是平行的而且端部是平直的。将所有焊接凸出部位打磨光滑以免影响侧移器的下滑块。修补所有被破损的凹坑。

推荐供油系统 Recommended Hydraulic Supply

侧移器需要以下液压供油管路之一。所有的管路连接必须采用内径不小于3/16英寸5mm油管和接头。相关可参考卡斯卡特带电缆卷管器选择规范,其编号为212199,该规范为叉车和门架选择正确的卷管器提供了指导。

The Sideshifter will require one of the hydraulic supply arrangements shown below。 All hoses and fittings should be at least No. 4 with 3/16 in. (5 mm) minimum I.D. Refer to Cascade *Hose & Cable Reel Selection Guide*, Part No. 212199 to select the correct hose reel for the mast and truck。

Auxiliary Valve Functions 多路阀功能
Check for compliance with ITA (ISO) standards: 确保符合ITA(ISO)标准:

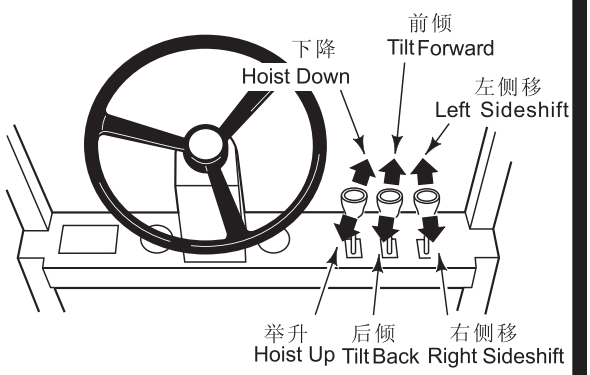

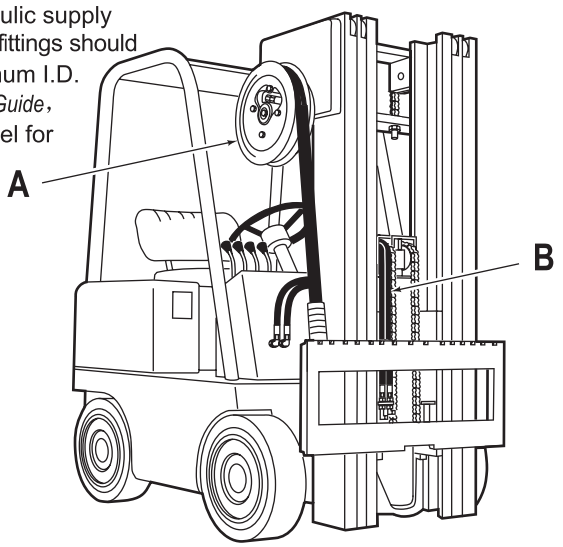

A 两路式细管卷管器及安装组件

A RH THINLINE™ 2-Port Hose Reel Supply Group

B 内系同步油路

B Mast Single Internal Hose Reeving

安装程序 Installation Procedure

1 属具向上提升 Attach overhead hoist

警告:确保起吊设备的额定承载能力不低于1000lbs(450kg)。
WARNING: Make sure overhead hoist has a rated capacity of at least 1000 lbs.(450kg)。

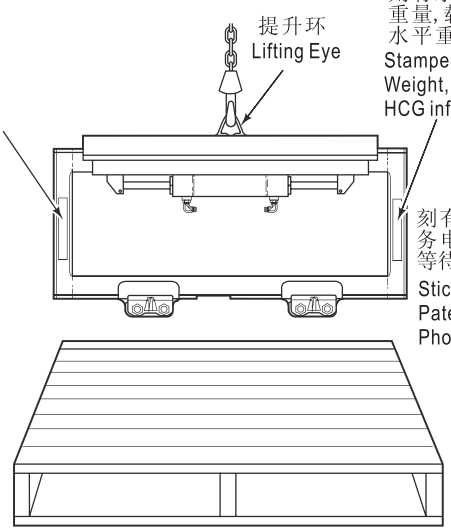

2 卸下螺栓紧固式下钩 Remove bolt-on lower hooks

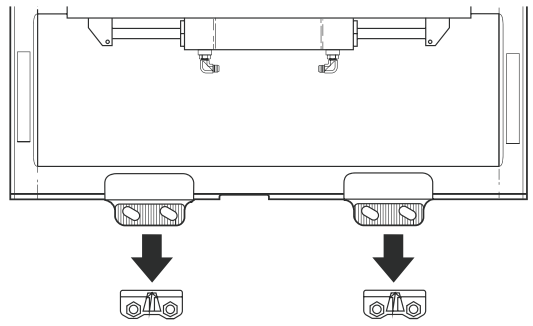

3 将侧移器挂装在叉车货叉架上 Mount Sideshifter on truck carriage

ITA二级-15-17mm　ITA Class Ⅱ-. 60-.66 in.(15-17 mm)
ITA三级-18-20mm　ITA Class Ⅲ-. 72-.78 in.(18-20mm)
ITA四级-18-20mm　ITA Class Ⅳ-. 72-.78 in.(18-20mm)

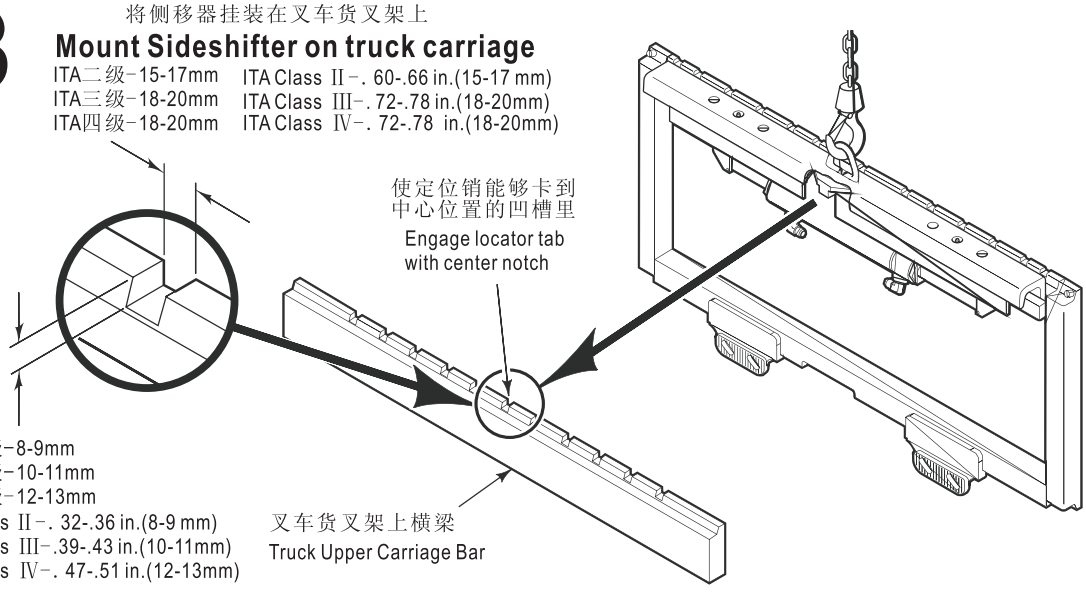

4 下钩安装,螺栓紧固式 Install lower hooks *BOLT-ON*

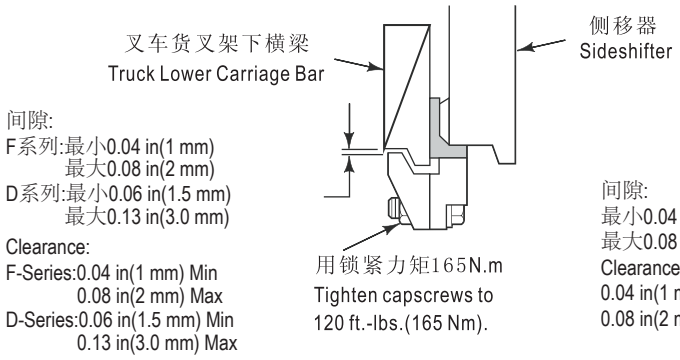

快装型 *QUICK-DISCONNECT*

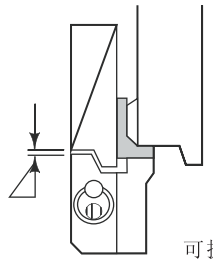

导向块可换向以减少与货叉架之间的间距
Reverse guides to reduce hook-to-carriage clearance

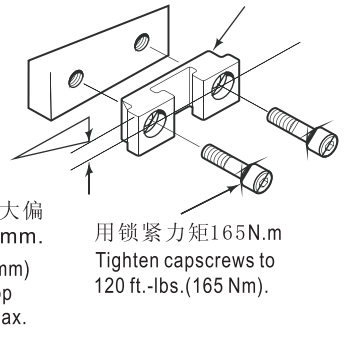

5 冲洗油管 *Flush supply hoses*

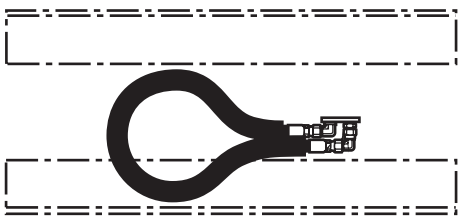

6 安装油管 Install hoses

图示为适配门架内置。
油路的安装组件C-205826
Optional Installation Kit 205826 shown for internal reeving。

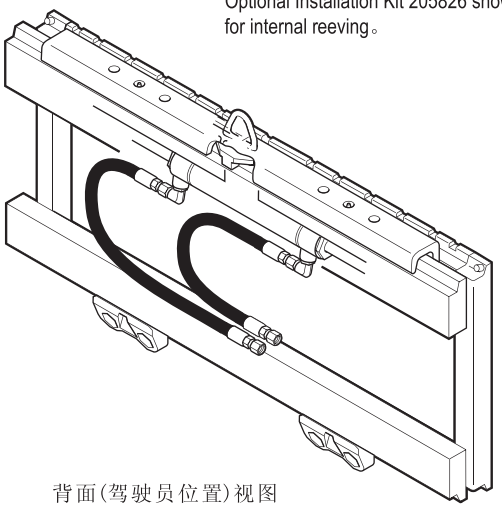

背面(驾驶员位置)视图
Back(Driver's)View

7 安装货叉 Install forks

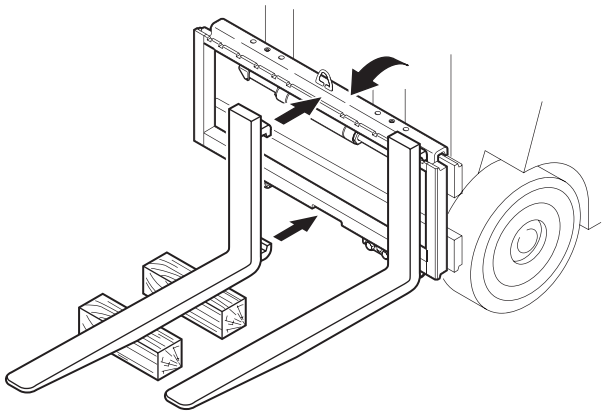

8 安装挡货架 Install backrest

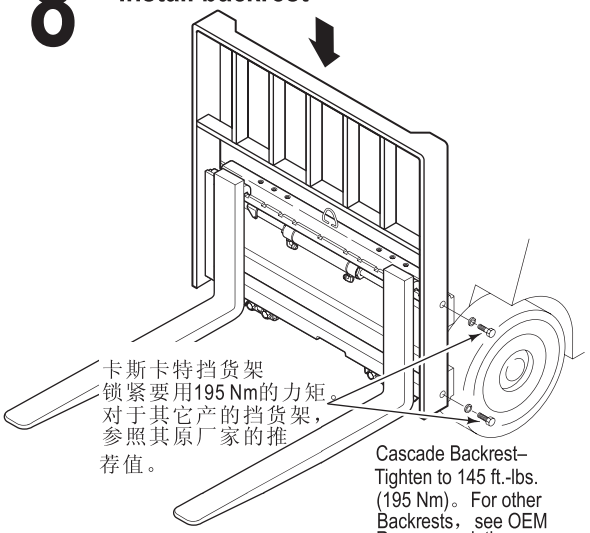

9 润滑下滑块 Lubricate lower bearings

润滑下滑块使用锂基润滑脂。
Lubricate lower bearings with lithium-based chassis grease。

注意：上滑块出厂前，已进行润滑。
挂装不必要再加注润滑脂。
NOTE: Upper bearings are prelubed at the Factory with break-in grease。No lubrication is required during installation。

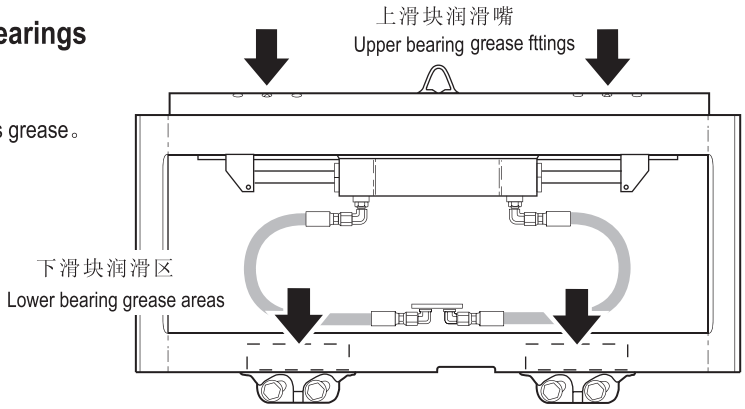

警告:在完成任何检测过程之后，侧移器都要完成5次的往复循环动作。然后空载试车,车投入正常工作之前必须事先负载测试以确保正常工作。

WARNING: After completing any service always test the sideshifter through five complete cycles。 First test with no load，then test with a load to make sure the attachment operates correctly before returning it to the job。

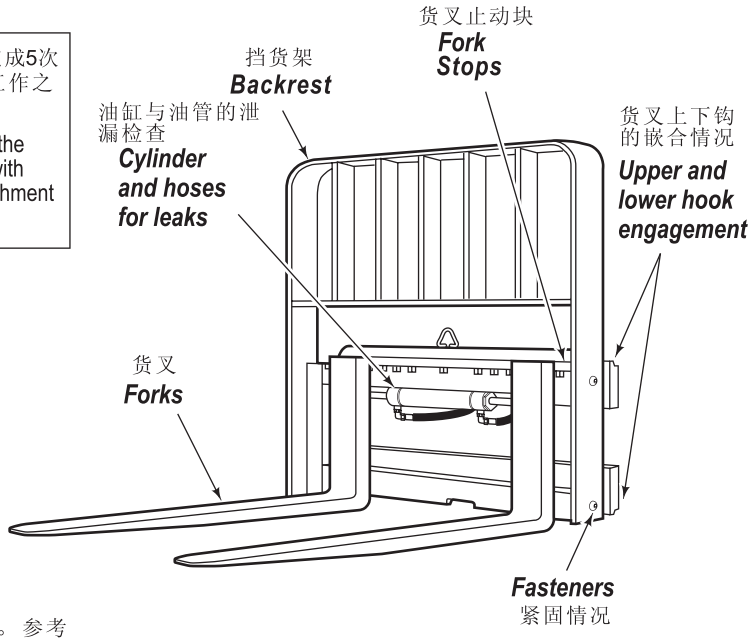

每天保养

每天检查图中所示的检测项目。向你的主管汇报其中相关问题。参考维修手册按照保养和维修程序查出并解决问题。

100小时保养

在每一次叉车进行保养或者叉车每工作100小时，按以下的程序进行保养:

- 检查松动或丢失的螺栓，磨损或损坏的油管，液压油泄漏以及损坏或者丢失的货叉止动块。
- 检查下钩的磨损以及合适的间距。如果需要的话按照安装说明中的第4部进行调整。用165 Nm的力矩锁紧下钩螺栓。

300小时保养

叉车在工作300小时以后，除了已有的100小时保养以外，还要按照以下程序进行保养:

- 用195Nm的力矩锁紧挡货架。
- 用通用的锂基润滑脂对侧移器的上滑动块和下滑动块进行润滑。

1000小时保养

叉车在使用1000小时以后，除了已有的100小时和300保养，还要按照以下程序进行保养:

- 检查上下滑动块的磨损情况。 如果任何滑动块磨损到厚度小于2.5mm时，请将滑动块整个更换。 更换程序按照维修手册中说明进行。
- 检查货叉的磨损情况。**注意**: 货叉维修组件3014162包含了磨损，检测板以及安全标签。同时货叉的钩和货叉架磨损维修组件号209560(二级),和209561(三级)。

Daily

Check items shown each day。 Report problems to your Supervisor。 See Service Manual for troubleshooting，maintenance and repair procedures。

100-Hour

Every time the lift truck is serviced or every 100 hours of truck operation，complete the following maintenance procedures:

- Check for loose or missing bolts，worn or damaged hoses，hydraulic leaks，and damaged or missing fork stops。
- Inspect lower hooks for wear and proper clearance。 Adjust if necessary (see Step 4, Installation)。 Tighten lower hook capscrews to 120 ft.-lbs (165 Nm)。

300-Hour

After each 300 hours of truck operation，in addition to the 100-hour maintenance，perform the following procedures:

- Tighten backrest capscrews (Cascade) to 145 ft.-lbs. (195 Nm)。
- Apply general-purpose lithium-based chassis grease to Sideshifter upper and lower bearings。

1000-Hour

After each 1000 hours of truck operation，in addition to the 100 and 300-hour maintenance，perform the following procedures:

- Inspect upper and lower bearings for wear。 If any bearing is worn to less than 3/32 in。(2.5 mm) thickness，replace the entire bearing set。 See Service Manual for replacement procedure。
- Inspect forks for wear。 **NOTE:** Fork Safety Kit 3014162 is available containing wear calipers，inspection sheets and safety poster。 Also available is fork hook & carriage wear gauge 209560 (Class II)， and 209561 (Class III)。

F系列侧移器总成
F-Series Sideshifter Assembly

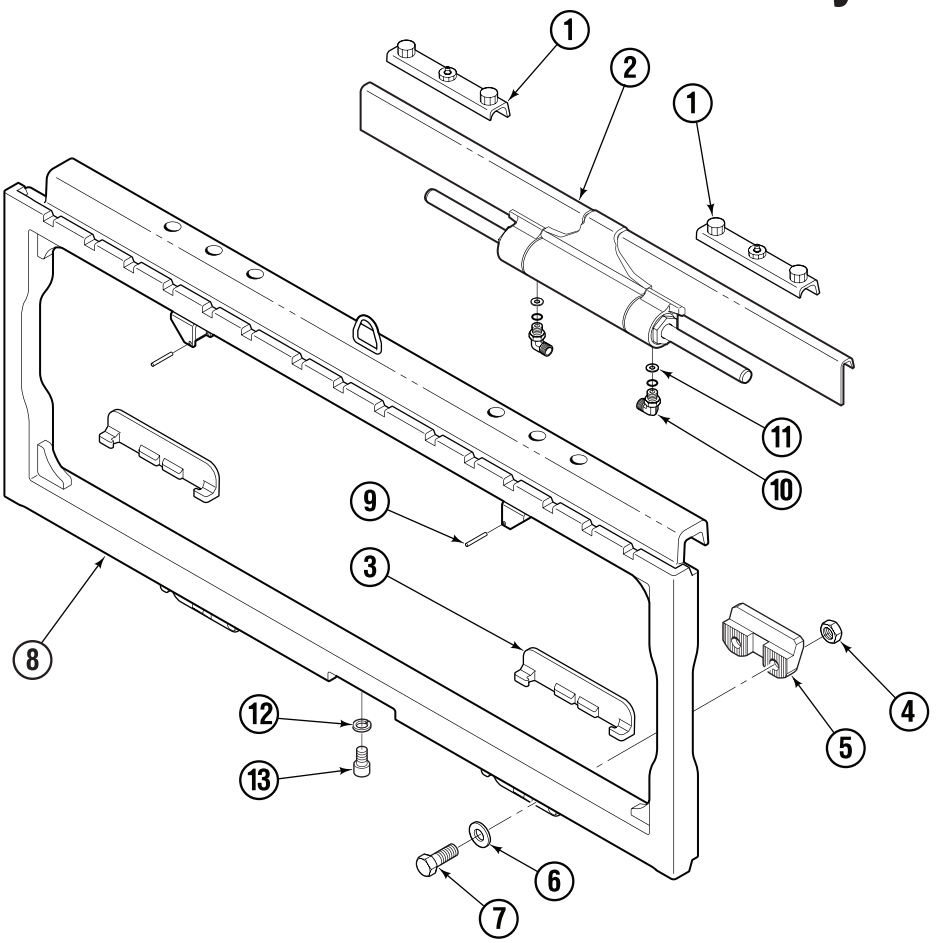

序号 REF	数量 QTY	55F	65F	100F	名称 DESCRIPTION
1	2	228782	6051249	6051249	上滑动块 Upper Bearing
2	1	—	—	—	油缸 Cylinder (See Note 1)
3	2	6000719	6057162	6057162	下滑动块 Lower Bearing
4	4	553857/781534	678990	678990	螺母◆ Nut
5	2	204186	204186	204186	下钩◆ Lower Hook
6	4	667225	667225	667225	垫片◆ Washer
7	4	639121/752903	752903	752903	螺栓◆ Capscrew
8	1	—	—	—	框架● Frame (See Note 1)
9	2	7890	7890	7916	圆柱销Roll Pin
10	2	601676	601676	601676	接头■ Fitting
11	2	221733	221733	221733	节流片▼ Restrictor Washer
12	1	—	—	678991	弹簧垫圈★ Lockwasher,M12
13	1	—	—	768825	螺栓★ Capscrew,M12×20

备注1：组件号依不同型号的侧移器而不同。

●如果框架需要更换，你最经济的方式定购整个侧移器总成。
▲参见油缸页面的拆分图。
◆包含下钩组件: 204182(55F、65F、100F)。
■包括接头组件: 55F(204179)；65F(223774)；100F(204179)。
▼包含节流阀组件:221732(65F、100F)。
★包含中部螺栓组件:6018265(仅限100F)。

Note 1: P/N depends on the different models of sideshifter assembly。

●If the Frame needs replacing,your best value is to order the complete sideshifter assembly。
▲See Cylinder page for parts breakdown。
◆Included in Lower Hook Group : 204182(55F、65F、100F)。
■Included in Fitting Group: 55F(204179); 65F(223774); 100F(204179)。
▼Included in Restrictor Group: 221732(65F、100F)。
★Included in Center Capscrew Group: 6018265(100F only)。

F系列侧移器油缸
F-Series Sideshifter Cylinder

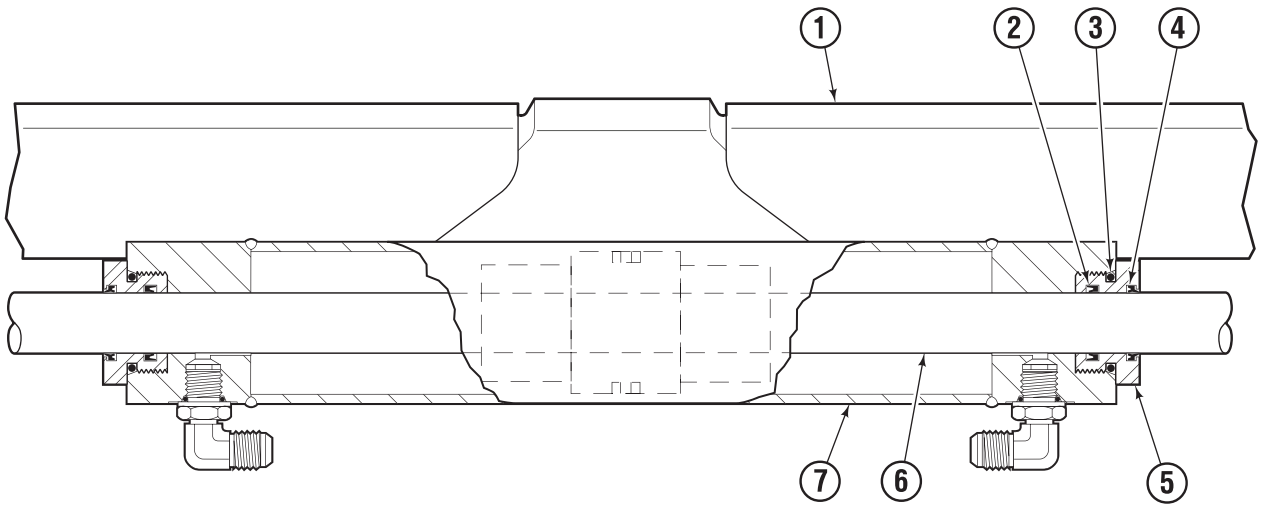

序号 REF	数量 QTY	55F	65F	100F	名称 DESCRIPTION
1	1	—	—	—	油缸总成(见注意1) Cylinder Assembly(See Note1)
2	2	562132	562132	564406	●活塞杆密封圈 Rod Seal
3	2	415866	415866	609241	●O型圈 O-Ring
4	2	562131	562131	564408	●活塞杆密封圈 Rod Wiper Seal
5	2	218324	218324	6056530	导向套 Retainer/Seal Carrier
6	—	■	■	■	活塞杆 Rod/Piston Assembly
7	—	■	■	■	缸筒 Cylinder Shell
		219868	219868	564409	活塞杆密封件 Rod Seal Service Kit

注意1:不同型号的侧移器对应的零件号不同。

●包括维修包: 55F(219868); 65F(564409); 100F(564409)。
■无可维修性: 请订购新的油缸总成。

Note 1: P/N depends on the different models of sideshifter。

● Included in Serivice Kit: 55F(219868); 65F(564409); 100F(564409)。
■ Not serviceable - order new Cylinder Assembly。

D系列侧移器总成
D-Series Sideshifter Assembly

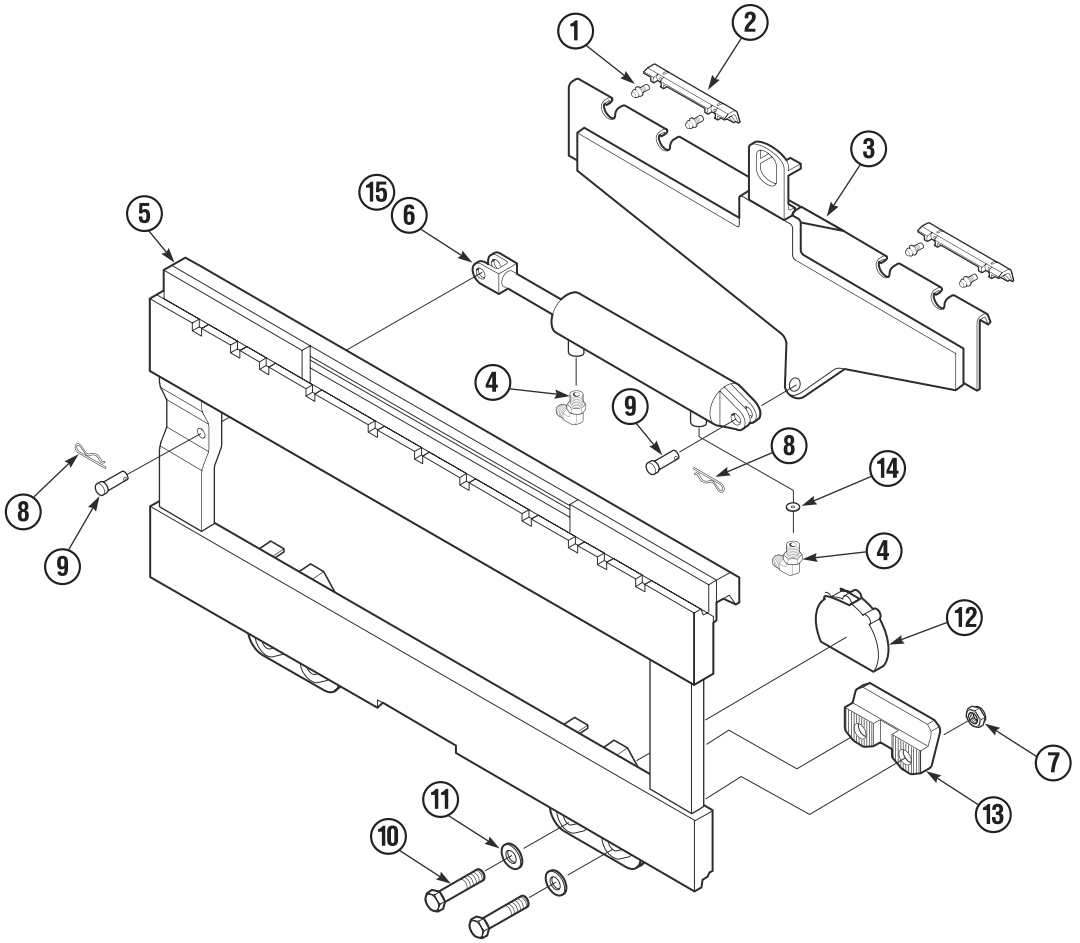

序号 REF	数量 QTY	100D	150D	名称 DESCRIPTION
1	4	7403	—	注油接头 Grease Fitting
2	4	672018	804065	上滑动块 Upper Bearing
3	1	—	—	固定支架 Anchor Bracket
4	2	601676	—	接头 Fitting, 6-6
5	1	—	—	面板 Faceplate
6	1	676649	686243	油缸 Cylinder
7	4	781534		锁止螺母 M16 Nut
8	2	200422	200143	开口销 Cotter Pin
9	2	678528	686215	销 Clevis Pin
10	4	1250077	—	螺栓 Capscrew , M16
11	4	1250067	—	垫圈 Washer
12	3	676650	—	下滑动块 Lower Bearing
13	2	677160	678034	下钩 Lower Hook
14	2	675550	—	节流片 Restrictor Washer
15		553866	561430	油缸维修包Cylinder Service Kit

注意1: 零件号取决于不同型号的侧移器总成
●如果框架需要更换，建议订购侧移器总成。
▲参见油缸的部件拆分图。
◆包含下钩组件: 204182(55F、65F、100F)。
■包括接头组件: 55F(204179)； 65F(223774)；100F(204179)。

Note 1: P/N depends on the different models of sideshifter assembly。
●If the Frame needs replacing，your best value is to order the complete sideshifter assembly。
▲See Cylinder page for parts breakdown。
◆Included in Lower Hook Group : 204182(55F、65F、100F)。
■Included in Fitting Group: 55F(204179)；65F(223774)；100F(204179)。

100D侧移器 油缸总成
100D Sideshifter Cylinder

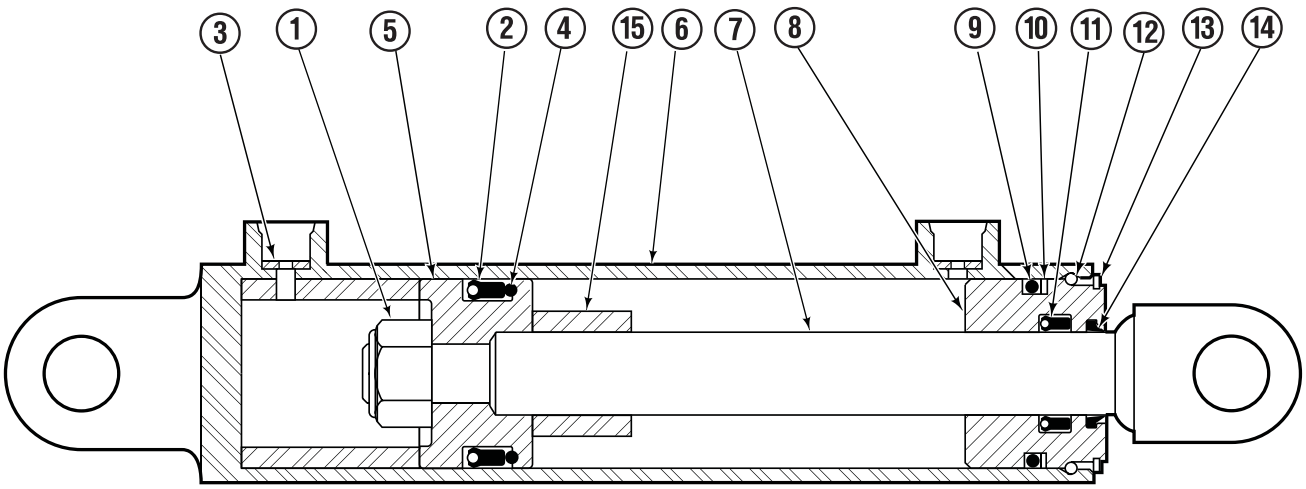

100D-SSS							
序号	数量	零件号	名称	序号	数量	零件号	名称
REF	QTY	PART NO.	DESCRIPTION	REF	QTY	PART NO.	DESCRIPTION
		676649	油缸总成 Cylinder Assembly	9 ■	1	2789	O型密封圈 O-Ring
1	1	553717	螺母 Nut	10 ■	1	615132	挡圈 Back-up Ring
2 ■	1	662456	油封 Seal	11 ■	1	662447	油封 Seal
3	1	675550	垫圈 Washer	12	1	553688	卡圈 Retaining Ring
4 ■	1	649817	挡圈 Back-Up Ring	13	1	200132	轴用挡圈 Snap Ring
5	1	553527	活塞 Piston	14 ■	1	636852	防尘圈 Wiper
6	1	676776	油缸筒 Shell	15	1	—	轴套 Spacer
7	1	553530	活塞杆 Rod	—	—	553866	维修包 Service Kit
8	1	553528	导向套 Retainer				

■该零件包含于维修包553866中。
Included in Service Kit 553866。

150D侧移器油缸总成
150D Sideshifter Cylinder

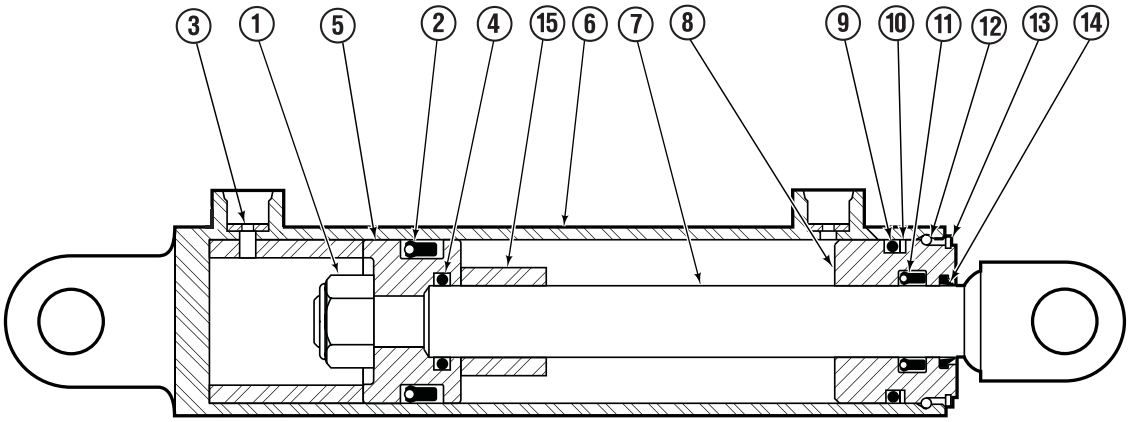

150D-SSS							
序号 REF	数量 QTY	零件号 PART NO.	名称 DESCRIPTION	序号 REF	数量 QTY	零件号 PART NO.	名称 DESCRIPTION
		686243	油缸总成 Cylinder Assembly	9 ■	1	2791	O型密封圈 O-Ring
1	1	561012	螺母 Nut	10 ■	1	615134	挡圈 Back-up Ring
2 ■	1	662457	油封 Seal	11 ■	1	662449	油封 Seal
3	1	564562	缸筒轴肩 Spacer – Head	12	1	561429	卡圈 Retaining Ring
4 ■	1	2718	O型密封圈 O-Ring	13	1	7215	轴用挡圈 Snap Ring
5	1	561427	活塞 Piston	14 ■	1	626468	防尘圈 Wiper
6	1	561419	油缸筒 Shell	15	1	—	活塞杆轴肩 Spacer – Rod
7	1	561422	活塞杆 Rod	—	—	561430	维修包 Service Kit
8	1	561428	导向套 Retainer				

■该零件包含于维修包561430中。
Included in Service Kit 561430。

推荐备件清单 Recommended Spare Parts

55F 零件号 PART NO.	65F 零件号 PART NO.	100F 零件号 PART NO.	100D 零件号 PART NO.	150D 零件号 PART NO.	描述 DESCRIPTION		侧移器台数 UNITS SERVICED 1-5 数量 QTY.	6-19 数量 QTY.	20-50 数量 QTY.
6020486◆	6051249	6051249	672018	672018	上滑块-复合材料	Upper Bearing-Composite	8	16	32
6033486◆	6052405	6052405	804065	804065	上滑块-铜质	Upper Bearing-Bronze	4	8	16
6033487◆	6057162	6057162	676650	676650	下滑块-复合材料	Lower Bearing-Composite	6	12	24
226842 ◆	6058041	6058041	—	—	下滑块-铜质	Lower Bearing-Bronze	4	8	16
204186	204186	204186	677160	678034	下钩	Lower Hook	0	2	4
752903	752903	752903	1250077	1250077	螺栓, M16×45	Capscrew, M16×45	0	4	8
678990	678990	678990	781534	781534	螺母 M16	Nut M16	0	4	8
667225	667225	667225	1250067	1250067	垫圈	Washer	0	4	8
■	■	■	676649	686243	油缸总成	Cylinder Assembly	0	0	1
219868	219868	564409	552866	561430	油缸维修组件	Cylinder Service Kit	1	2	4

维修组件包含两种不同的支承。详细参见支承替换。
◆ Kit containing two each of two different style bearings。 Match the bearing being replaced。

可依照零件上面的零件号或在侧移器框架表面的产品序列号来购买备件。
■ Refer to part number stamped on part or supply serial number stamped on sideshifter frame when purchasing parts。

质 量 保 证 政 策

感谢您选用卡斯卡特（厦门）叉车属具有限公司产品。为了充分保障您的权益，请认真阅读本质量保证政策。
以下：“卡斯卡特（厦门）公司”指卡斯卡特（厦门）叉车属具有限公司；“购买商”指直接与卡斯卡特（厦门）公司签订产品购销合同的叉车主机厂或获得叉车主机厂授权的代理商
卡斯卡特（厦门）公司：保证其产品符合卡斯卡特（厦门）公司所提供的有效的产品购销合同、报价单、产品手册中所列有关性能参数的要求。
卡斯卡特（厦门）公司全新产品：包括属具、货叉、卷管器和配件，质量保证期为卡斯卡特（厦门）公司货交第一承运人之日起24个月或该产品使用4000小时。以上述两项中先到期限者为准。
卡斯卡特（厦门）公司绿萌系列再制造产品：质量保证期为卡斯卡特（厦门）公司货交第一承运人之日起6个月或该产品使用1000小时。以上述两项中先到期限者为准。
本政策中，“质量保证”的含义是：卡斯卡特（厦门）公司将对于获得其书面授权人员检查后确认在材料或制造工艺方面存在缺陷的任何零部件进行修理或更换。
购买商、最终用户应做到：
1. 在对卡斯卡特产品进行安装、调试、使用和保养时，必须严格按照相关的卡斯卡特安装说明书、检测规范、操作指南和维修手册的规定进行操作。
2. 只有在获得卡斯卡特（厦门）公司的书面授权后，方可对所购的卡斯卡特公司产品进行修理，但不能拆除或更换产品上的零部件。
任何在未经卡斯卡特（厦门）公司书面授权的情况下对卡斯卡特产品所作的修理、改动，或使用非卡斯卡特（厦门）公司原厂提供的零部件，或违反卡斯卡特安装说明书、检测规范、操作指南和维修手册中的有关规定，都将导致失去享受本质量保证政策的权利。
注意事项：
1. 卡斯卡特（厦门）公司对于使用其产品进行超出该产品适用工况的特殊作业导致的产品损坏或任何非正常状况不予保修。
2. 当购买商或最终用户已拥有或虽未拥有但已开始使用本公司产品后，发生的该产品丢失、该产品使用中对人身或财产造成损失或损害（包括间接损失或损害），卡斯卡特（厦门）公司均不承担责任。
3. 产品正常使用中的磨损、消耗、未按卡斯卡特（厦门）公司操作指南而进行非正常使用、以及正常或定期的维护保养工作，不享受本质量保证政策。
4. 超出本质量保证政策内容及卡斯卡特（厦门）公司购销合同上所述的产品相关条款外的情况，均不享受本质量保证政策。

最终用户如果需要进一步了解卡斯卡特（厦门）公司产品或安装及修理方面的事宜，请首先向售出该产品的叉车主机厂或其代理商咨询。
卡斯卡特（厦门）公司也非常乐意解答您在这方面的任何问题。请洽：卡斯卡特（厦门）叉车属具有限公司服务与配件处 电话：40088 57315

本质量保证政策自2013年9月24日起生效。在新的质量保证政策颁发前，本政策一直有效。卡斯卡特（厦门）公司保留对本政策进行修改的权利，届时恕不一一通知。请注意本政策页面下端的版本号。

版本号：Cascade Xiamen 2013

Warranty

Thank you very much for your purchasing Cascade products, in order to fully guarantee your rights and interests, please read the c ontent of this Warranty carefully.

In this article, hereafter, "Cascade Xiamen" means Cascade Xiamen Forklift Truck Attachment Co., Ltd.;"Buyer" means the forklift truck OEM (Original Equipment Manufacturer) or its authorized Dealer who signs purchasing contract with Cascade Xiamen directly for its product.

Cascade Xiamen: warrants its products to conform to published specifications as found in its valid sales contracts, quotations, brochures, price lists.

Cascade Xiamen New Products: consisting of attachments, forks, hose reels and service parts are warranted for 24 months following the date of delivery to the primary carrier, or 4000 hours of operation, whichever terminates first alternatively.

Cascade Xiamen Remanufactured Products: are warranted for 6 months following the date of delivery to the primary carrier, or 1000 hours of operation, whichever terminates first alternatively.

Within the policy, "Warranty" means Cascade Xiamen will repair or replace, at its option, any part that a Cascade Xiamen itself or authorized inspection reveals to be defective in materials or workmanship.

What Buyers and Customers must do:

1. To preserve Cascade Xiamen's Warranty, Buyers and Customers must carefully follow applicable Cascade Installation Instructions, Service Manuals and Operator Guides when installing, adjusting, maintaining and operating Cascade equipment.
2. Buyers, Customers must obtain Cascade Xiamen written authorization for repairs other than removal or replacement of defective parts.

Any unauthorized repairs or alterations, use of parts not provided by Cascade Xiamen, or failure to follow Cascade's Installation Instructions, Service Manuals and Operator Guides will result in loss of Warranty.

Notice:

1. Cascade Xiamen does not warrant that its products will perform any particular task which conditions are not suitable for the product.
2. Cascade Xiamen assumes no responsibility for loss, damage or injury to persons or property, or for consequential damages, resulting from the possession or use of its products.
3. Cascade Xiamen's Warranty does not cover wear, tear, abnormal applications which fail to follow Cascade Xiamen product Operator’s Guide properly, normal or scheduled maintenance.
4. **THERE ARE NO WARRANTIES EITHER EXPRESS OR IMPLIED INCLUDING ANY WARRANTY OF FITNESS FOR A PARTICULAR PURPOSE WHICH EXTEND BEYOND THOSE STATED IN THIS WARRANTY AND THE PRODUCT DESCRIPTION ON THE FACE OF CASCADE XIAMEN'S ORDER ACKNOWLEDGEMENT.**

If the end user customer would like to know more about Cascade Xiamen product or the relevant aspects of installation and service, please firstly consult with the forklift truck OEM or its Dealer who sold the product.

Cascade Xiamen is also very happy to answer any of your questions on this. Please contact: Service and Spare Parts Department, Cascade Xiamen Forklift Truck Attachment Co., Ltd. Phone: 40088 57315

This Warranty's effective since September 24, 2013. Its validity remains until being superceded by a later version. Cascade Xiamen reserves all the rights of amendment without notice. Please note the Version No. at the bottom of this page.

Version No.: Cascade Xiamen 2013

cascade corporation

www.cascorp.com.cn

卡斯卡特（厦门）公司保留对本手册修改的权利，如有修改，恕不另行通知。Cascade Xiamen reserves the rights to make change without notice.

1210984 R6 xm cn 06/2019