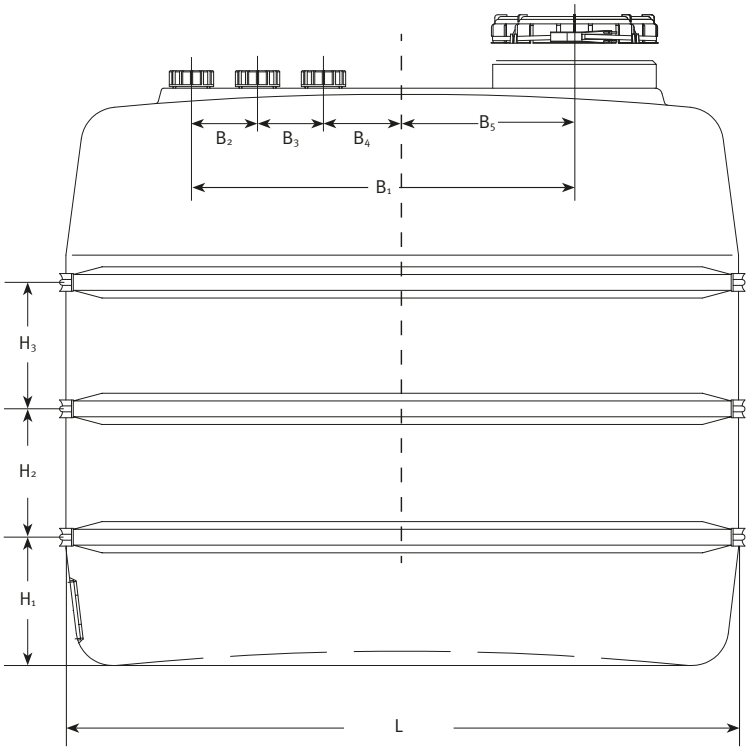

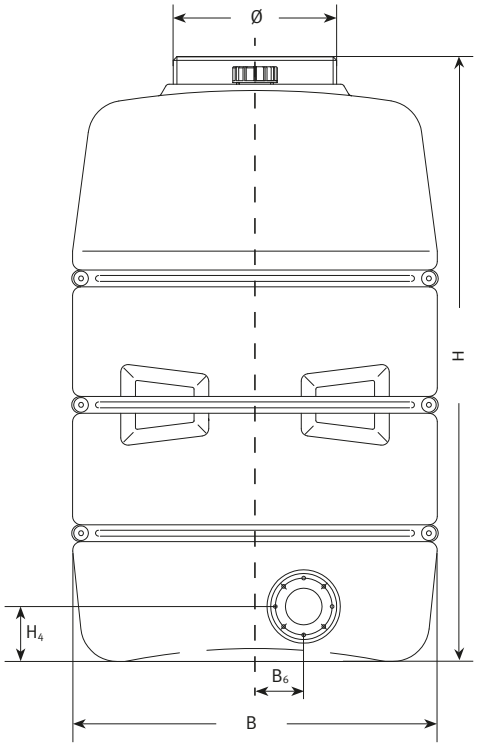

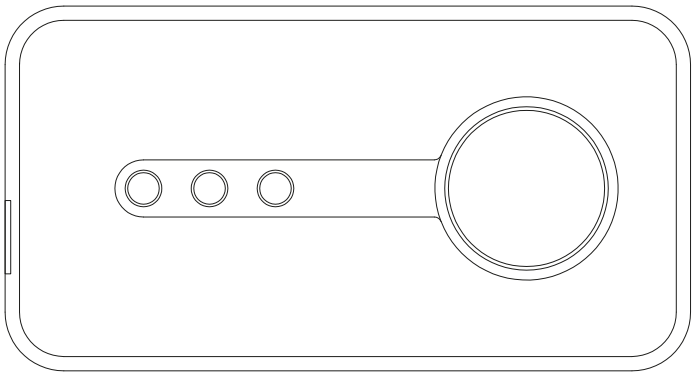

Detail des Stutzen
Close-up view socket
Vista detallada
Vue détaillée

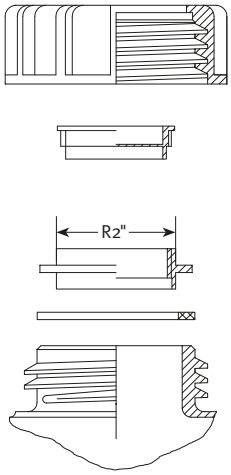

Inhalt Volume Capacidad Capacité	L	B	B_1	B_2	B_3	B_4	B_5	B_6	H	H_1	H_2	H_3	H_4	Ø	Gewicht Weight Peso Poids
2.500 l (660.4 US gal.)	**1870 mm** (73.6 Inch)	**995 mm** (39.2 Inch)	**1045 mm** (41.1 Inch)	**180 mm** (7.1 Inch)	**180 mm** (7.1 Inch)	**215 mm** (8.5 Inch)	**470 mm** (18.5 Inch)	**133 mm** (5.2 Inch)	**1650 mm** (65.0 Inch)	**350 mm** (13.8 Inch)	**350 mm** (13.8 Inch)	**345 mm** (13.6 Inch)	**150 mm** (5.9 Inch)	**446 mm** (17.6 Inch)	**115 kg** (253.5 lbs)

D

Raumspartank 2.500 Liter

Artikel-Nr.
product no.
article no.
articulo no.
849230 / 849231

GB	ES	FR	revision
Space-saving tank 2.500 l	Déposito Maische 2.500 l	Citerne de stockage 2.500 l	

gezeichnet drawn	AFE	Gewicht weight	
Datum date	06.2016	Toleranz tolerance	+/- 3%
Maßstab scale		Einheiten units	mm [inch] gal. = US gal.

Otto Graf GmbH
Carl-Zeiss-Str. 2-6
DE-79331 Teningen
mail@graf.info
www.graf.info